PORTFOLIO

Lucas Rambo
MS, BS Mechanical Engineering

Personal Info

Education:

- BS Mechanical Engineering, Mechatronics Concentration, Cal Poly SLO
- MS Mechanical Engineering, Cal Poly SLO (In Progress)

Hometown: Charlottesville, VA

Hobbies:

- Surfing, guitar, tennis, anything that gets me outside

I hope this brief introduction to a few of my projects gives insight into my experience and abilities as a Mechanical Engineer.

Rocket Engine

- Goal: Design, build, and test a rocket engine in under 10 weeks

Rocket Engine

Design Overview

- 18 lbf thrust, 220 psig chamber pressure
- Liquid Ethanol and GOx fuel
- Aluminum heat sink chamber design
- Copper crush gasket and O-ring sealing for chamber and injector components

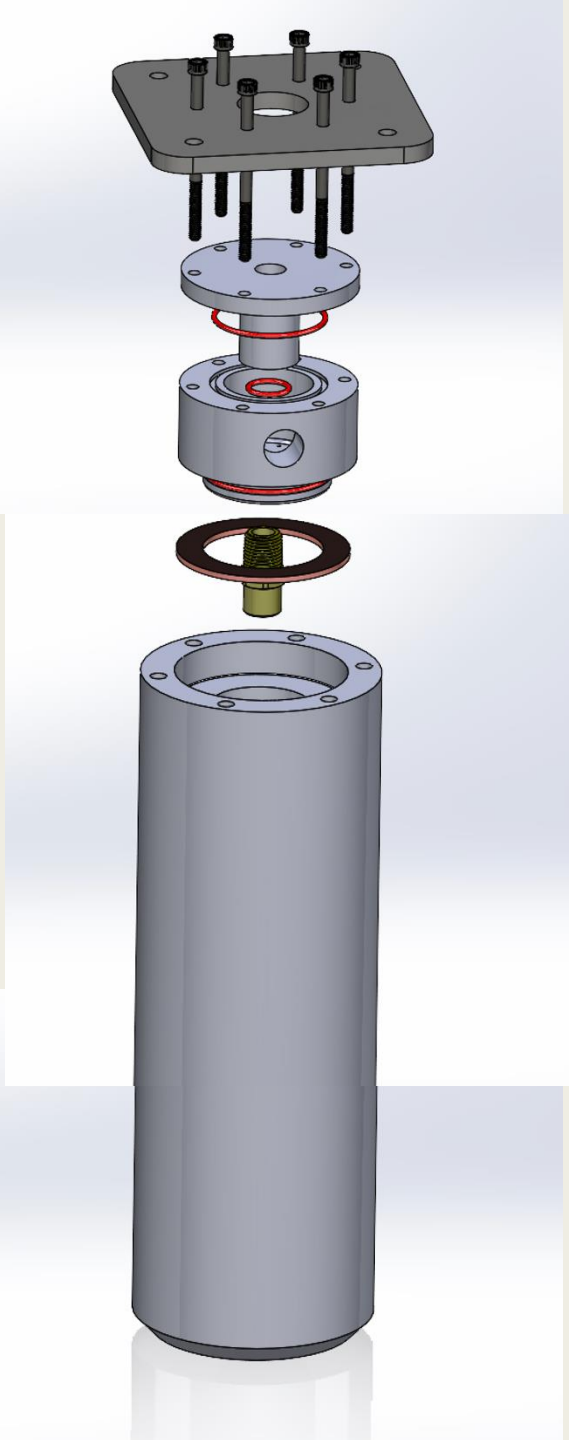

Rocket Engine

Design

- All nozzle and chamber design equations implemented in isentropic flow model to derive geometry
- Rocket Propulsion Analysis (RPA) software used to cross check design results and refine engine parameters
- Ethanol and Gox injectors designed based on engine and test stand parameters

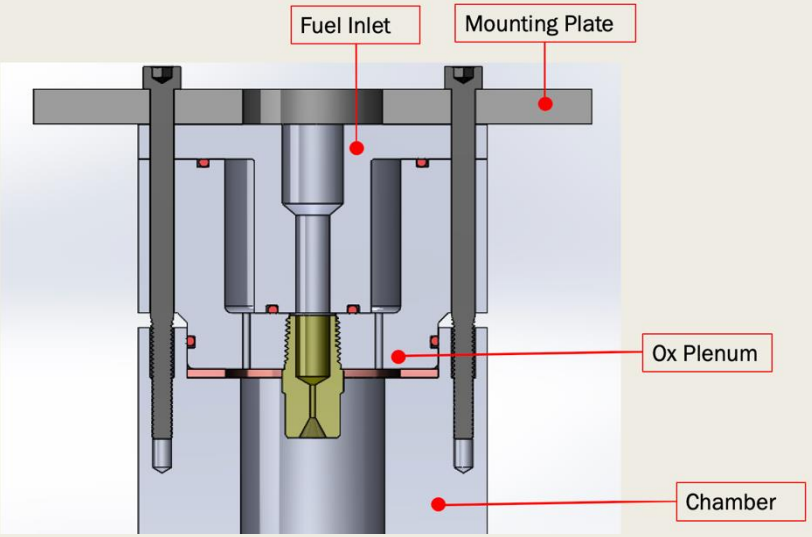

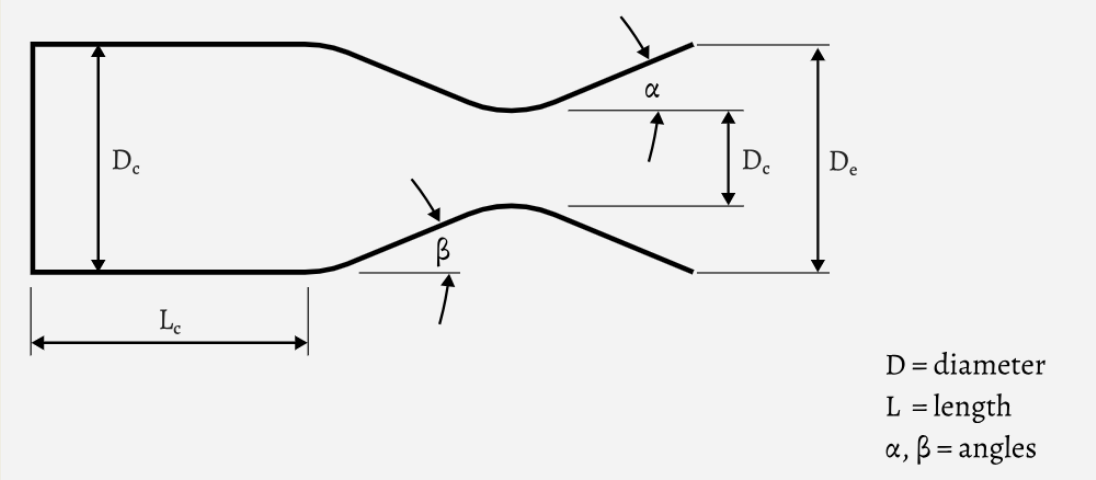

Rocket Engine

Analysis

- Joint analysis for assembly preload to withstand operational pressure and temperature loading
- Stress FEA to verify each component's strength under operational loads
- Transient thermal FEA to determine hot fire test durations

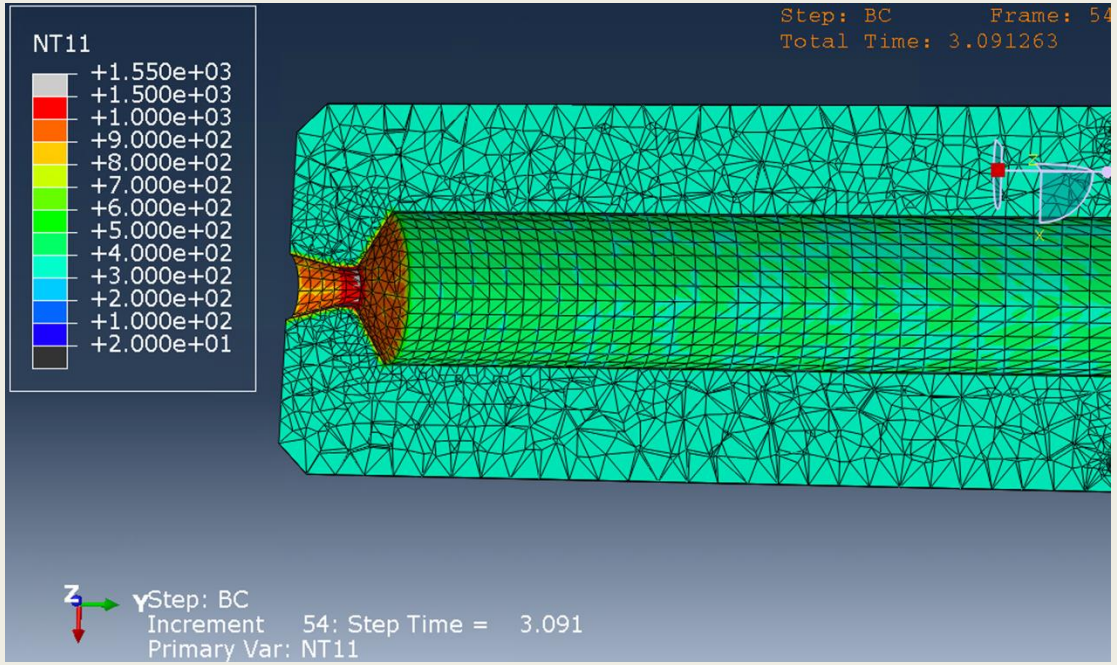

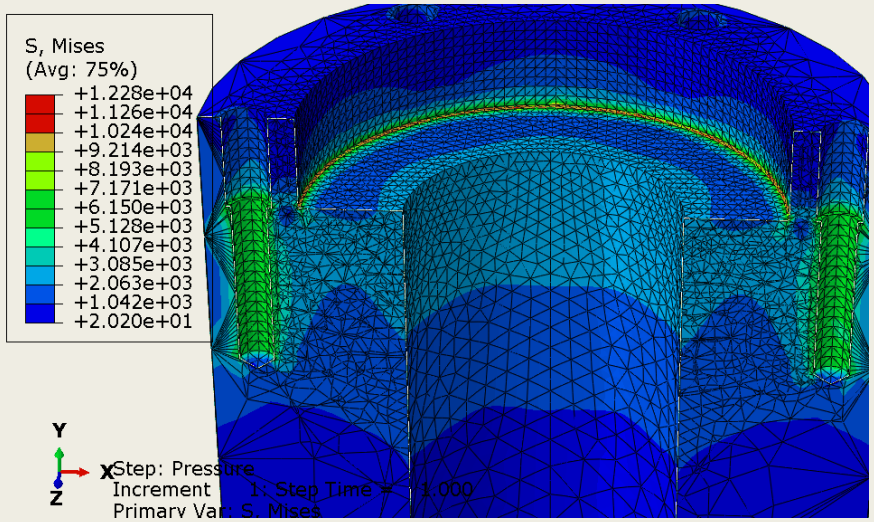

Rocket Engine

Manufacturing and Testing

- Manual Mill and Lathe to manufacture engine components
- Hydrostatic testing to verify injector seals
- Hot fire test (coming soon!)

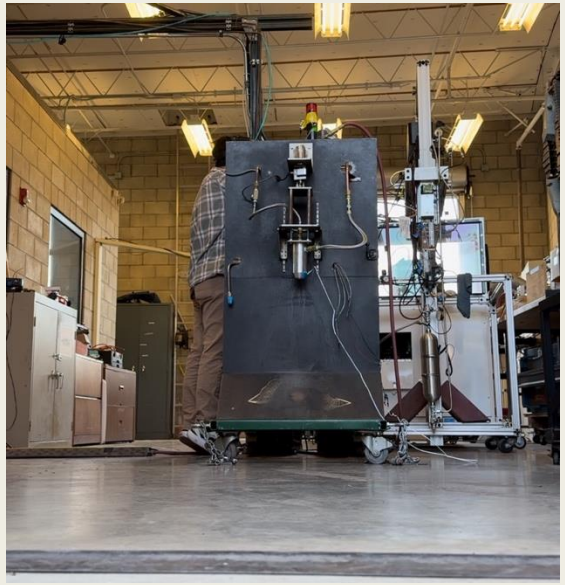

Simulation of Thermal Conductivity

- Goal: Computationally determine effective thermal conductivity of porous solid

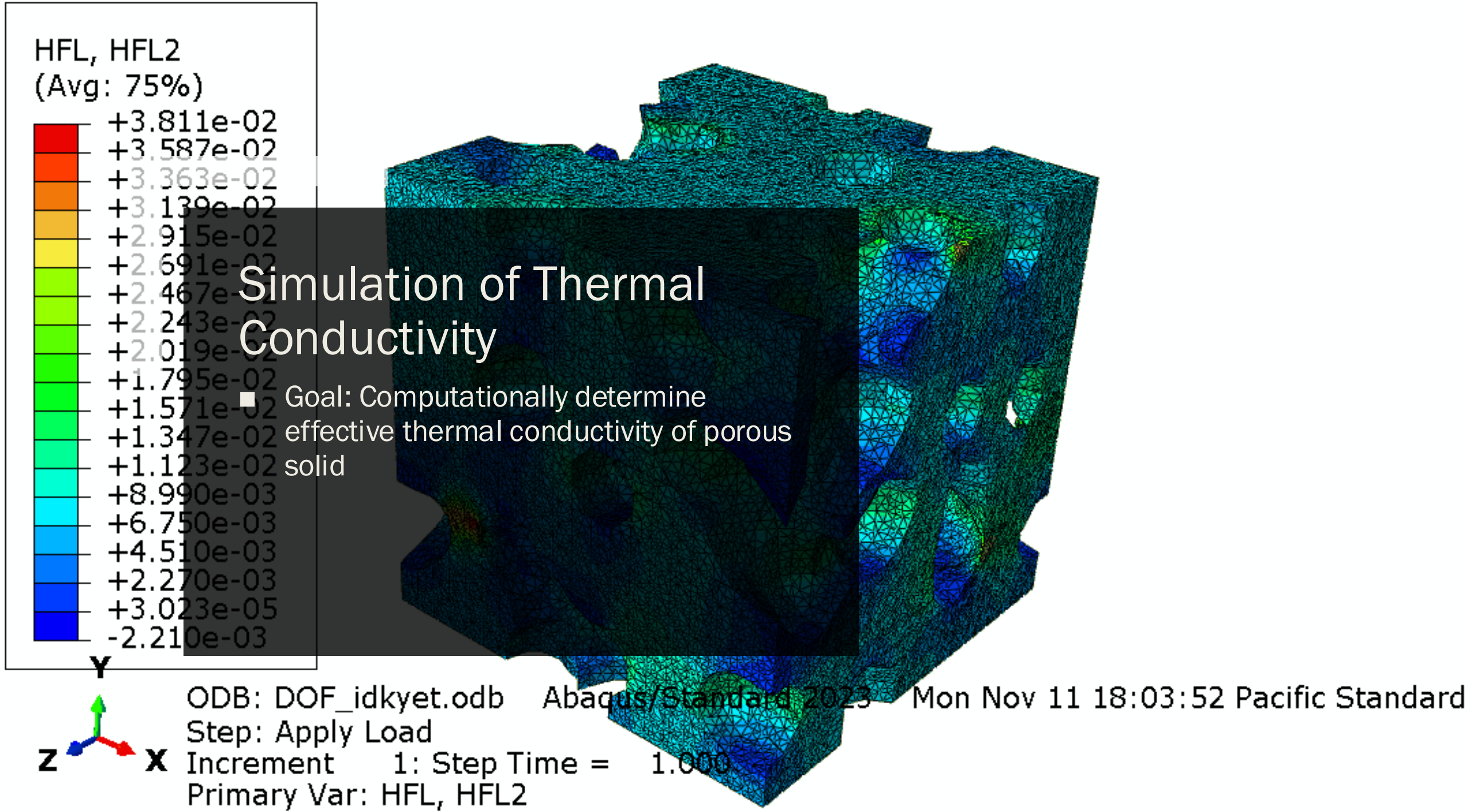

Simulation of Thermal Conductivity

Modeling: Governing equation: $q = \frac{kA(T_1 - T_2)}{L}$

- 75% relative density
- Additively manufactured AL10000
- Boundary conditions:
  - Zero heat-flux boundary conditions on sides
  - Bottom surface heat flux load
  - Top surface prescribed temperature
- Steady state model

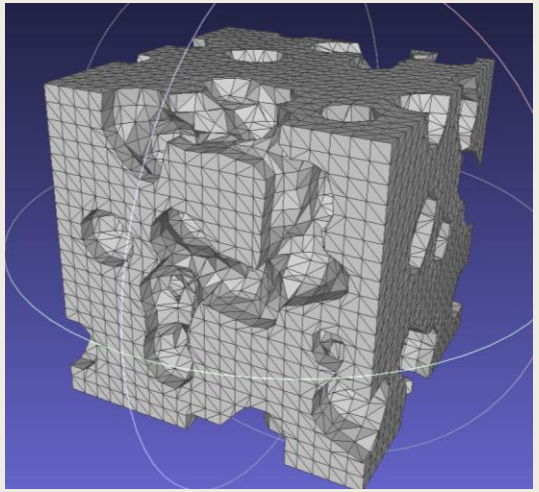

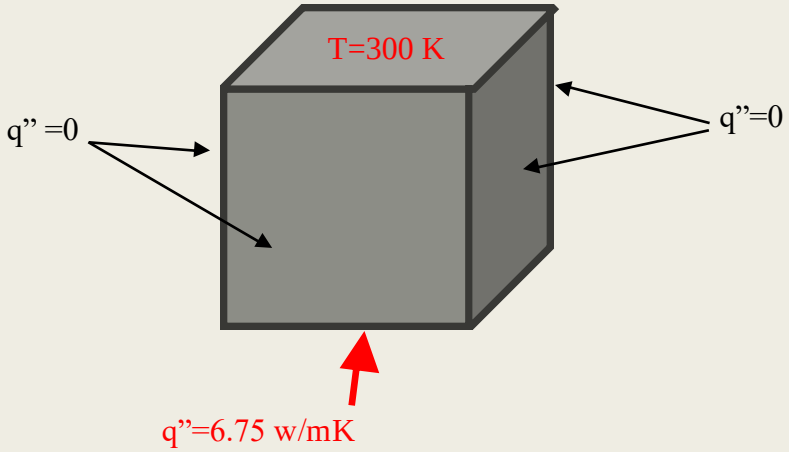

Simulation of Thermal Conductivity

Analysis:

1. PuMa: Generated random porous structure
   a. Determined representative volume through iterative structure generation
2. Fusion 360: Refined STL for simulation efficiency
3. Abaqus: Built and solved thermal model
   a. Performed mesh study to verify solution convergence
   b. Applied boundary conditions and flux load
   c. Solved for steady state temperature distribution
   d. Used Fourier's law to solve total heat flow, then effective thermal conductivity
4. Results verified with Landauer's relations, a simplified analytical model

$$\lambda^{eff} = \frac{1}{4}[\lambda_p(3v_p - 1) + \lambda_s(2 - 3v_p) + \left\{[\lambda_p(3v_p - 1) + \lambda_s(2 - 3v_p)]^2 + 8\lambda_s\lambda_p\right\}^{\frac{1}{2}}]$$

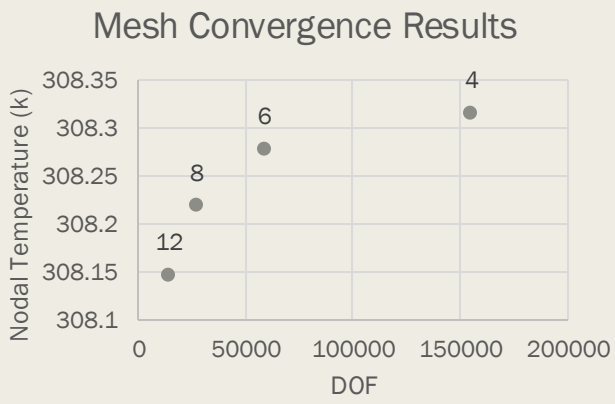

Simulation of Thermal Conductivity

Results:

Parameter	Value [w/mK]
k_{AL1000}(Solid)	217
$k_{Eff,\ Simulated}$	130.54
$k_{Landauer}$	135.64

Learning Outcomes:
Heat transfer analysis,
FEA, FEA data postprocessing

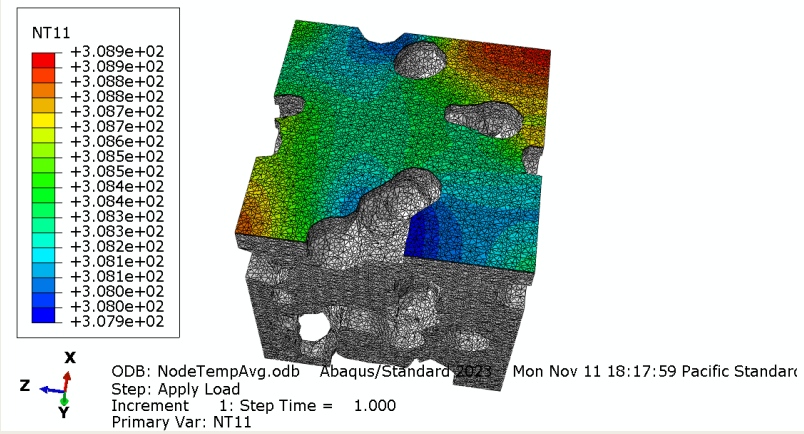

Bottom Surface Nodal Temperatures

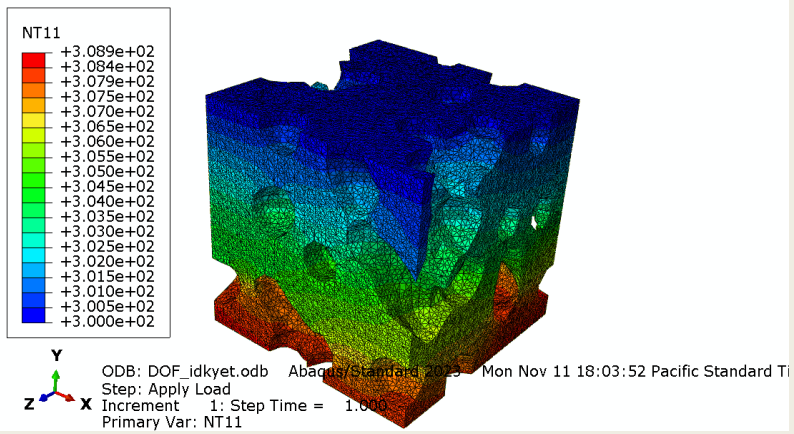

Nodal Temperatures

Aircraft Structures Design

- Goal: Design and analyze aircraft fuselage cross section

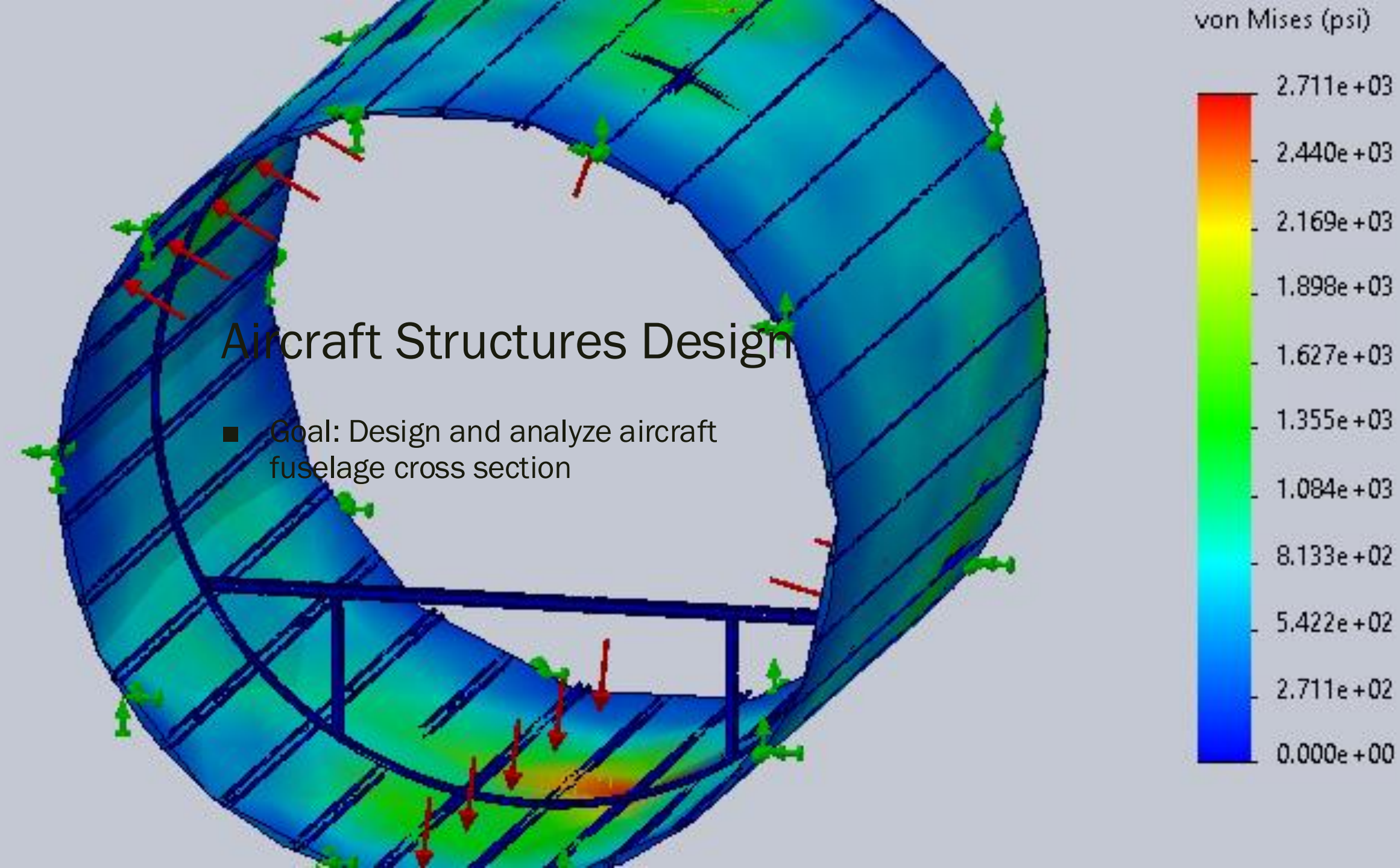

Aircraft Structures Design

- Designed aircraft skin, frame, stringer, and floor beam for FOS 1.25-1.4 based on yield
- Chose material and geometry to minimize cost and weight
- Simulated in SolidWorks FEA

Learning Outcomes: SolidWorks FEA, load case analysis, static stress modeling, design for strength and stiffness

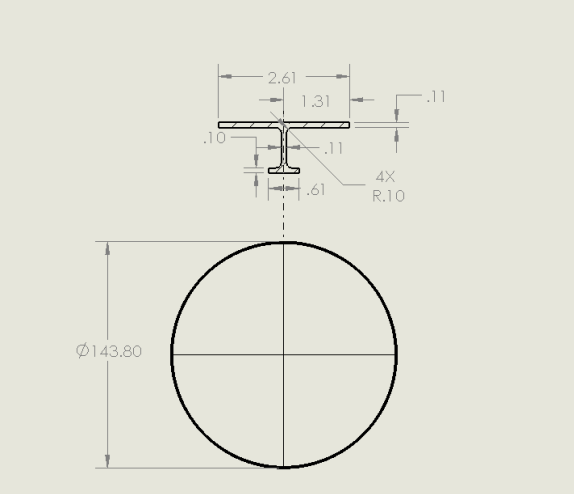

Frame dimensions

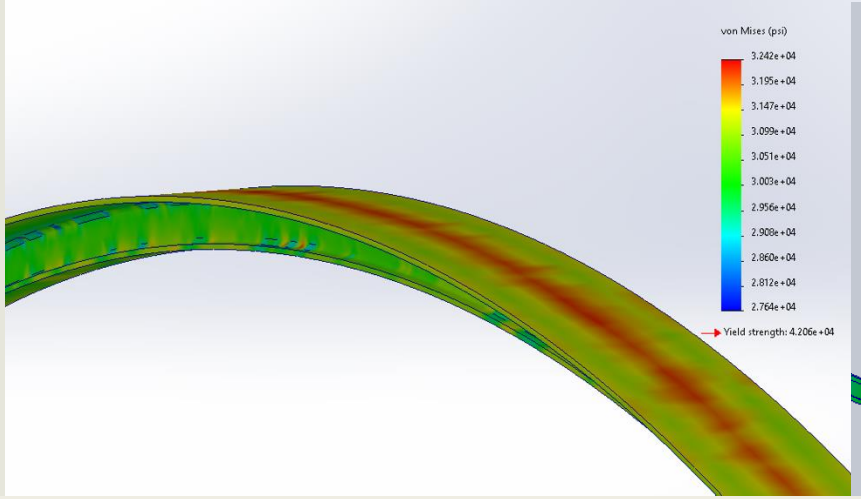

Fram FEA results

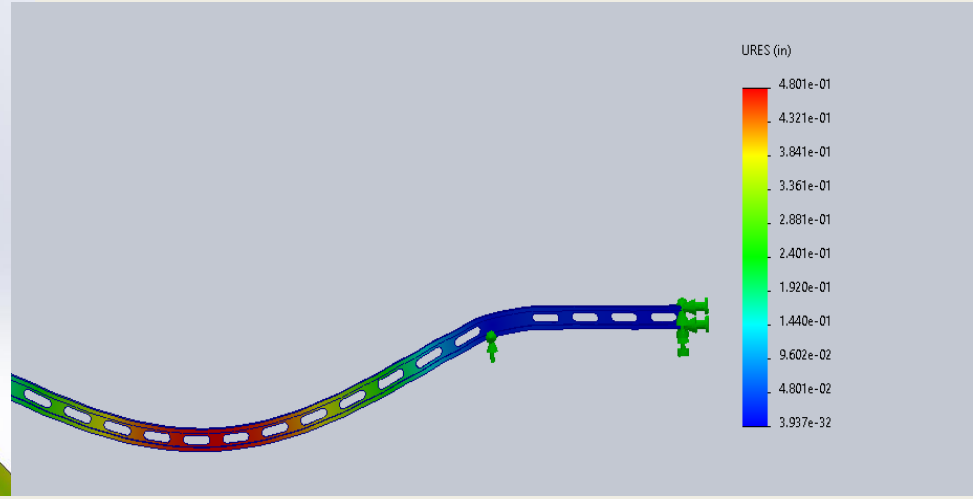

Floor beam FEA results

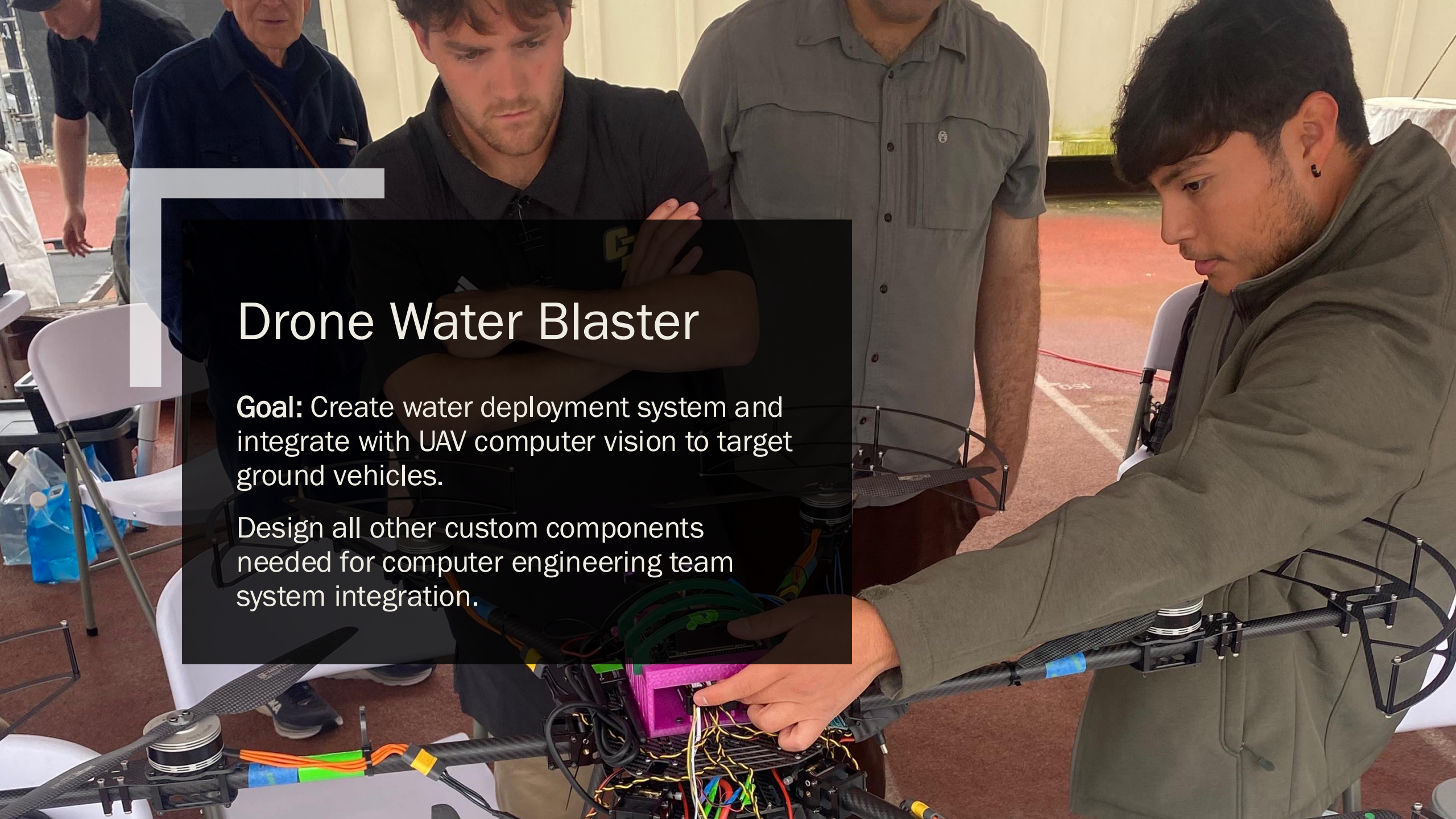

Drone Water Blaster

Goal: Create water deployment system and integrate with UAV computer vision to target ground vehicles.

Design all other custom components needed for computer engineering team system integration.

Drone Water Blaster

Design: Machined Delrin pressure tank with outlet control system.

Features: Inlet port for water filling, pressure port for pumping up, outlet assembly for water delivery, sealed with O-ring

Design Considerations: Total weight, volumetric flow rate, exit velocity, maximum pressure, ability to iterate shot characteristics

Pressure vessel Assembly model

Early PVC prototype and proof of concept testing

Outlet assembly: Adjustable pressure regulator, solenoid, directed flow nozzle.

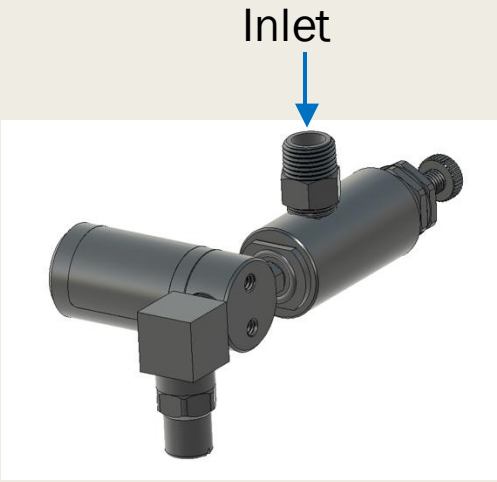

Drone Water Blaster

Analysis:

- Pipe flow analysis for chamber pressure and outlet component selection given desired velocity and flow rate
- Pressure vessel analyses: Hand calcs for general sizing,

  FEA design verification

Testing:

- Ensured chamber held necessary pressure for required duration
- Confirmed flow rates and tuned shot timing and outlet pressure
- Confirmed control system integration with flight computer

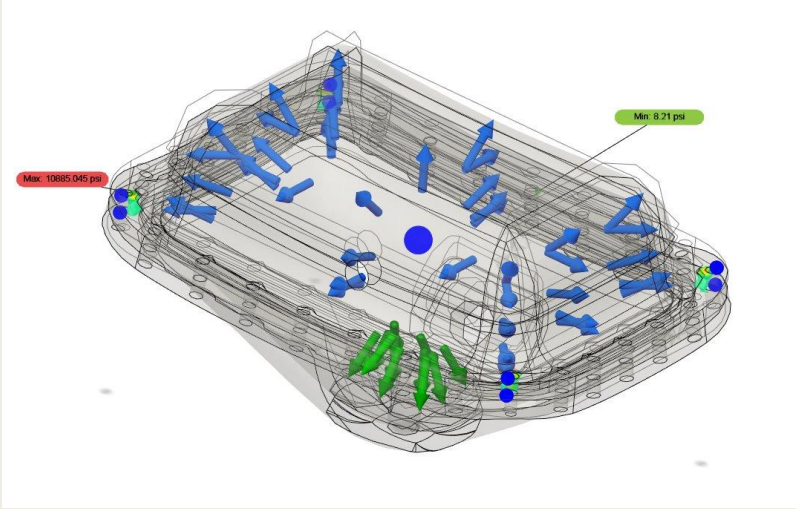

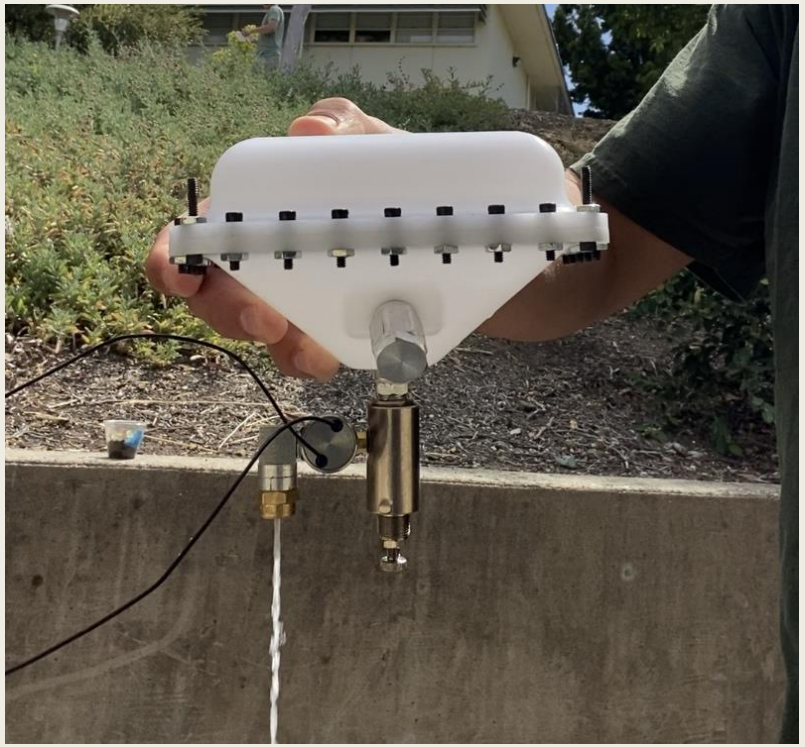

Drone Water Blaster

Result: Water system was delivered on time and met requirements. All auxiliary components needed for integration with CPE team parts (shown to right) were also designed and assembled on the drone.

Learning Outcomes: Pressure vessel design, fluid system design, rapid iteration, actuators and controls

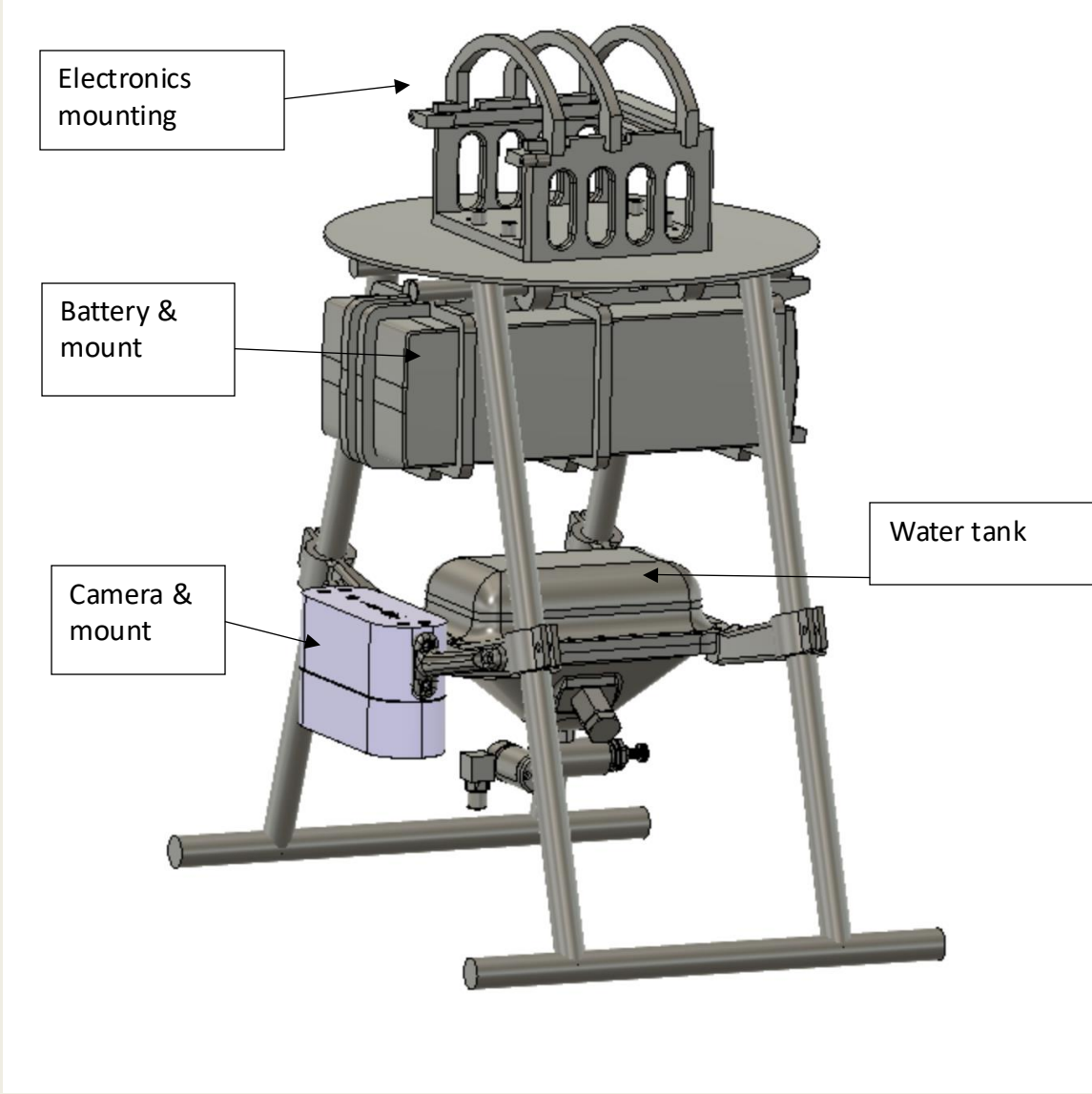

Created a control system to integrate with main computer. Arduino MCU received serial commands and actuated relay to valve.

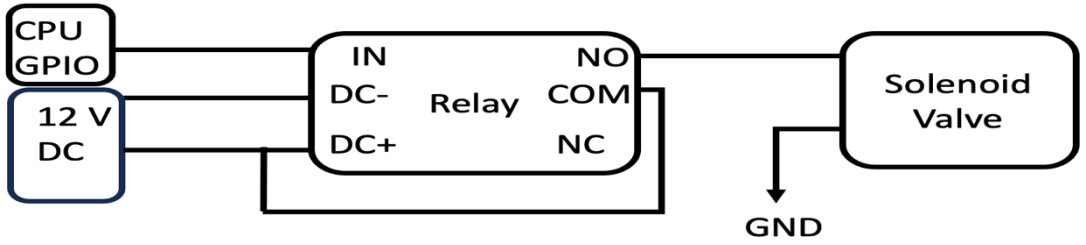

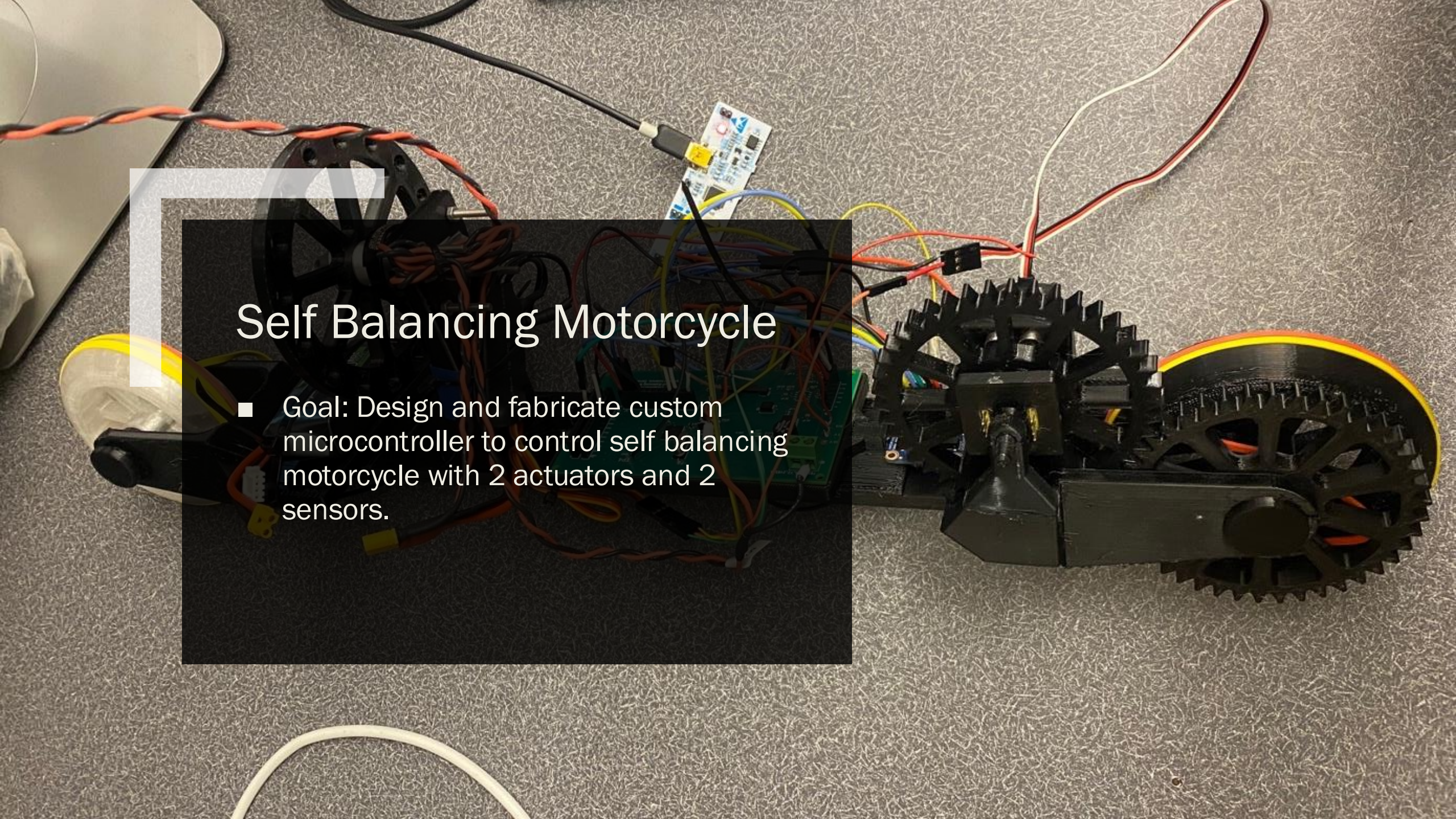

Self Balancing Motorcycle

- Goal: Design and fabricate custom microcontroller to control self balancing motorcycle with 2 actuators and 2 sensors.

Self Balancing Motorcycle

Design Overview:

- **PCB:** Microcontroller based around STM32 CPU. Integrated inertial measurement unit for tilt sensing and components to distribute power to actuators, sensors, and CPU.
- **Mechanical Design:** Fully 3-D printed PLA body with rear wheel servo drive and brushless DC motor reaction wheel.
- **Control System:** PID control system implemented in C for inverted pendulum control of motorcycle tilting.

Self Balancing Motorcycle

Microcontroller: Designed in Fusion360

MCU: STM32F411CEU6
IMU: LSM6DSO32TR
Buck Regulator: ADP2302ARDZ-5.0-R7
LDO: MIC5365-3.3YC5-TR

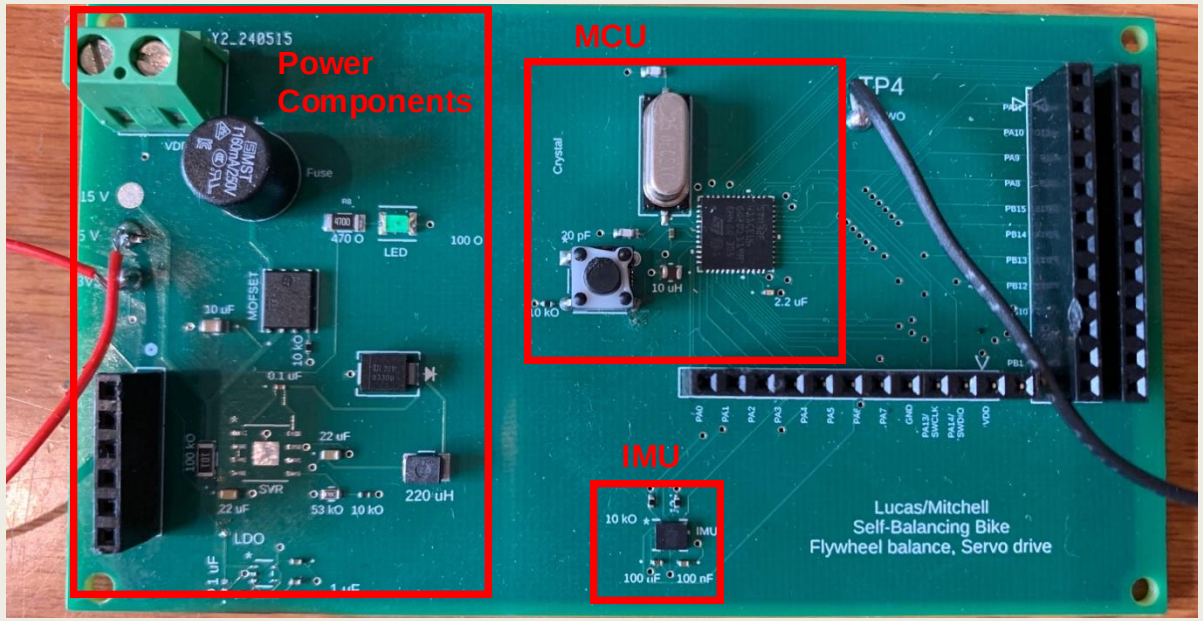

Manufacturing: All component soldering performed by hand

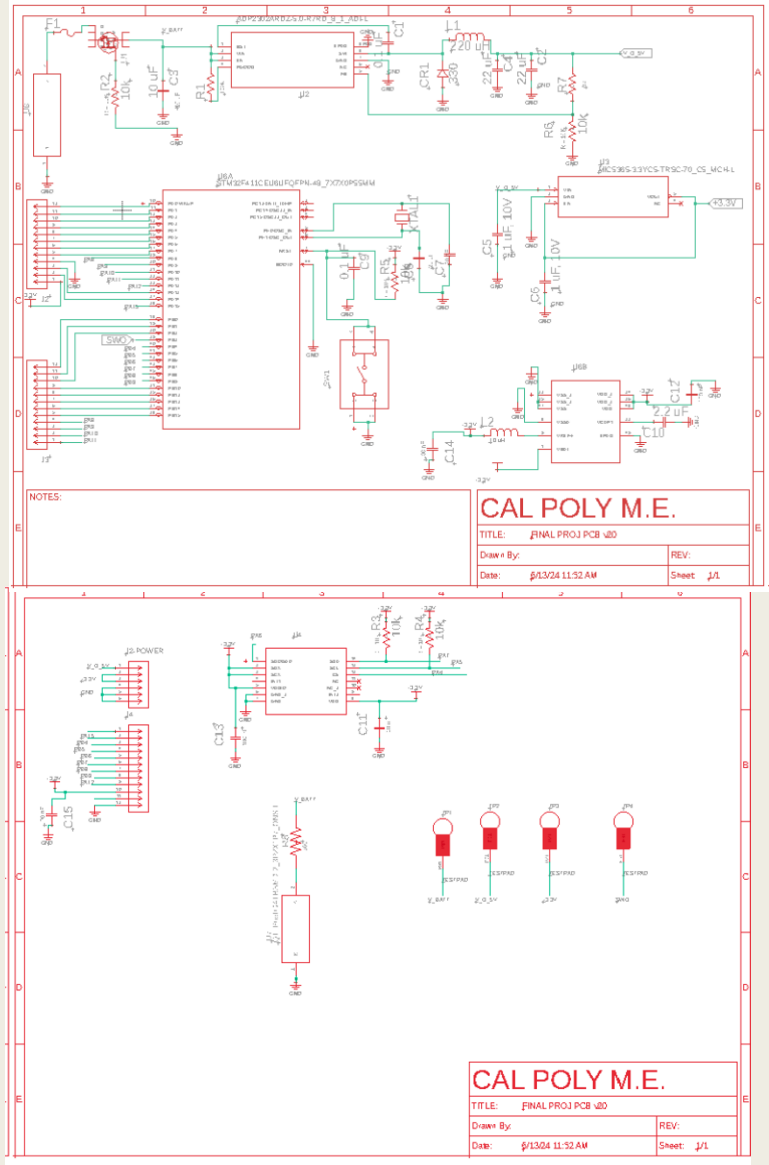

PCB schematics designed for board procurement

Self Balancing Motorcycle

Mechanical Design:

- Designed for additive manufacturing to enable quick iteration
- Reaction wheel for correcting tilt
- Continuous servo connected to rear wheel through gears to maintain even weight distribution

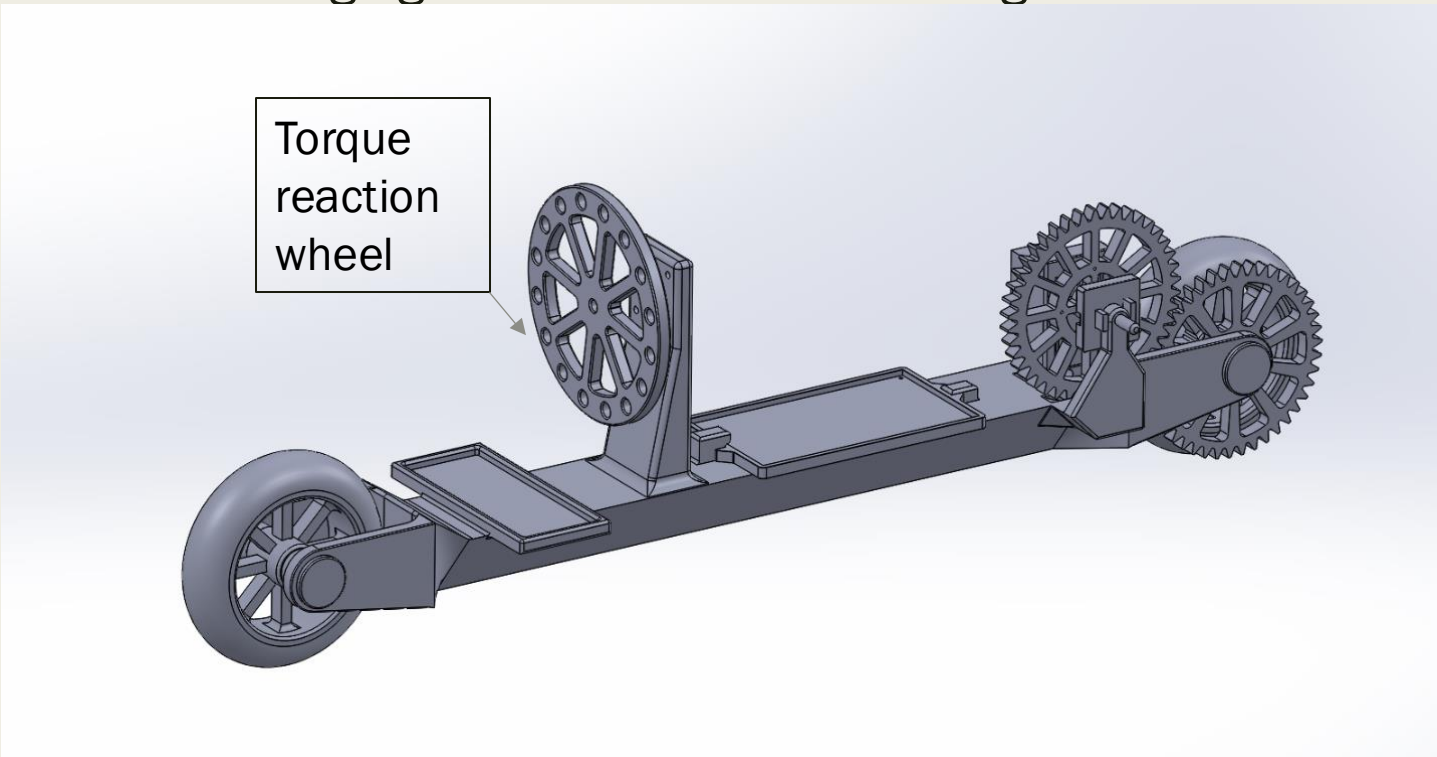

Self Balancing Motorcycle

Balance Controls:

- Bicycle modeled as an inverted pendulum
- Deviation from upright detected by inertial measurement unit
- Corrective torque applied through speed ramping of DC motor
- Actuation signal run through PID controller for response tuning

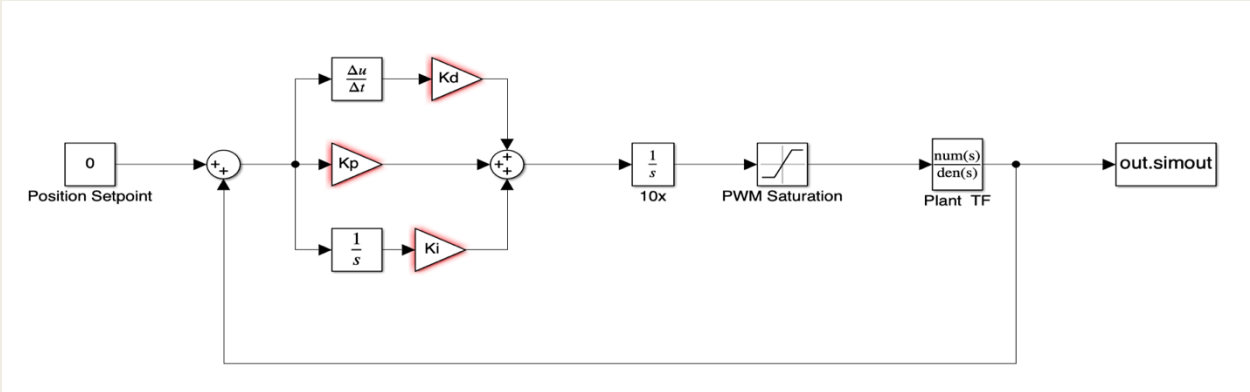

Control system model

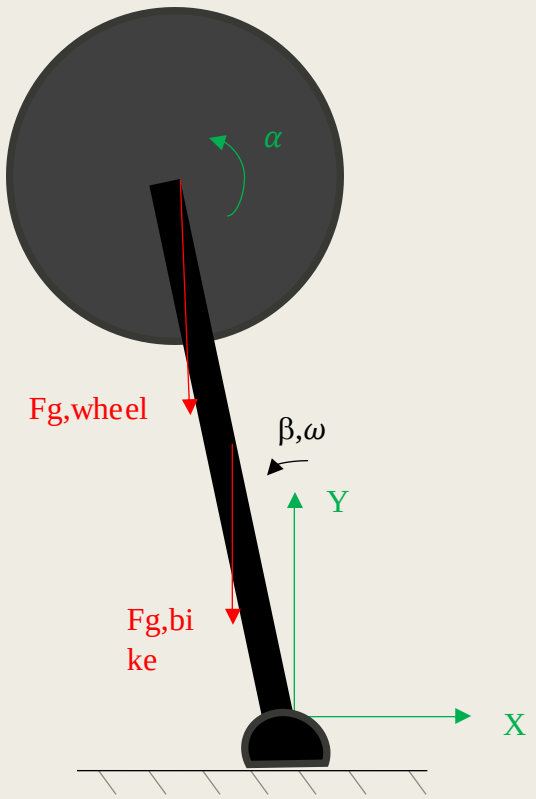

Inverted Pendulum Model

Self Balancing Motorcycle

Challenge	Response
PCB short circuit discovered during testing.	Conducted meticulous probing and component isolation to identify problem area. Implemented bodge wire and additional voltage source to bypass effected components.
Reaction wheel did not exert necessary corrective torque when changing actuation direction.	Created torque with speed ramping up and down from a steady state velocity rather than forward and reverse direction changes.
Bicycle not perfectly balanced.	Integral control was necessary to correct for this, but it reduced maximum balance time to due to motor speed saturation.

Learning Outcomes: Dynamic modeling, actuator selection, sensor selection, electronics design, PCB design, control system design

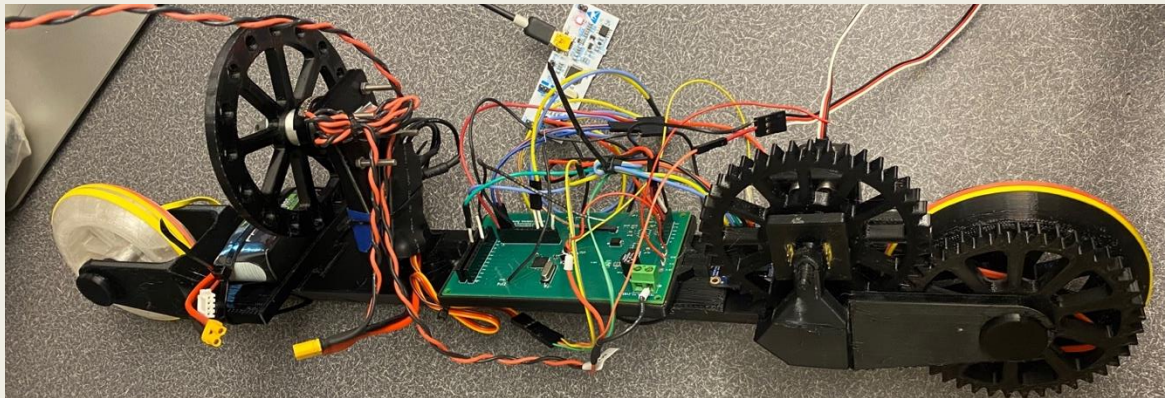

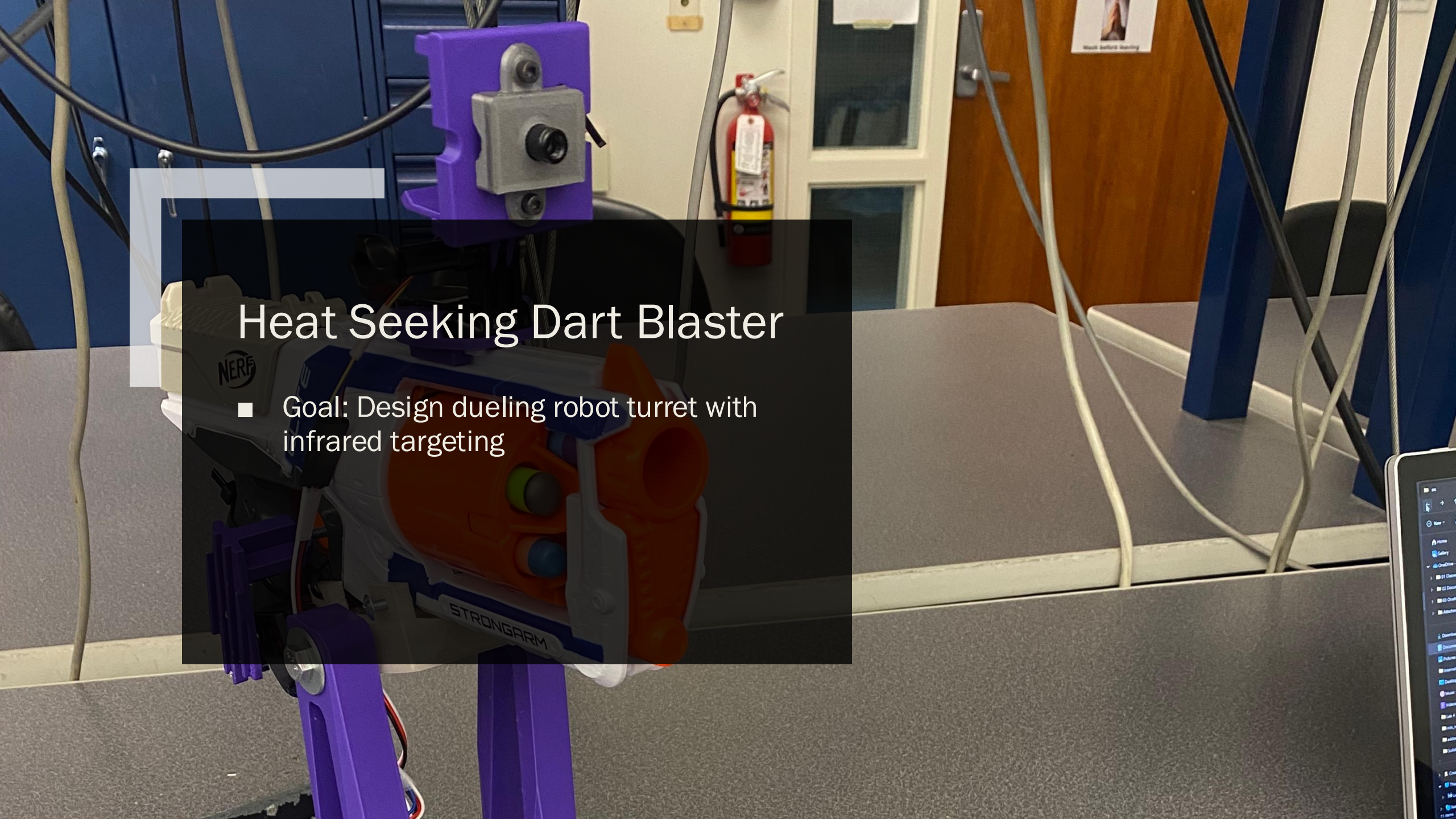

Heat Seeking Dart Blaster

- Goal: Design dueling robot turret with infrared targeting

Heat Seeking Dart Blaster

- Designed mechanical system to integrate with dart blaster and actuators
  - Pivot actuation with DC motor
  - Trigger actuation with servo
- Programmed signal processing and control in Python on STM32 microcontroller
- PID positional control

Learning Outcomes:
Python, control system design, I2C, microcontroller programming

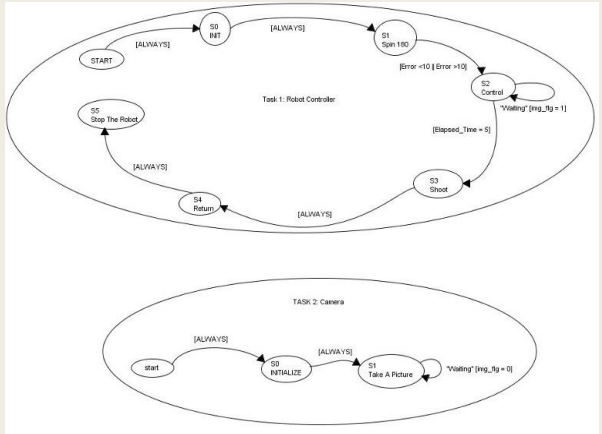
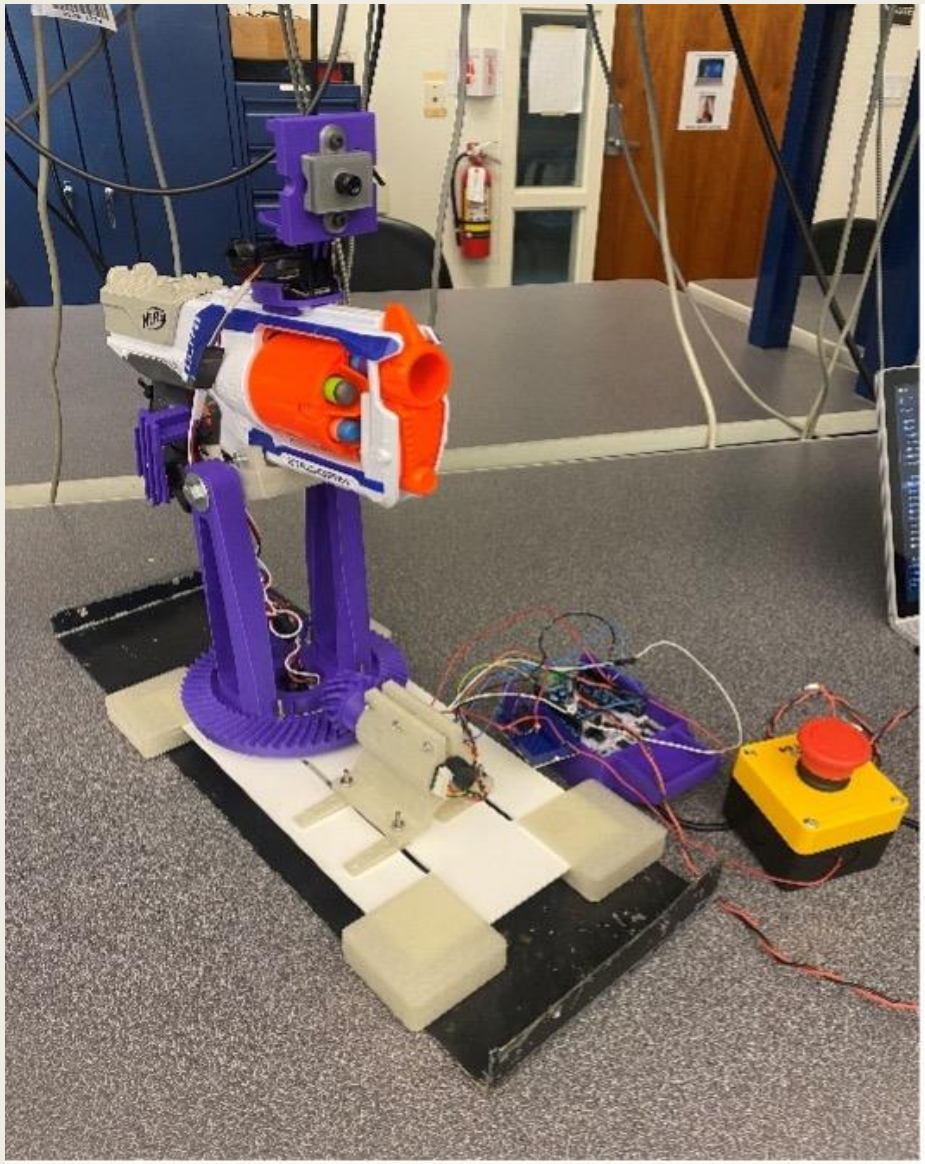
Finite state machine