R2, R4, R6, R8 are optional pull-down resistors
if FET driver ICs are omitted.

R1, R3, R5, R7 are to be placed
if LTC1981 are omitted.

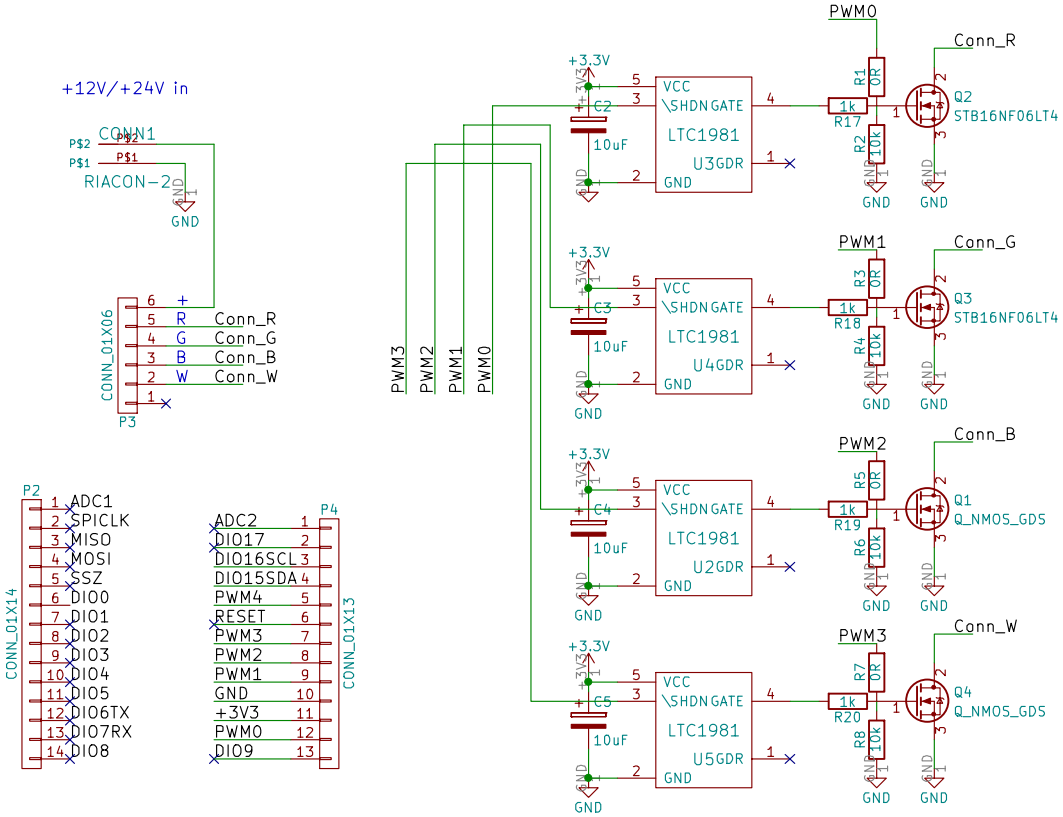

Sheet: /
File: jn5168_treiberboard_nur_treiber.sch

Title:

Size: A4	Date:	Rev:
KiCad E.D.A. kicad 4.0.5		Id: 1/1