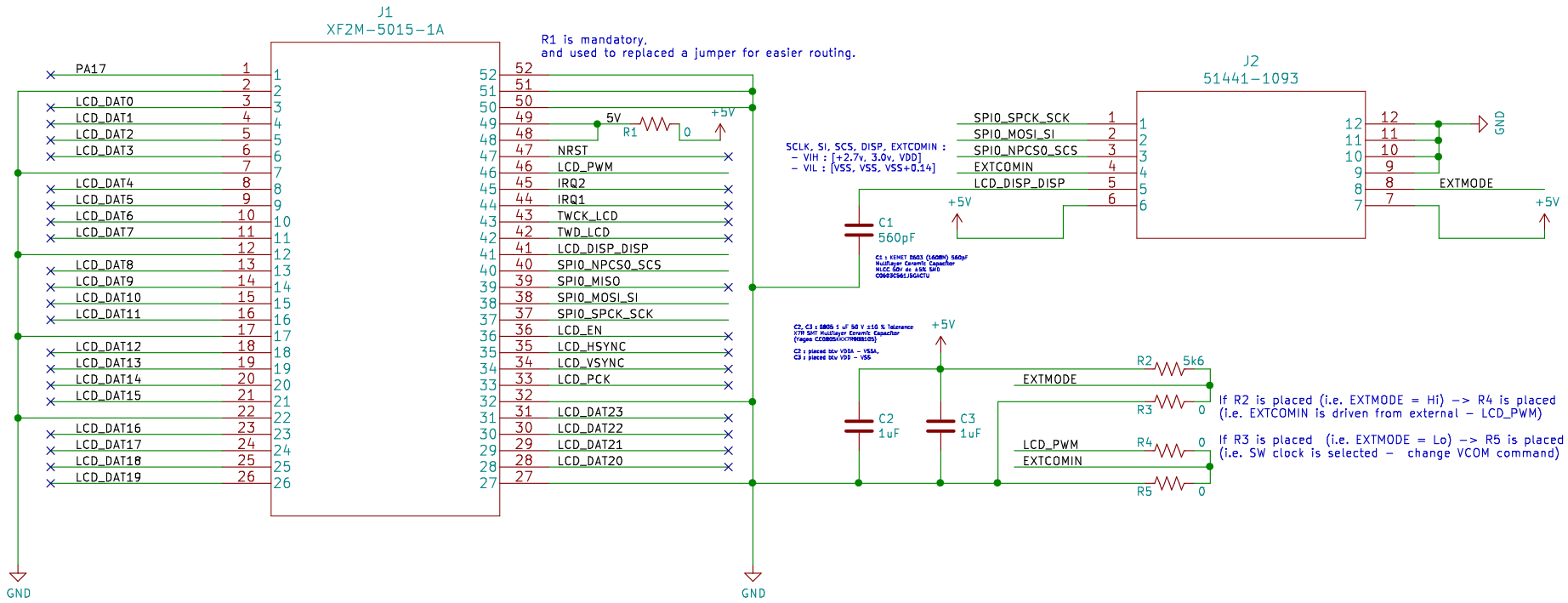

TKVision

Sheet: /

File: sama5d27_som1_ek-sharp_ls0xx_lcd-adapter.sch

Title: Sharp LS0xx Adapter for SAMA5D27 SOM1 EK

Size: A4	Date: 2020-11-06	**Rev: A0**
KiCad E.D.A. kicad 5.1.7-a382d34a8B7ubuntu16.04.1		Id: 1/1