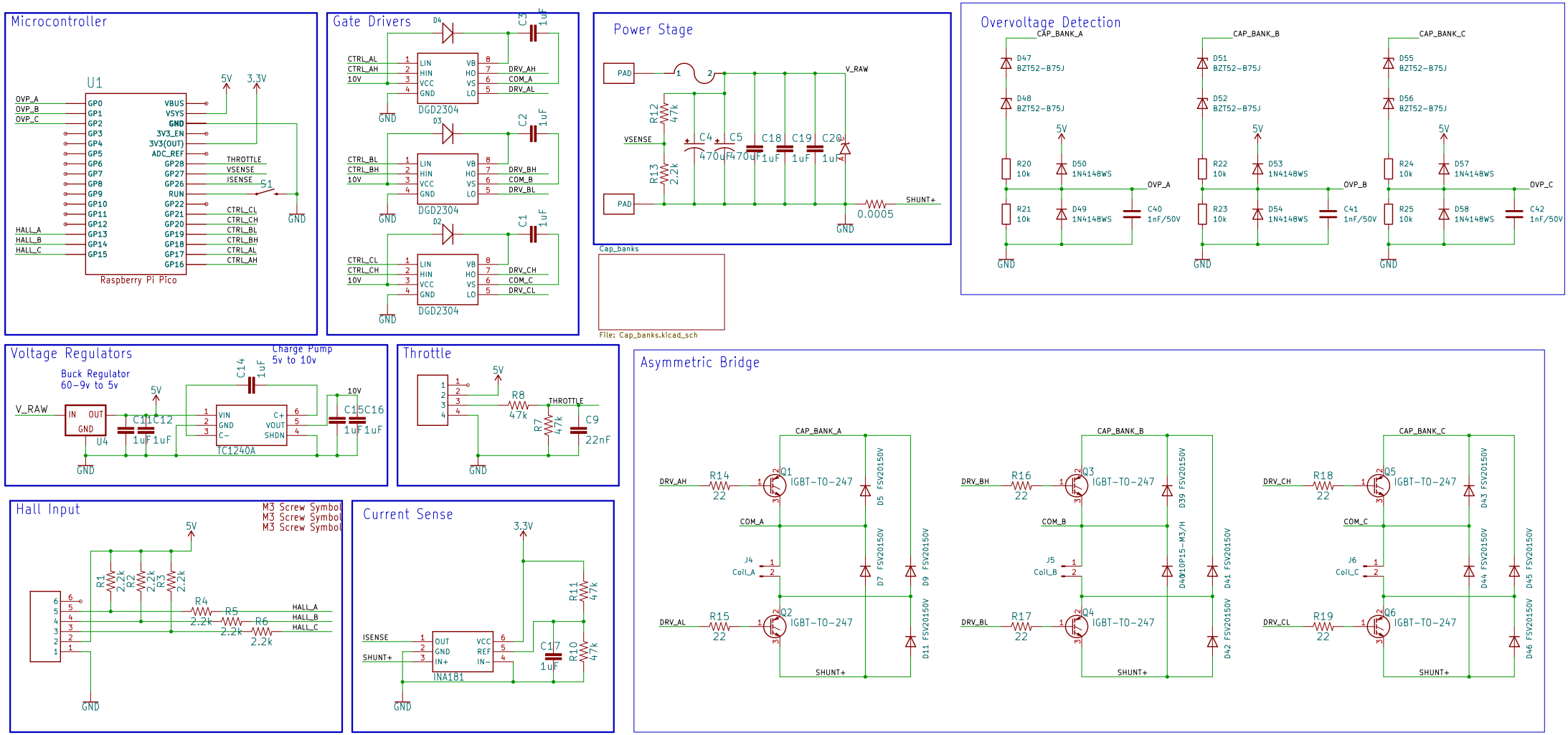
Microcontroller
U1
Raspberry Pi Pico
OVP_A
OVP_B
OVP_C
HALL_A
HALL_B
HALL_C
THROTTLE
VSENSE
ISENSE
S1
5V
3.3V
GND
Gate Drivers
DGD2304
CTRL_AL
CTRL_AH
CTRL_BL
CTRL_BH
CTRL_CL
CTRL_CH
DRV_AH
DRV_AL
DRV_BH
DRV_BL
DRV_CH
DRV_CL
COM_A
COM_B
COM_C
Power Stage
PAD
V_RAW
VSENSE
SHUNT+
0.0005
Cap_banks
File: Cap_banks.kicad_sch
Overvoltage Detection
CAP_BANK_A
CAP_BANK_B
CAP_BANK_C
OVP_A
OVP_B
OVP_C
Voltage Regulators
Buck Regulator
60-9v to 5v
Charge Pump
5v to 10v
TC1240A
10V
Throttle
THROTTLE
Asymmetric Bridge
IGBT-TO-247
Coil_A
Coil_B
Coil_C
SHUNT+
Hall Input
M3 Screw Symbol
HALL_A
HALL_B
HALL_C
Current Sense
INA181
ISENSE
SHUNT+

Cap Banks

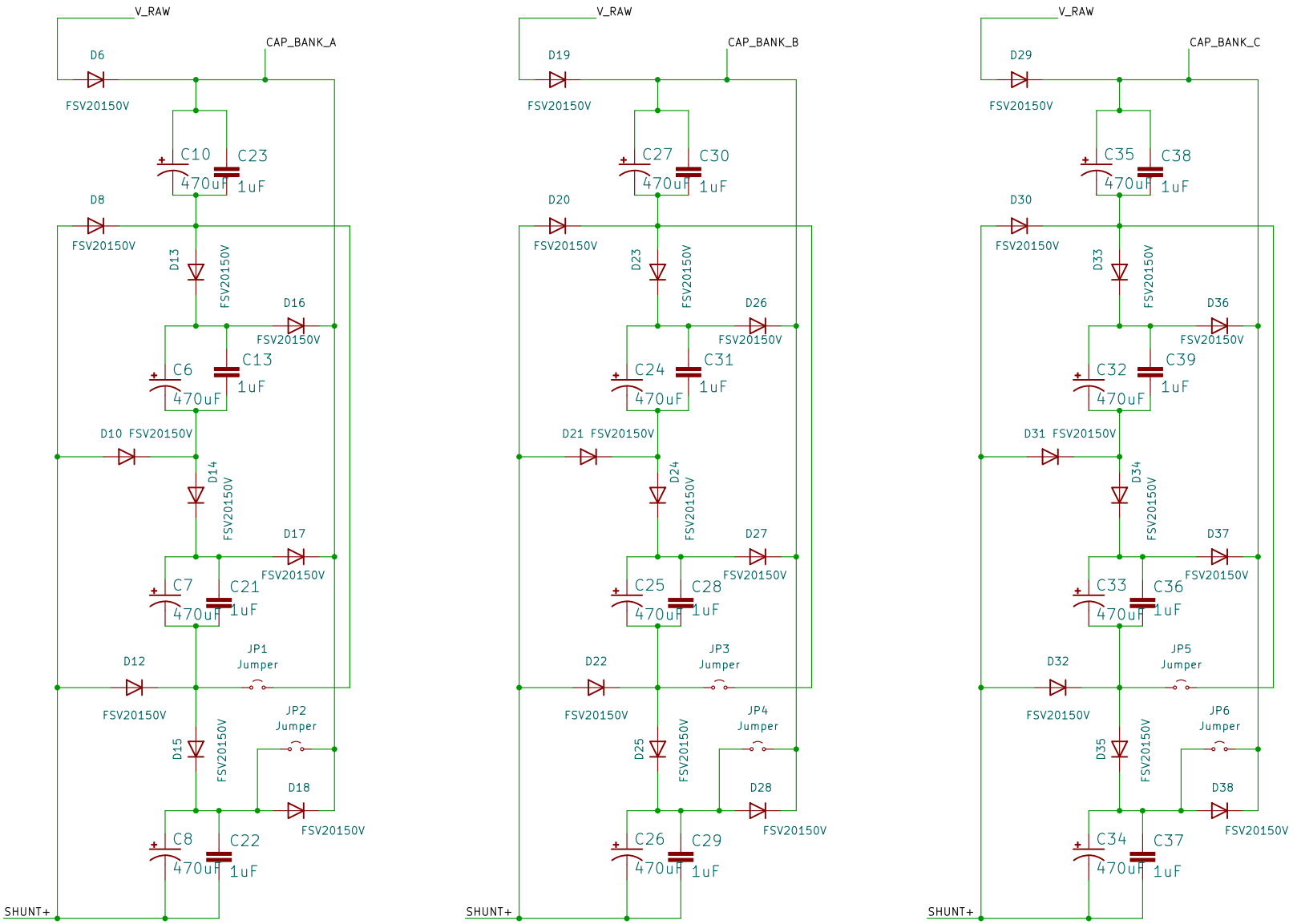
V_RAW
CAP_BANK_A
D6
FSV20150V
C10
470uF
C23
1uF
D8
FSV20150V
D13
FSV20150V
D16
FSV20150V
C6
470uF
C13
1uF
D10 FSV20150V
D14
FSV20150V
D17
FSV20150V
C7
470uF
C21
1uF
D12
FSV20150V
JP1
Jumper
JP2
Jumper
D15
FSV20150V
D18
FSV20150V
C8
470uF
C22
1uF
SHUNT+
V_RAW
CAP_BANK_B
D19
FSV20150V
C27
470uF
C30
1uF
D20
FSV20150V
D23
FSV20150V
D26
FSV20150V
C24
470uF
C31
1uF
D21 FSV20150V
D24
FSV20150V
D27
FSV20150V
C25
470uF
C28
1uF
D22
FSV20150V
JP3
Jumper
JP4
Jumper
D25
FSV20150V
D28
FSV20150V
C26
470uF
C29
1uF
SHUNT+
V_RAW
CAP_BANK_C
D29
FSV20150V
C35
470uF
C38
1uF
D30
FSV20150V
D33
FSV20150V
D36
FSV20150V
C32
470uF
C39
1uF
D31 FSV20150V
D34
FSV20150V
D37
FSV20150V
C33
470uF
C36
1uF
D32
FSV20150V
JP5
Jumper
JP6
Jumper
D35
FSV20150V
D38
FSV20150V
C34
470uF
C37
1uF
SHUNT+