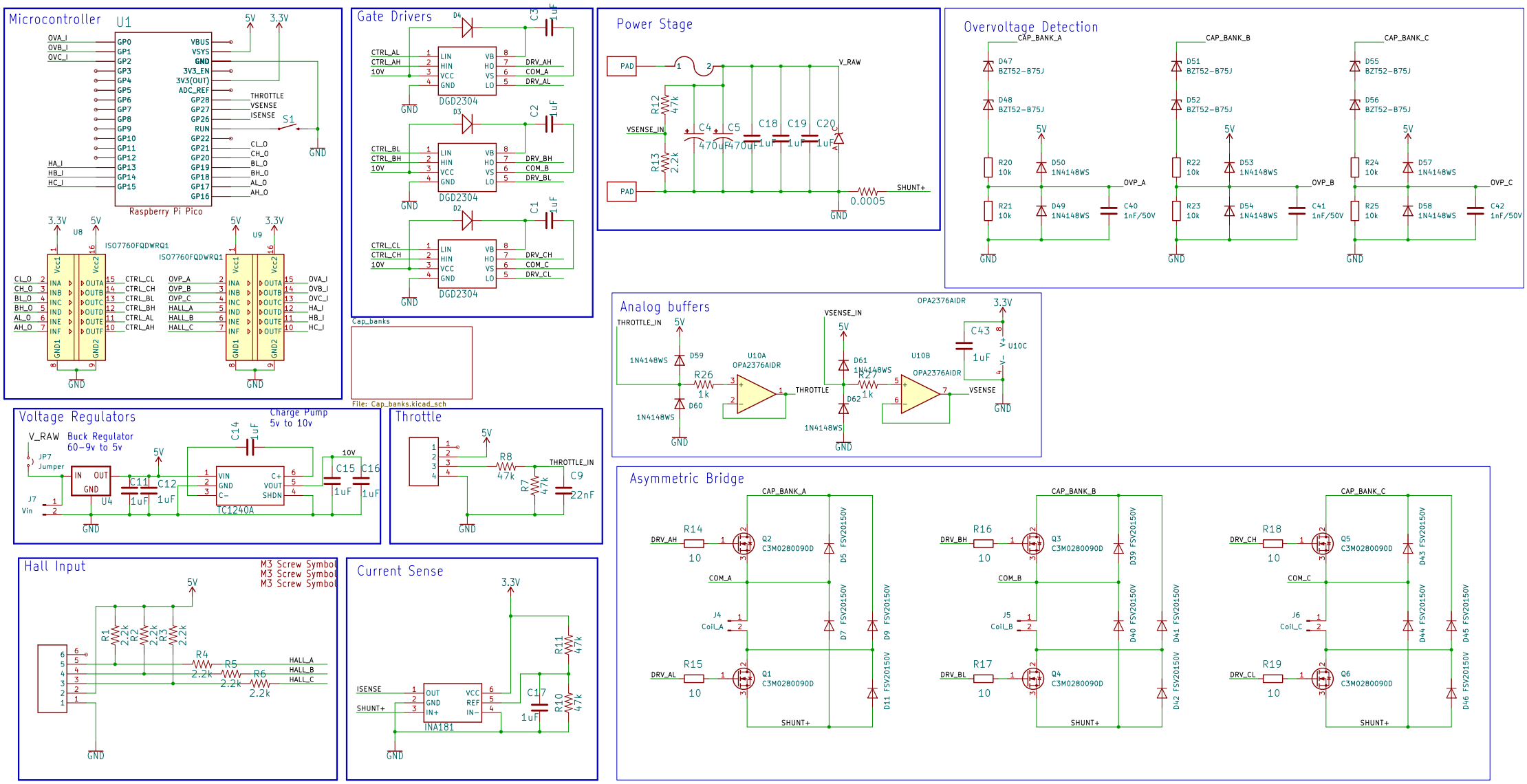
Microcontroller
U1
Raspberry Pi Pico
GP0 GP1 GP2 GP3 GP4 GP5 GP6 GP7 GP8 GP9 GP10 GP11 GP12 GP13 GP14 GP15
VBUS VSYS GND 3V3_EN 3V3(OUT) ADC_REF GP28 GP27 GP26 RUN GP22 GP21 GP20 GP19 GP18 GP17 GP16
OVA_I OVB_I OVC_I HA_I HB_I HC_I
THROTTLE VSENSE ISENSE S1
CL_O CH_O BL_O BH_O AL_O AH_O
5V 3.3V GND
U8 U9
ISO7760FQDWRQ1
Vcc1 Vcc2 INA INB INC IND INE INF OUTA OUTB OUTC OUTD OUTE OUTF GND1 GND2
CTRL_CL CTRL_CH CTRL_BL CTRL_BH CTRL_AL CTRL_AH
OVP_A OVP_B OVP_C HALL_A HALL_B HALL_C
OVA_I OVB_I OVC_I HA_I HB_I HC_I
Gate Drivers
D4 D3 D2
C3 C2 C1 1uF
CTRL_AL CTRL_AH 10V
CTRL_BL CTRL_BH 10V
CTRL_CL CTRL_CH 10V
LIN HIN VCC GND VB HO VS LO
DGD2304
DRV_AH COM_A DRV_AL
DRV_BH COM_B DRV_BL
DRV_CH COM_C DRV_CL
Cap_banks
File: Cap_banks.kicad_sch
Power Stage
PAD V_RAW
R12 47k
R13 2.2k
VSENSE_IN
C4 470uF C5 470uF C18 1uF C19 1uF C20 1uF
0.0005
SHUNT+
Overvoltage Detection
CAP_BANK_A CAP_BANK_B CAP_BANK_C
D47 D48 D51 D52 D55 D56 BZT52-B75J
R20 R21 R22 R23 R24 R25 10k
D50 D49 D53 D54 D57 D58 1N4148WS
OVP_A OVP_B OVP_C
C40 C41 C42 1nF/50V
Analog buffers
THROTTLE_IN
D59 D60 1N4148WS
R26 1k
U10A OPA2376AIDR
THROTTLE
VSENSE_IN
D61 D62
R27 1k
U10B
C43 1uF
U10C
VSENSE
Voltage Regulators
V_RAW
Buck Regulator 60-9v to 5v
JP7 Jumper
J7 Vin
IN OUT GND
U4
C11 1uF C12 1uF
Charge Pump 5v to 10v
C14 1uF
VIN GND C- C+ VOUT SHDN
TC1240A
C15 1uF C16 1uF
10V
Throttle
R8 47k
R7 47k
C9 22nF
Hall Input
M3 Screw Symbol
R1 R2 R3 2.2k
R4 R5 R6 2.2k
HALL_A HALL_B HALL_C
Current Sense
3.3V
ISENSE SHUNT+
OUT GND IN+ VCC REF IN-
INA181
R11 47k R10 47k
C17 1uF
Asymmetric Bridge
CAP_BANK_A CAP_BANK_B CAP_BANK_C
DRV_AH DRV_AL DRV_BH DRV_BL DRV_CH DRV_CL
R14 R15 R16 R17 R18 R19 10
Q1 Q2 Q3 Q4 Q5 Q6 C3M0280090D
COM_A COM_B COM_C
J4 Coil_A J5 Coil_B J6 Coil_C
D5 D7 D9 D11 D39 D40 D41 D42 D43 D44 D45 D46 FSV20150V
SHUNT+

# Cap Banks

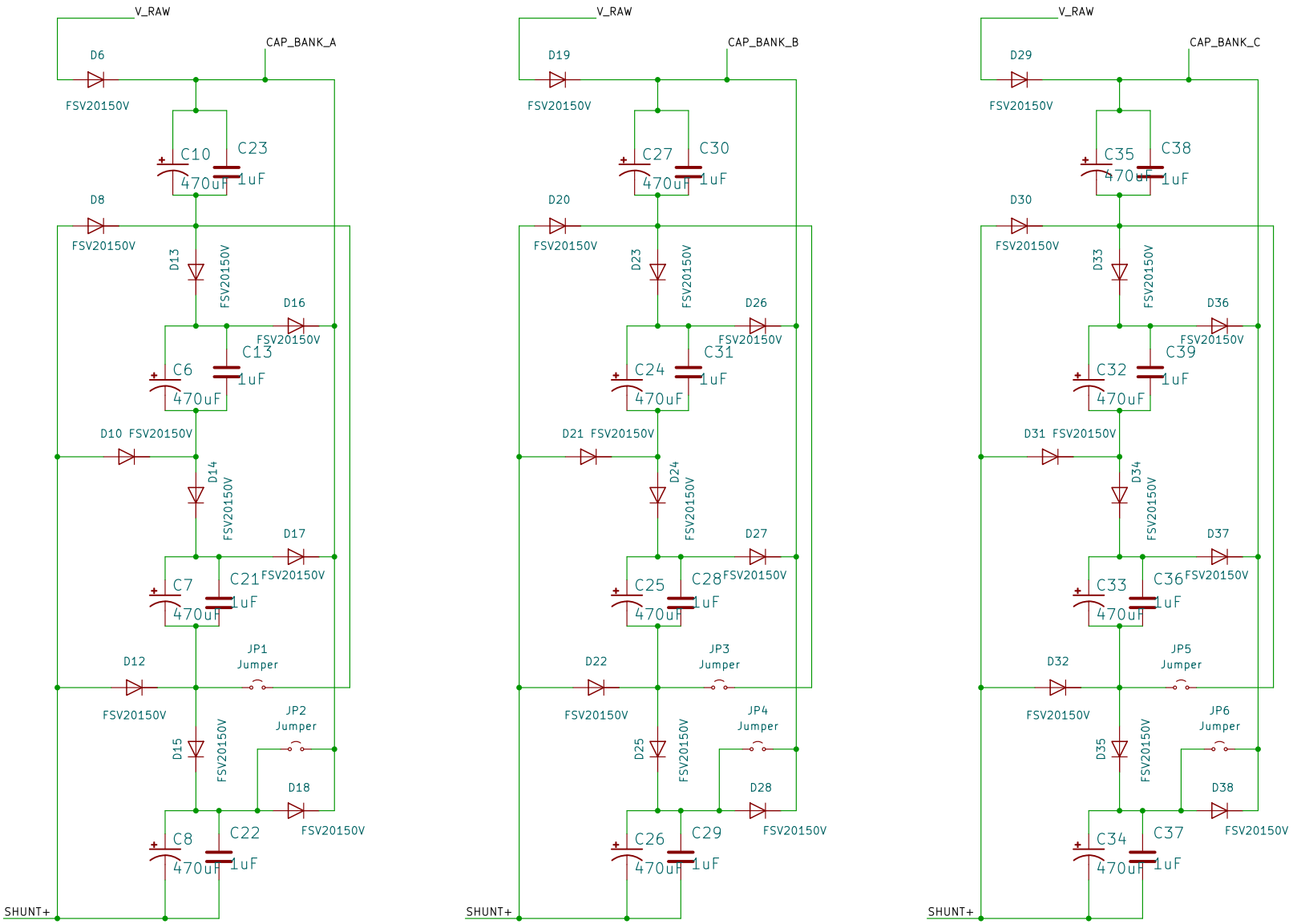
V_RAW
CAP_BANK_A
D6
FSV20150V
C10
470uF
C23
1uF
D8
FSV20150V
D13
FSV20150V
D16
FSV20150V
C6
470uF
C13
1uF
D10 FSV20150V
D14
FSV20150V
D17
FSV20150V
C7
470uF
C21
1uF
D12
FSV20150V
JP1
Jumper
JP2
Jumper
D15
FSV20150V
D18
FSV20150V
C8
470uF
C22
1uF
SHUNT+
V_RAW
CAP_BANK_B
D19
FSV20150V
C27
470uF
C30
1uF
D20
FSV20150V
D23
FSV20150V
D26
FSV20150V
C24
470uF
C31
1uF
D21 FSV20150V
D24
FSV20150V
D27
FSV20150V
C25
470uF
C28
1uF
D22
FSV20150V
JP3
Jumper
JP4
Jumper
D25
FSV20150V
D28
FSV20150V
C26
470uF
C29
1uF
SHUNT+
V_RAW
CAP_BANK_C
D29
FSV20150V
C35
470uF
C38
1uF
D30
FSV20150V
D33
FSV20150V
D36
FSV20150V
C32
470uF
C39
1uF
D31 FSV20150V
D34
FSV20150V
D37
FSV20150V
C33
470uF
C36
1uF
D32
FSV20150V
JP5
Jumper
JP6
Jumper
D35
FSV20150V
D38
FSV20150V
C34
470uF
C37
1uF
SHUNT+