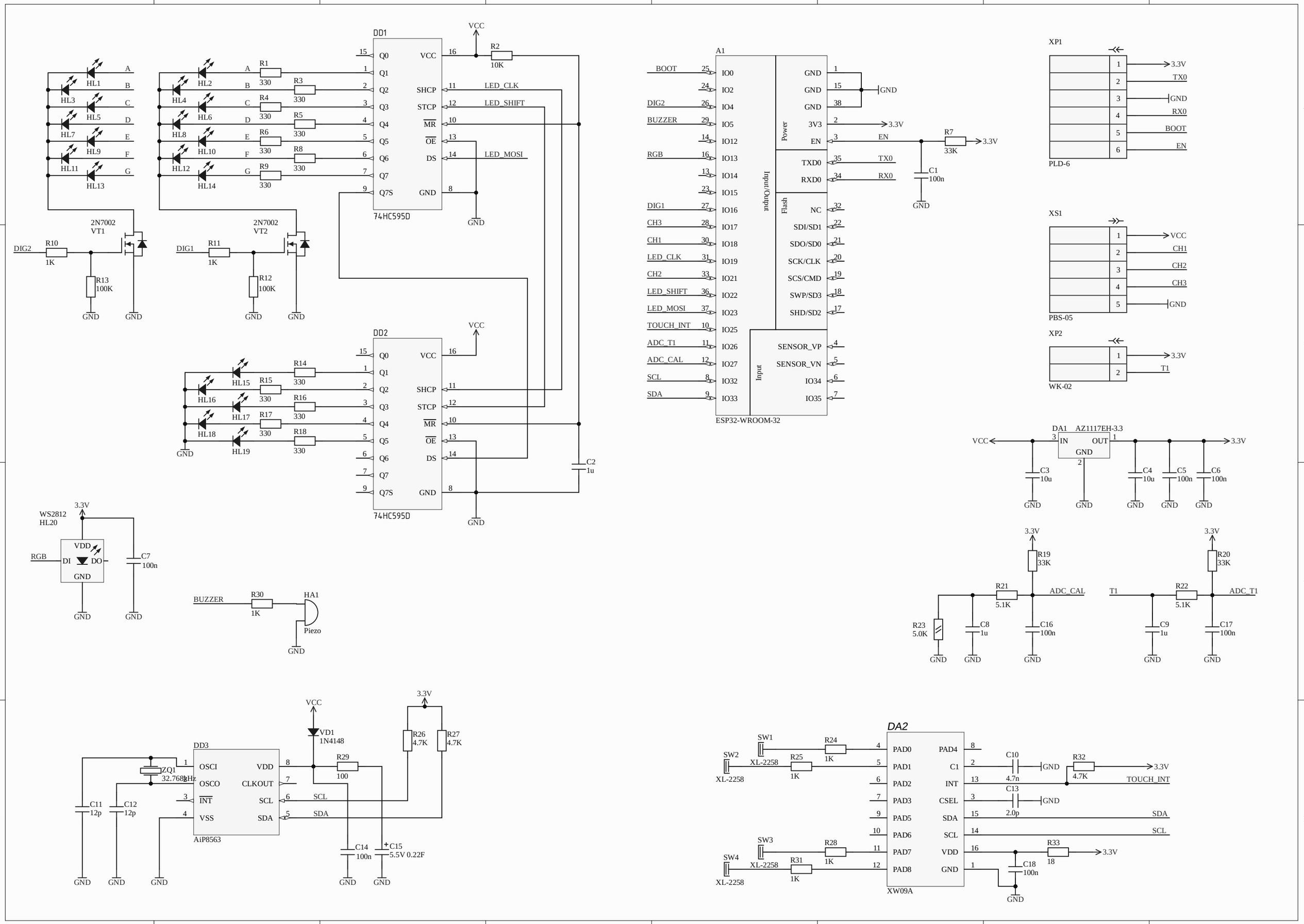
DD1
74HC595D
DD2
74HC595D
VCC
R2
10K
LED_CLK
LED_SHIFT
LED_MOSI
R1 330
R2 330
R3 330
R4 330
R5 330
R6 330
R7 330
R8 330
R9 330
R14 330
R15 330
R16 330
R17 330
R18 330
HL1
HL2
HL3
HL4
HL5
HL6
HL7
HL8
HL9
HL10
HL11
HL12
HL13
HL14
HL15
HL16
HL17
HL18
HL19
2N7002
VT1
2N7002
VT2
DIG2
R10
1K
R13
100K
DIG1
R11
1K
R12
100K
GND
C2
1u
WS2812
HL20
3.3V
VDD
DI
DO
RGB
C7
100n
BUZZER
R30
1K
HA1
Piezo
A1
ESP32-WROOM-32
Power
Input/Output
Flash
Input
BOOT
DIG2
BUZZER
RGB
DIG1
CH3
CH1
LED_CLK
CH2
LED_SHIFT
LED_MOSI
TOUCH_INT
ADC_T1
ADC_CAL
SCL
SDA
IO0
IO2
IO4
IO5
IO12
IO13
IO14
IO15
IO16
IO17
IO18
IO19
IO21
IO22
IO23
IO25
IO26
IO27
IO32
IO33
GND
3V3
EN
TXD0
RXD0
NC
SDI/SD1
SDO/SD0
SCK/CLK
SCS/CMD
SWP/SD3
SHD/SD2
SENSOR_VP
SENSOR_VN
IO34
IO35
TX0
RX0
R7
33K
C1
100n
XP1
PLD-6
3.3V
TX0
GND
RX0
BOOT
EN
XS1
PBS-05
VCC
CH1
CH2
CH3
GND
XP2
WK-02
3.3V
T1
DA1 AZ1117EH-3.3
IN
OUT
GND
C3
10u
C4
10u
C5
100n
C6
100n
R19
33K
R20
33K
R21
5.1K
R22
5.1K
ADC_CAL
ADC_T1
T1
R23
5.0K
C8
1u
C16
100n
C9
1u
C17
100n
DD3
AiP8563
OSCI
OSCO
INT
VSS
VDD
CLKOUT
SCL
SDA
ZQ1
32.768kHz
C11
12p
C12
12p
VD1
1N4148
R29
100
R26
4.7K
R27
4.7K
C14
100n
C15
5.5V 0.22F
DA2
XW09A
SW1
SW2
SW3
SW4
XL-2258
R24
1K
R25
1K
R28
1K
R31
1K
PAD0
PAD1
PAD2
PAD3
PAD5
PAD6
PAD7
PAD8
PAD4
C1
INT
CSEL
SDA
SCL
VDD
GND
C10
4.7n
C13
2.0p
R32
4.7K
R33
18
C18
100n
TOUCH_INT

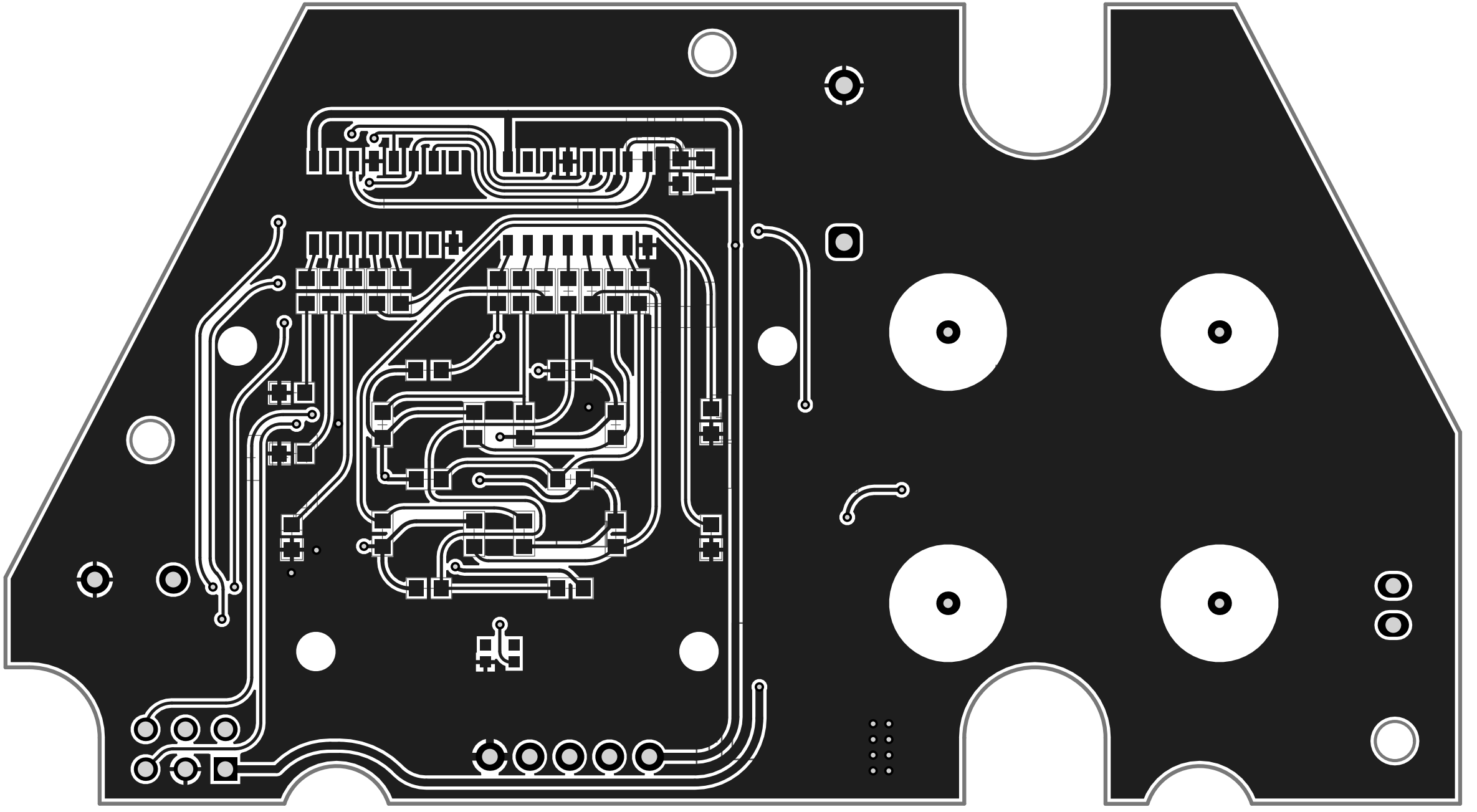

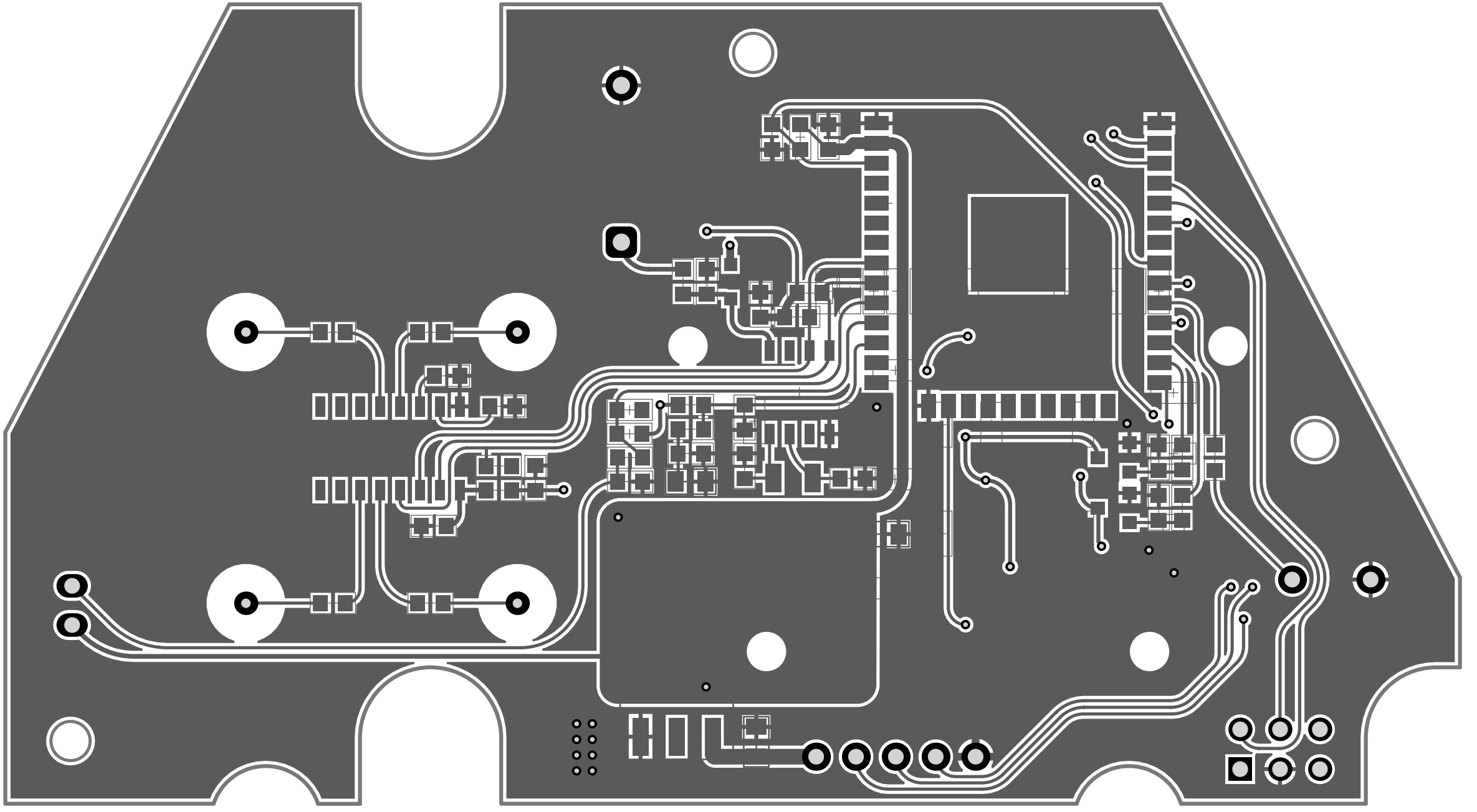

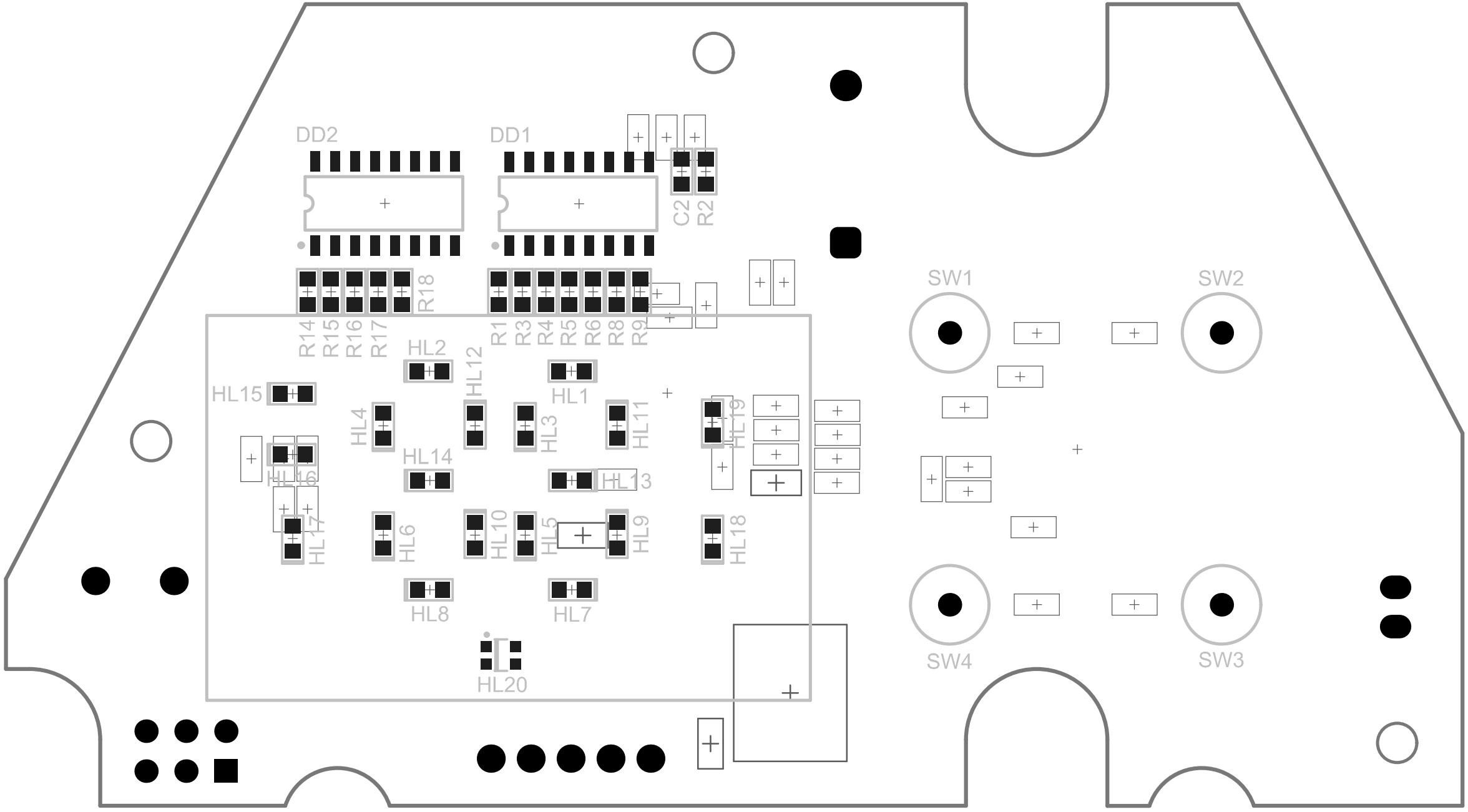
DD2
DD1
C2
R2
R18
R14
R15
R16
R17
R1
R3
R4
R5
R6
R8
R9
SW1
SW2
SW4
SW3
HL2
HL12
HL1
HL15
HL4
HL3
HL11
HL19
HL14
HL16
HL13
HL17
HL6
HL10
HL5
HL9
HL18
HL8
HL7
HL20

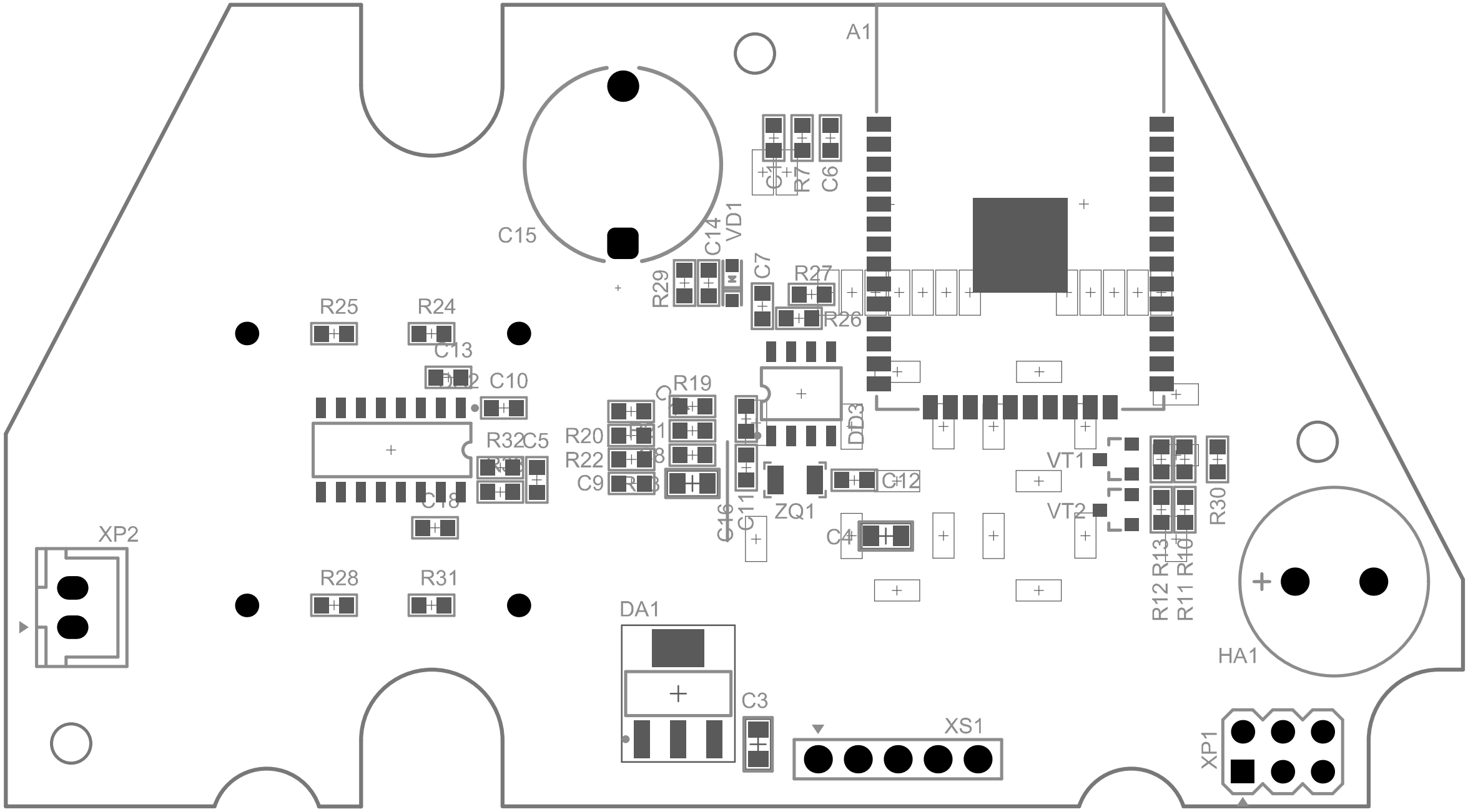
A1
C1
R7
C6
C15
C14
VD1
R29
C7
R27
R26
R25
R24
C13
C10
R19
DD3
R20
R32
C5
R22
C9
C18
C11
C16
ZQ1
C12
C4
VT1
VT2
R30
R12
R13
R11
R10
XP2
R28
R31
DA1
C3
XS1
HA1
XP1