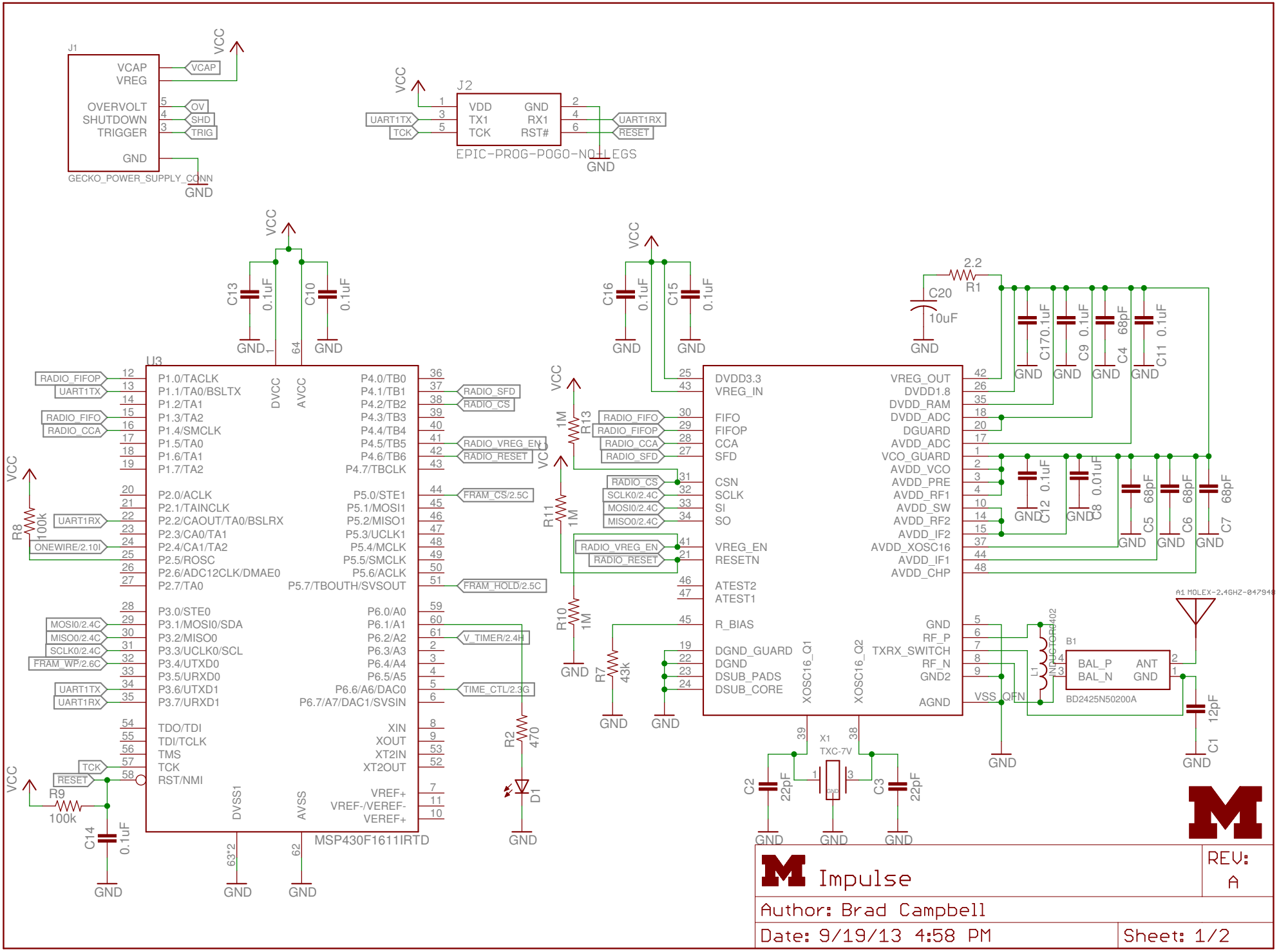
J1
VCAP
VREG
OVERVOLT
SHUTDOWN
TRIGGER
GND
VCAP
OV
SHD
TRIG
GECKO_POWER_SUPPLY_CONN
VCC
GND
J2
VDD
TX1
TCK
GND
RX1
RST#
UART1TX
TCK
UART1RX
RESET
EPIC-PROG-POGO-NO-LEGS
U3
MSP430F1611IRTD
P1.0/TACLK
P1.1/TA0/BSLTX
P1.2/TA1
P1.3/TA2
P1.4/SMCLK
P1.5/TA0
P1.6/TA1
P1.7/TA2
P2.0/ACLK
P2.1/TAINCLK
P2.2/CAOUT/TA0/BSLRX
P2.3/CA0/TA1
P2.4/CA1/TA2
P2.5/ROSC
P2.6/ADC12CLK/DMAE0
P2.7/TA0
P3.0/STE0
P3.1/MOSI0/SDA
P3.2/MISO0
P3.3/UCLK0/SCL
P3.4/UTXD0
P3.5/URXD0
P3.6/UTXD1
P3.7/URXD1
TDO/TDI
TDI/TCLK
TMS
TCK
RST/NMI
P4.0/TB0
P4.1/TB1
P4.2/TB2
P4.3/TB3
P4.4/TB4
P4.5/TB5
P4.6/TB6
P4.7/TBCLK
P5.0/STE1
P5.1/MOSI1
P5.2/MISO1
P5.3/UCLK1
P5.4/MCLK
P5.5/SMCLK
P5.6/ACLK
P5.7/TBOUTH/SVSOUT
P6.0/A0
P6.1/A1
P6.2/A2
P6.3/A3
P6.4/A4
P6.5/A5
P6.6/A6/DAC0
P6.7/A7/DAC1/SVSIN
XIN
XOUT
XT2IN
XT2OUT
VREF+
VREF-/VEREF-
VEREF+
DVCC
AVCC
DVSS1
AVSS
RADIO_FIFOP
UART1TX
RADIO_FIFO
RADIO_CCA
RADIO_SFD
RADIO_CS
RADIO_VREG_EN
RADIO_RESET
FRAM_CS/2.5C
FRAM_HOLD/2.5C
V_TIMER/2.4H
TIME_CTL/2.3G
MOSI0/2.4C
MISO0/2.4C
SCLK0/2.4C
FRAM_WP/2.6C
ONEWIRE/2.10I
TCK
RESET
C13 0.1uF
C10 0.1uF
C16 0.1uF
C15 0.1uF
C20 10uF
R1 2.2
C17 0.1uF
C9 0.1uF
C4 68pF
C11 0.1uF
C12 0.1uF
C8 0.01uF
C5 68pF
C6 68pF
C7 68pF
R13 1M
R11 1M
R10 1M
R7 43k
R8 100k
R9 100k
R2 470
D1
C14 0.1uF
C2 22pF
C3 22pF
X1
TXC-7V
C1 12pF
B1
BD2425N50200A
A1 MOLEX-2.4GHZ-047948
L1
INDUCTOR0402
DVDD3.3
VREG_IN
FIFO
FIFOP
CCA
SFD
CSN
SCLK
SI
SO
VREG_EN
RESETN
ATEST2
ATEST1
R_BIAS
DGND_GUARD
DGND
DSUB_PADS
DSUB_CORE
XOSC16_Q1
XOSC16_Q2
VREG_OUT
DVDD1.8
DVDD_RAM
DVDD_ADC
DGUARD
AVDD_ADC
VCO_GUARD
AVDD_VCO
AVDD_PRE
AVDD_RF1
AVDD_SW
AVDD_RF2
AVDD_IF2
AVDD_XOSC16
AVDD_IF1
AVDD_CHP
GND
RF_P
TXRX_SWITCH
RF_N
GND2
AGND
VSS_QFN
BAL_P
BAL_N
ANT
GND
Impulse
REV: A
Author: Brad Campbell
Date: 9/19/13 4:58 PM
Sheet: 1/2

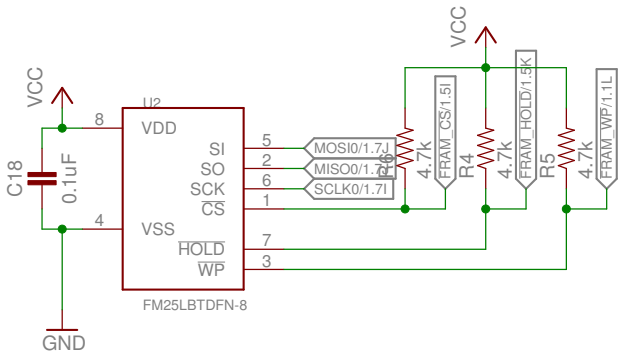

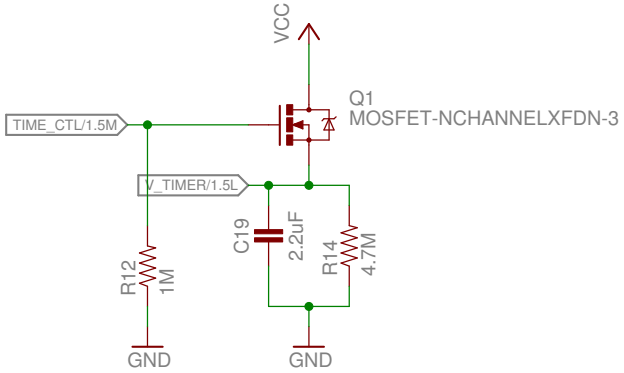

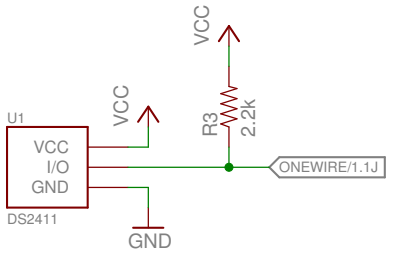

Impulse	REV: A
Author: Brad Campbell	
Date: 9/19/13 4:58 PM	Sheet: 2/2

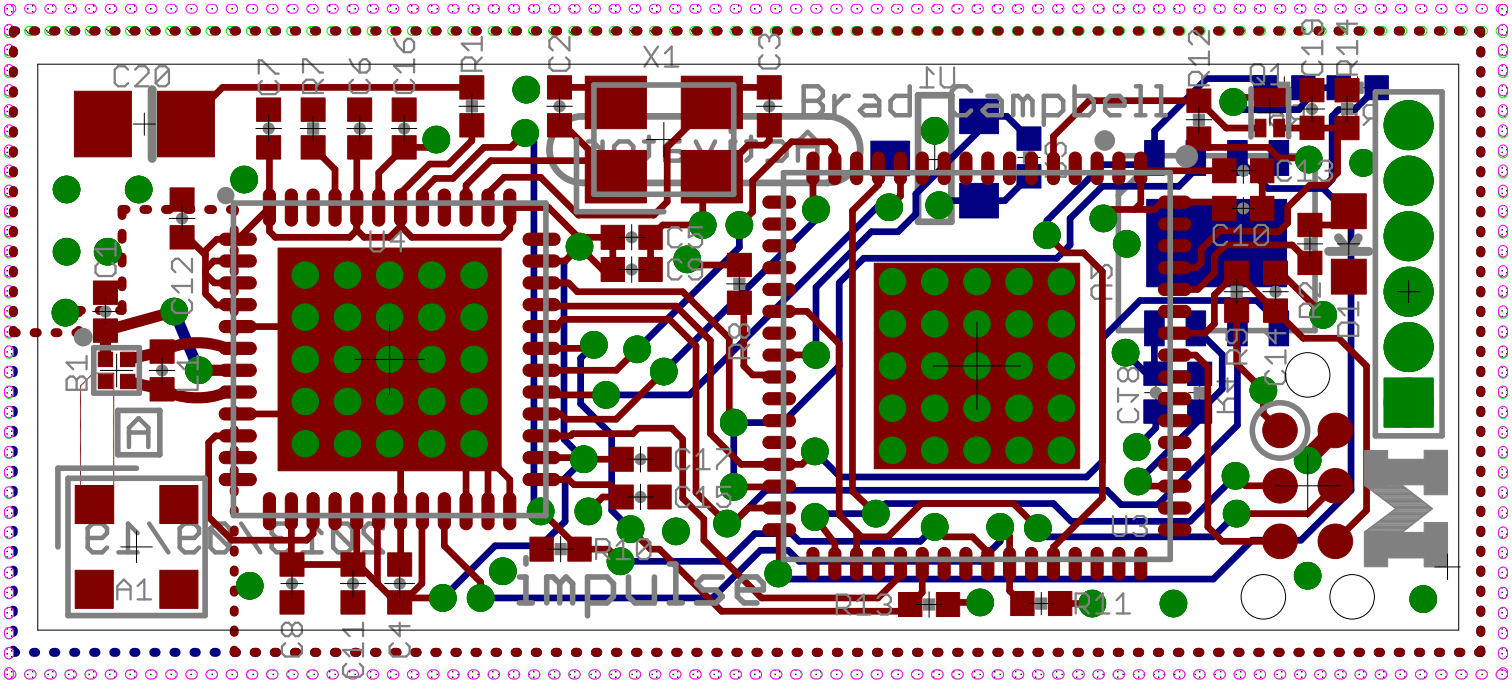

C20
C7
R7
C6
C16
R1
C2
X1
C3
Brad Campbell
C10
C12
B1
A1
C8
C11
C4
C17
C15
R10
R13
R11
U3

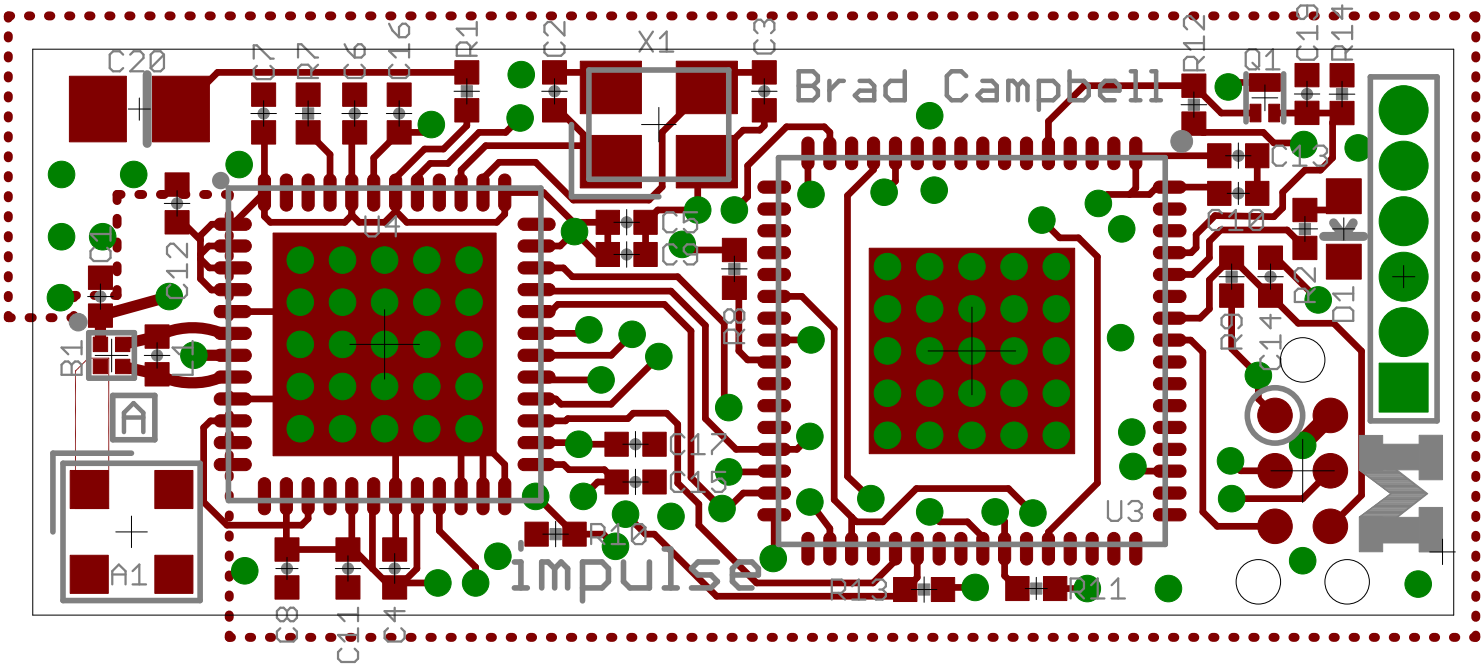

Brad Campbell
impulse
C20
C7
R7
C6
C16
R1
C2
X1
C3
R12
Q1
C19
R14
C13
C10
R2
D1
R9
C14
C5
C9
R8
C17
C15
R10
U4
U3
R13
R11
C12
C1
B1
L1
A1
C8
C11
C4

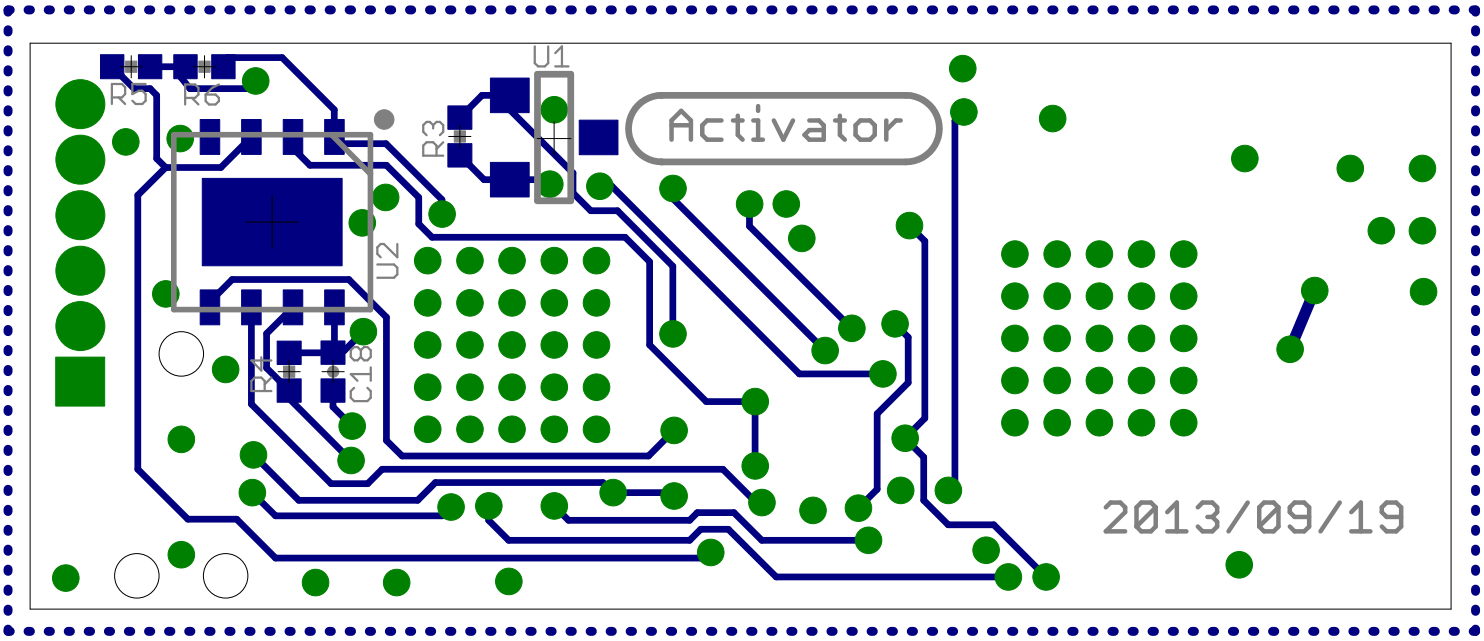
U1
R3
R5
R6
U2
R4
C18
Activator
2013/09/19

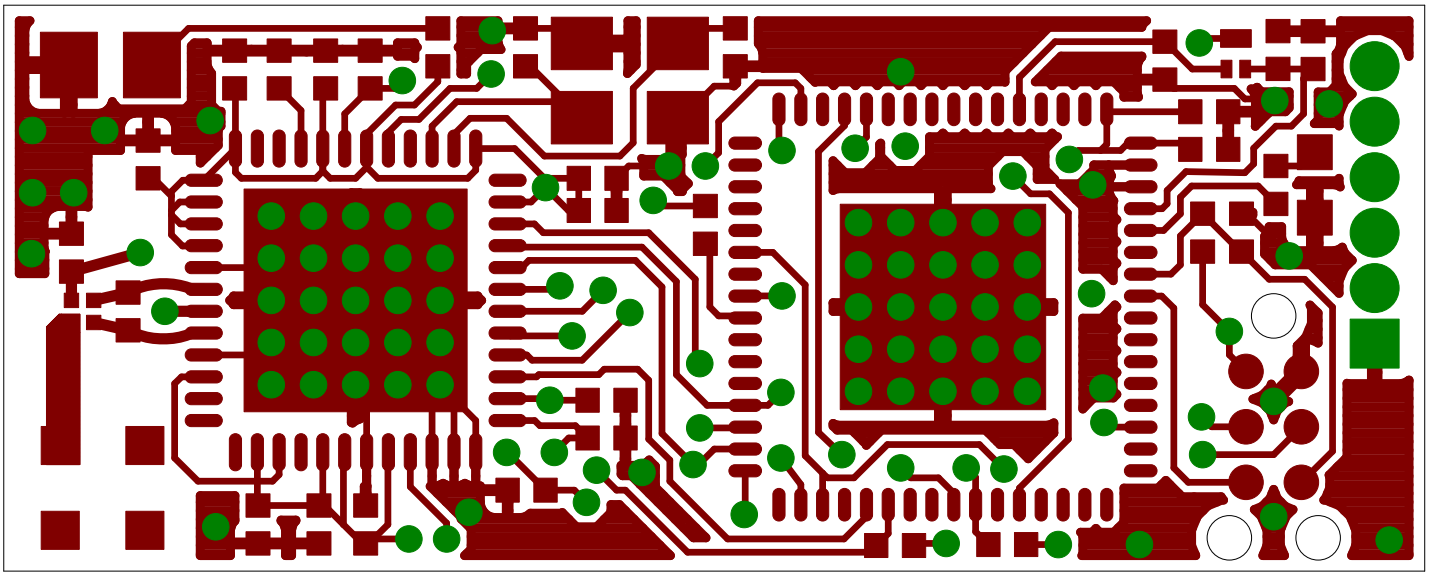

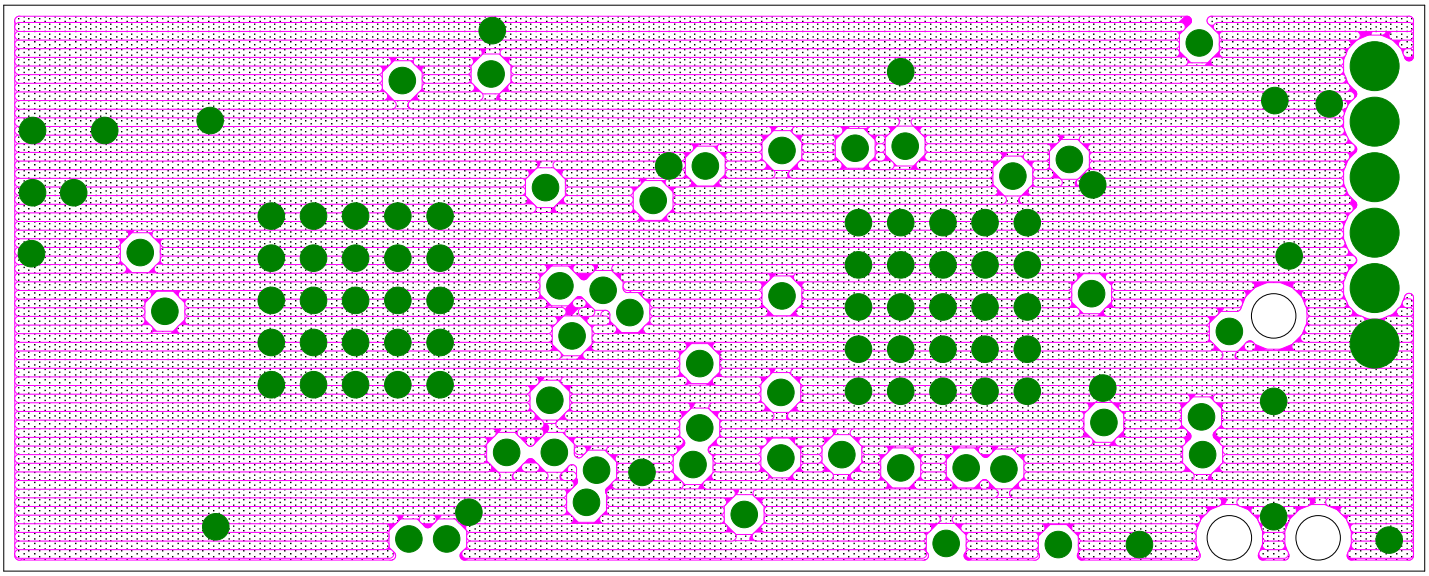

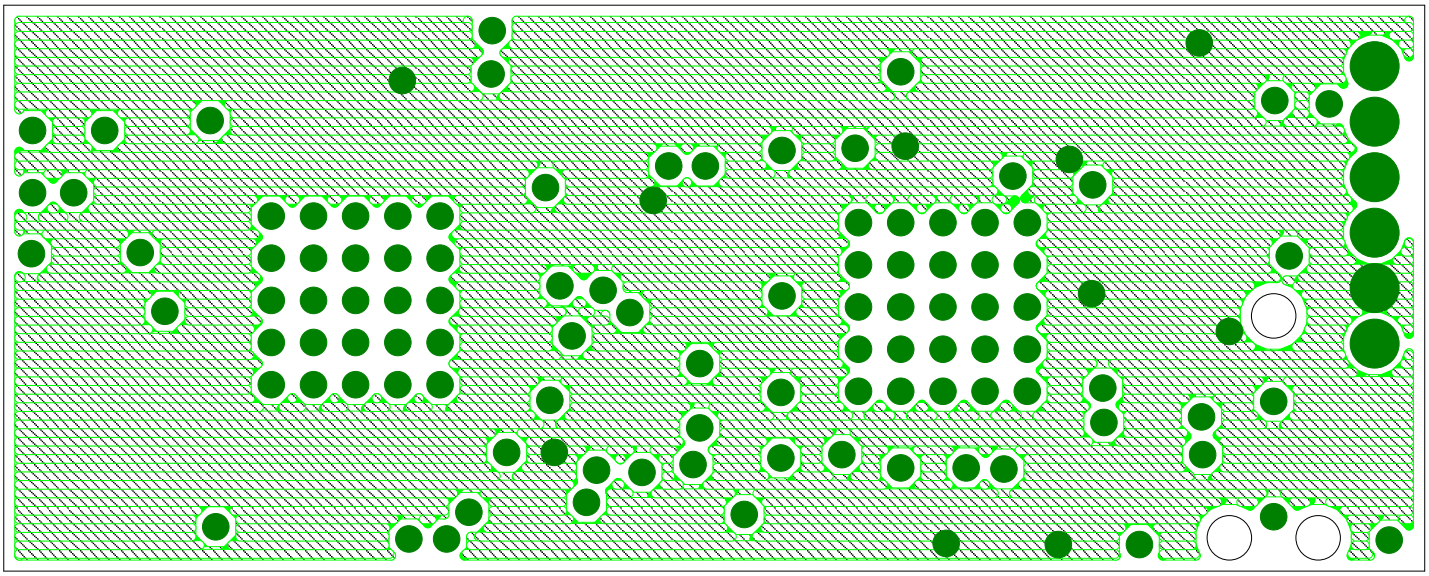

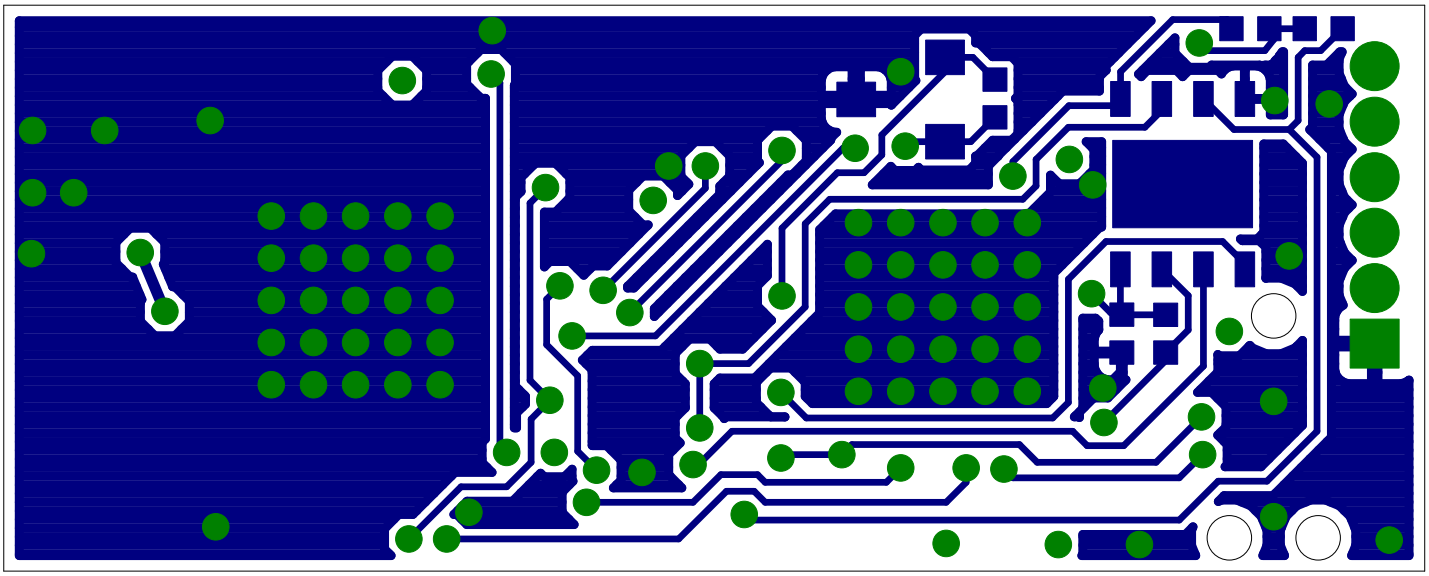

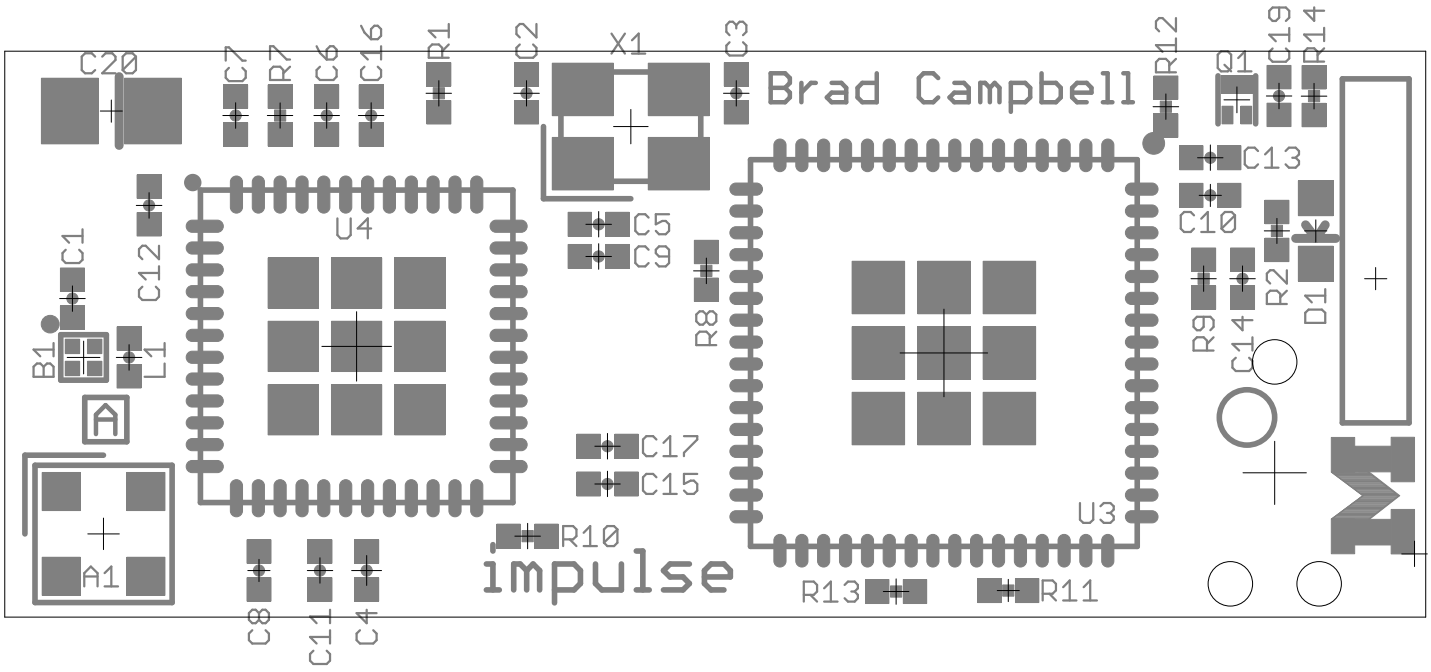
C20
C7
R7
C6
C16
R1
C2
X1
C3
Brad Campbell
R12
Q1
C19
R14
C13
C10
C1
C12
U4
C5
C9
R8
R9
C14
R2
D1
B1
L1
C17
C15
U3
R10
R13
R11
A1
C8
C11
C4
impulse

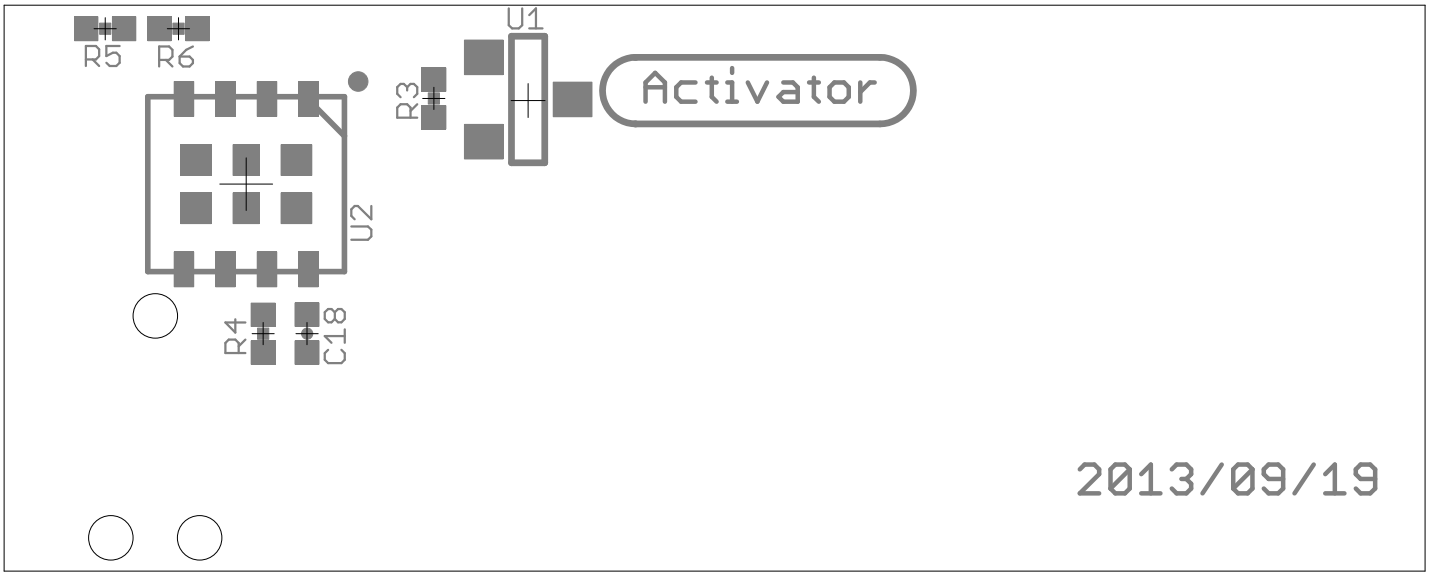
R5
R6
U1
R3
Activator
U2
R4
C18
2013/09/19

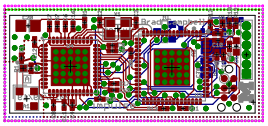

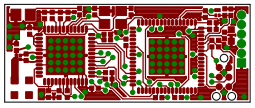

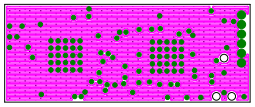

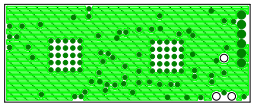

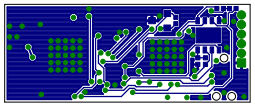

Qty	Value	Device	Package
1	MOLEX-2.4GHZ-047948	MOLEX-2.4GHZ-047948	MOLEX-47948-ANTENNA
1	BD2425N50200A	BD2425N50200A	BD2425N50200A
1	12pF	CAPACITOR	0402_CAP
2	22pF	CAPACITOR	0402_CAP
4	68pF	CAPACITOR	0402_CAP
1	0.01uF	CAPACITOR	0402_CAP
10	0.1uF	CAPACITOR	0402_CAP
1	2.2uF	CAPACITOR	0402_CAP
1	10uF	C-USC0805	C0805
1		LED-0603	LED-0603
1	GECKO_POWER_SUPPLY_CONN	GECKO_POWER_SUPPLY_CONN	HEADER1X6/0.05IN
1	EPIC-PROG-POGO-NO-LEGS	EPIC-PROG-POGO-NO-LEGS	TC2030-IDC-NL
1	INDUCTOR0402	INDUCTOR0402	0402_CAP
1	MOSFET-NCHANNELXFDN-3	MOSFET-NCHANNELXFDN-3	XFDFN-3
1	2.2	RESISTOR	0402_RES
1	470	RESISTOR	0402_RES
1	2.2k	RESISTOR	0402_RES
3	4.7k	RESISTOR	0402_RES
1	43k	RESISTOR	0402_RES
2	100k	RESISTOR	0402_RES
4	1M	RESISTOR	0402_RES
1	4.7M	RESISTOR	0402_RES
1	DS2411	DS2411	SOT-23
1	FM25LBTDFN-8	FM25LBTDFN-8	TDFN-8
1	MSP430F1611IRTD	MSP430F1611IRTD	S-PVQFN-N64
1	CC2420RGZ	CC2420RGZ	S-PVQFN-N48
1	TXC-7V	TXC-7V	TXC-7V

Parts	Description	DIGIKEY
A1		WM4893CT-ND
B1		1173-1063-1-ND
C1	0402 Capacitor	712-1257-1-ND
C2, C3	0402 Capacitor	445-1239-1-ND
C4, C5, C6, C7	0402 Capacitor	445-1245-1-ND
C8	0402 Capacitor	445-1260-1-ND
C9, C10, C11, C12, C13, C14, C15, C16, C17, C18	0402 Capacitor	445-1265-1-ND
C19	0402 Capacitor	445-3882-1-ND
C20	CAPACITOR, American symbol	478-2561-1-ND
D1	LED	
J1	Header on the gecko power supply board.	
J2	Epic programmer based on the Tag Connect pogo pin cable.	
L1		712-1419-1-ND
Q1	Generic NMOS footprint	DMN2400UFB4-7DICT-ND
R1	Resistor	RHM2.2CECT-ND
R2	Resistor	
R3	Resistor	RHM2.2KCECT-ND
R4, R5, R6	Resistor	RHM4.7KCECT-ND
R7	Resistor	RHM43KCECT-ND
R8, R9	Resistor	RHM100KCECT-ND
R10, R11, R12, R13	Resistor	RHM1.0MCECT-ND
R14	Resistor	541-4.7MJCT-ND
U1	Maxim DS2411	DS2411R+CT-ND
U2	IC FRAM 4KBIT 10MHZ 8SOIC	FM25L04B-DGRA-ND
U3		296-18102-1-ND
U4	2.4 GHz IEEE 802.15.4 / ZigBee-ready RF Transceiver	296-19585-1-ND
X1		887-1799-1-ND

MOUSER	TAG-CONNECT
	TC2030-IDC-NL
877-FM25L04B-DG	