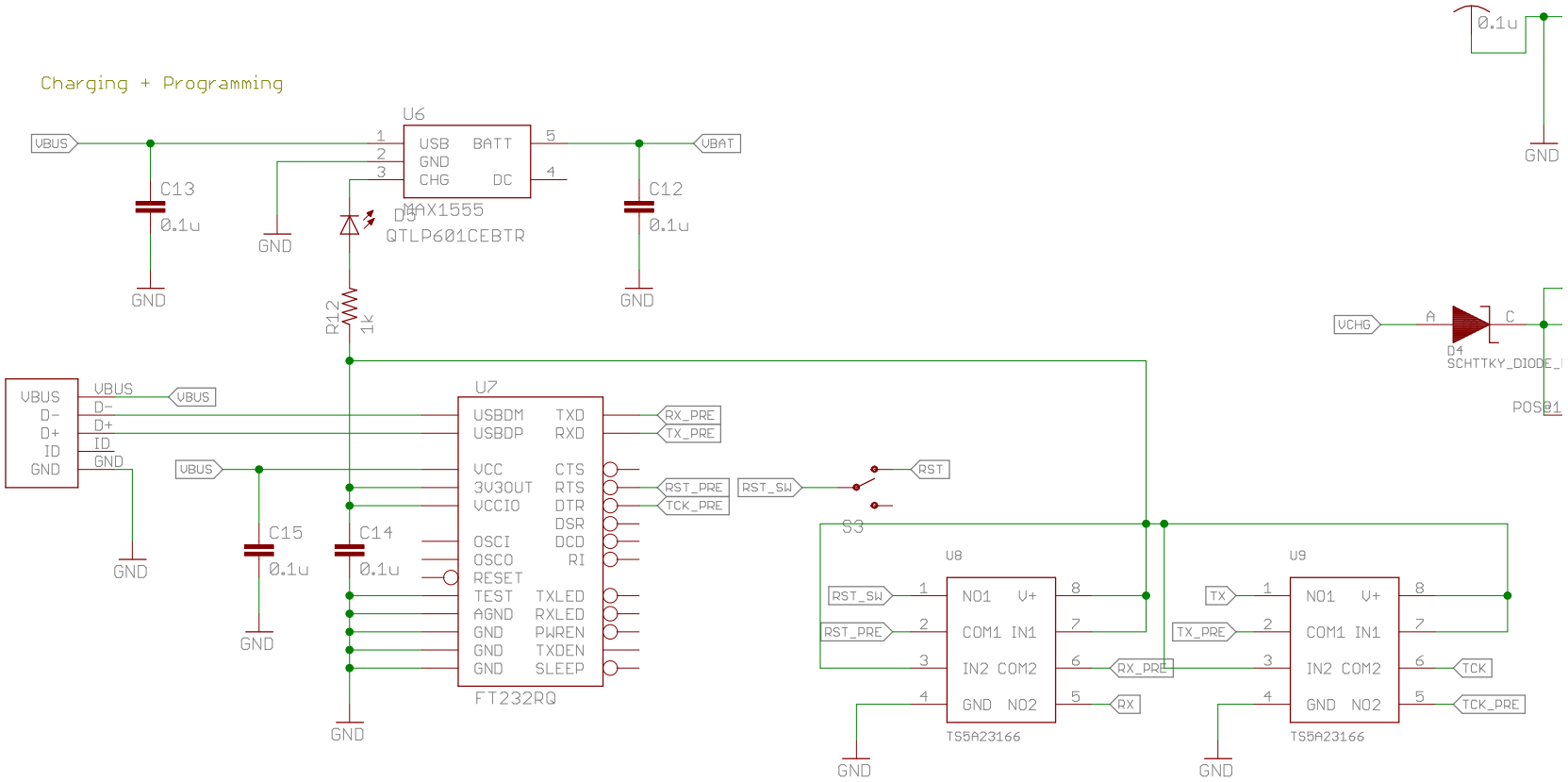
Charging + Programming
U6
VBUS
USB
GND
CHG
BATT
DC
MAX1555
VBAT
C13
0.1u
C12
0.1u
GND
D9
QTLP601CEBTR
R12
1k
U7
VBUS
D-
D+
ID
GND
USBDM
USBDP
VCC
3V3OUT
VCCIO
OSCI
OSCO
RESET
TEST
AGND
TXD
RXD
CTS
RTS
DTR
DSR
DCD
RI
TXLED
RXLED
PWREN
TXDEN
SLEEP
FT232RQ
RX_PRE
TX_PRE
RST_PRE
TCK_PRE
C15
C14
RST_SW
RST
S3
U8
U9
NO1
V+
COM1
IN1
IN2
COM2
NO2
TS5A23166
TX
RX
TCK
TCK_PRE
VCHG
D4
SCHTTKY_DIODE_
POS01

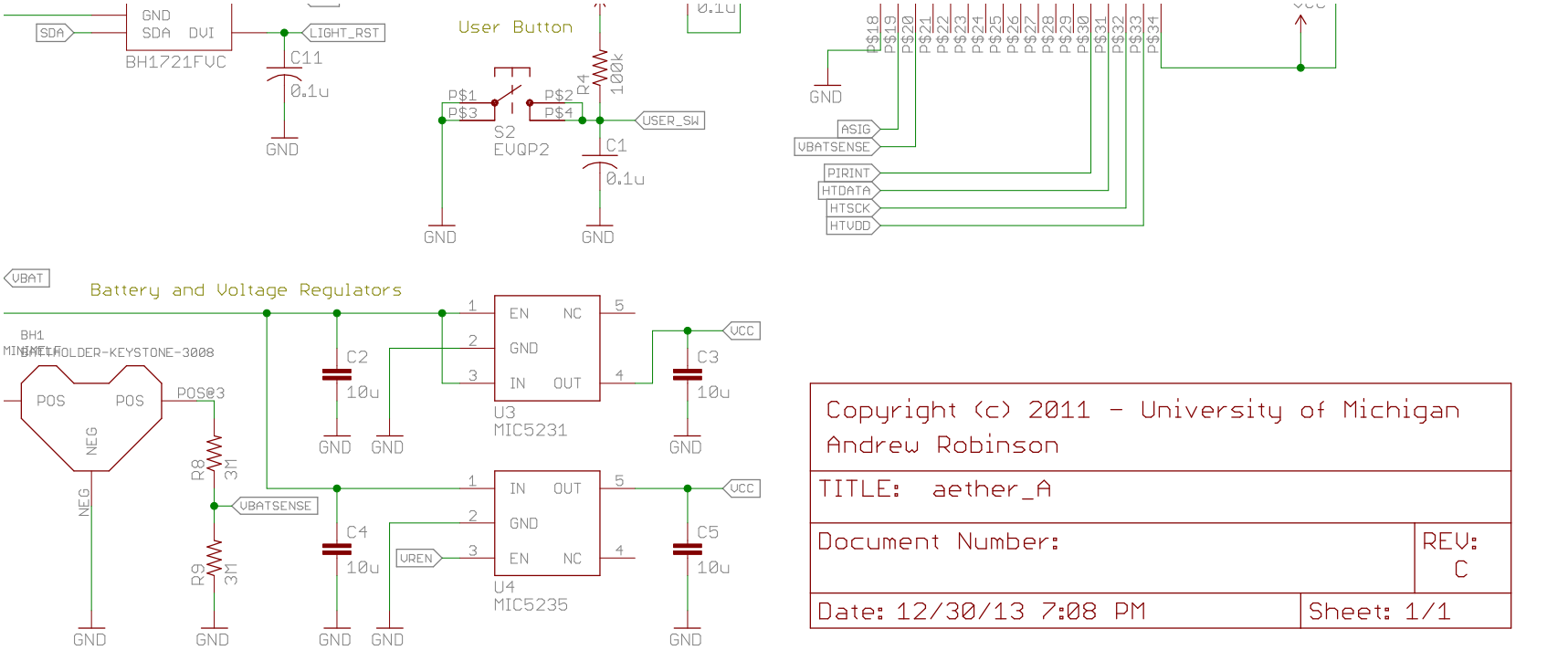

Copyright (c) 2011 - University of Michigan
Andrew Robinson

TITLE: aether_A	
Document Number:	REV: C
Date: 12/30/13 7:08 PM	Sheet: 1/1

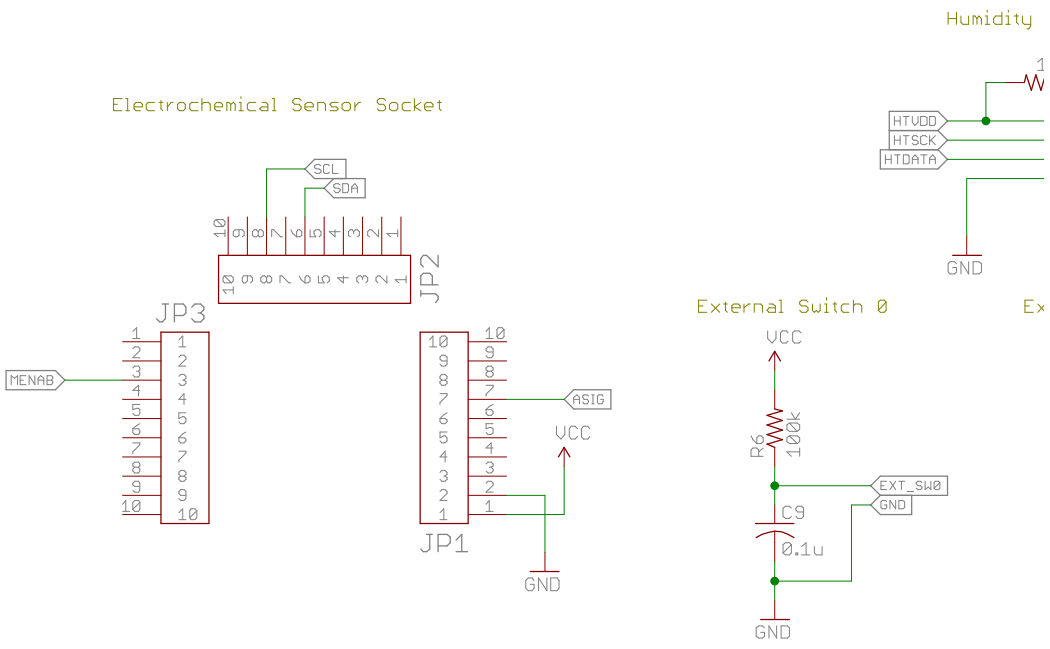
Humidity
1
HTVDD
HTSCK
HTDATA
GND
Electrochemical Sensor Socket
SCL
SDA
JP2
JP3
MENAB
ASIG
VCC
JP1
GND
External Switch 0
Ex
VCC
R6
100k
EXT_SW0
GND
C9
0.1u
GND
VCC
C10

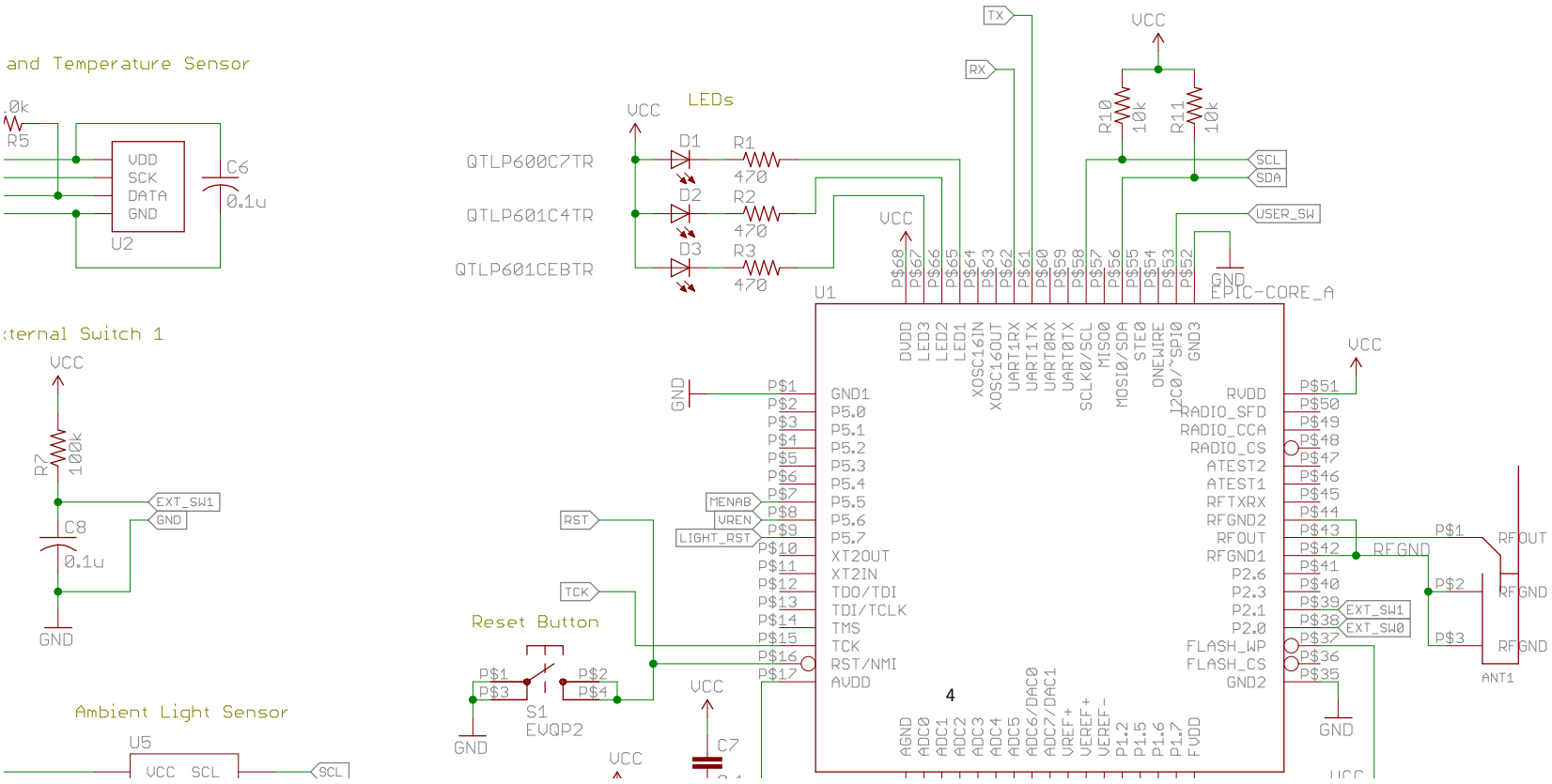
and Temperature Sensor
R5
VDD
SCK
DATA
GND
U2
C6
0.1u
LEDs
VCC
QTLP600C7TR
QTLP601C4TR
QTLP601CEBTR
D1
D2
D3
R1
R2
R3
470
TX
RX
R10
10k
R11
10k
SCL
SDA
USER_SW
U1
EPIC-CORE_A
GND1
P5.0
P5.1
P5.2
P5.3
P5.4
P5.5
P5.6
P5.7
XT2OUT
XT2IN
TDO/TDI
TDI/TCLK
TMS
TCK
RST/NMI
AVDD
RVDD
RADIO_SFD
RADIO_CCA
RADIO_CS
ATEST2
ATEST1
RFTXRX
RFGND2
RFOUT
RFGND1
P2.6
P2.3
P2.1
P2.0
FLASH_WP
FLASH_CS
GND2
EXT_SW1
EXT_SW0
RFGND
RFOUT
ANT1
MENAB
VREN
LIGHT_RST
RST
TCK
Reset Button
S1
EVQP2
C7
ternal Switch 1
R7
100k
C8
0.1u
EXT_SW1
GND
Ambient Light Sensor
U5
VCC
SCL

Top and Bottom Layers

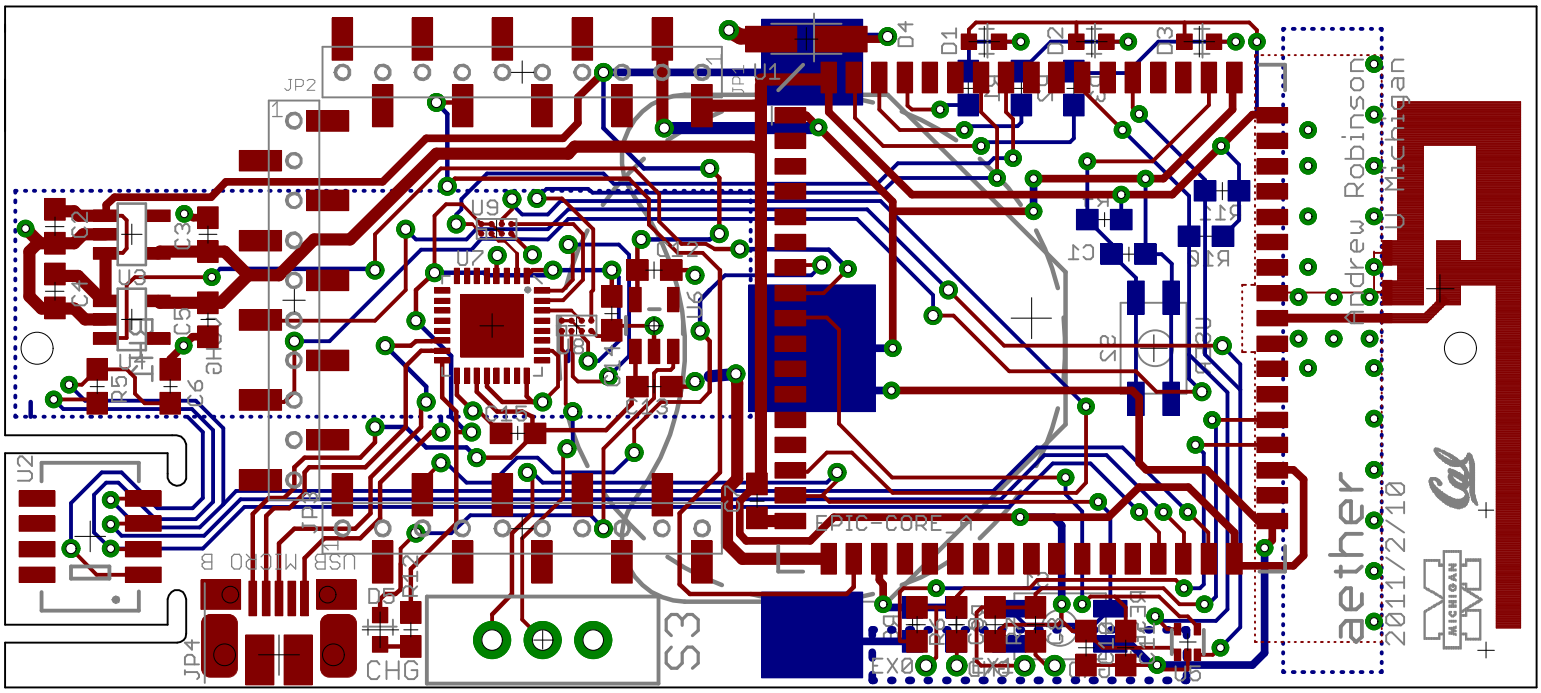

Top Layer

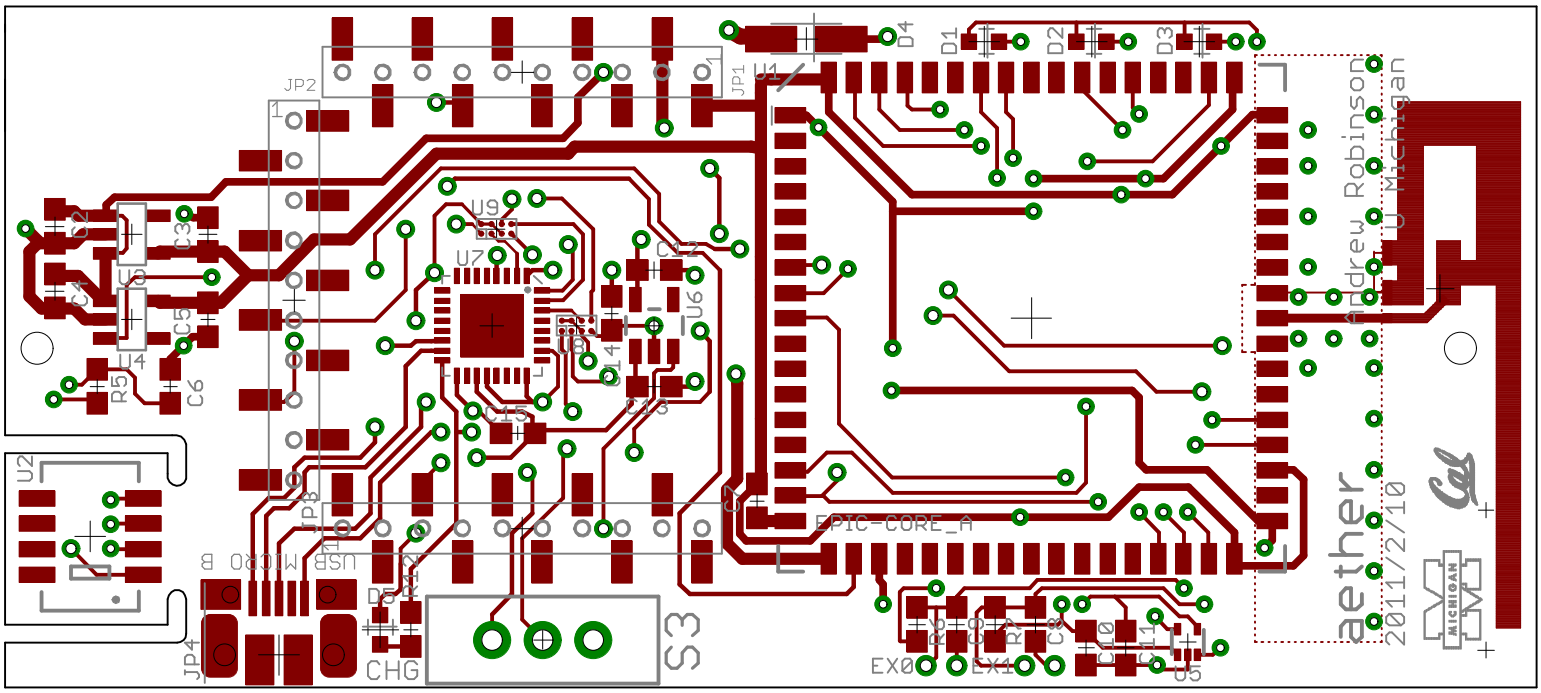

JP2
JP1
U1
D4
D1
D2
D3
U9
U7
U6
C12
C14
C13
C15
C2
C3
C4
C5
C6
U4
R5
U2
JP3
USB MICRO B
JP4
CHG
S3
EPIC-CORE_A
EX0
EX1
aether
2011/2/10
Andrew Robinson
U Michigan

Bottom Layer

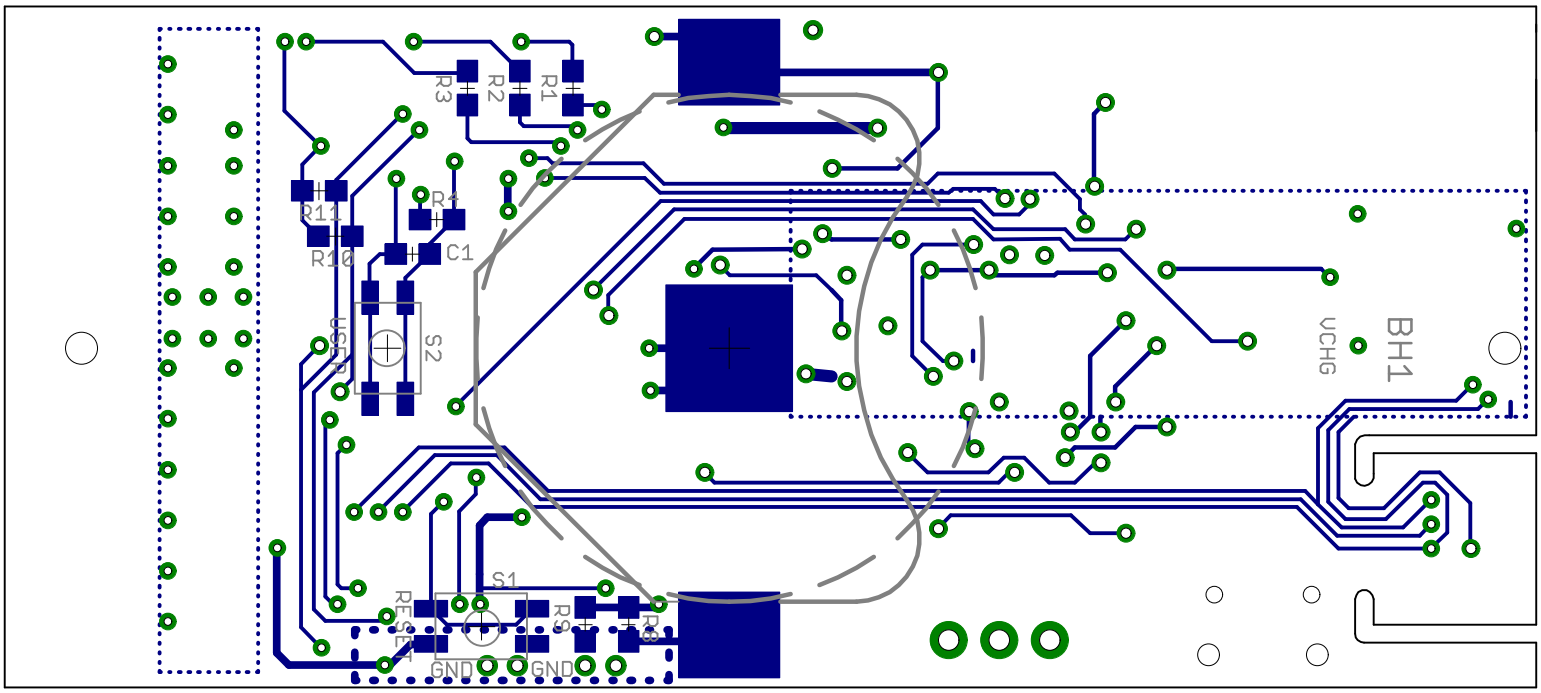

Top Copper Layer

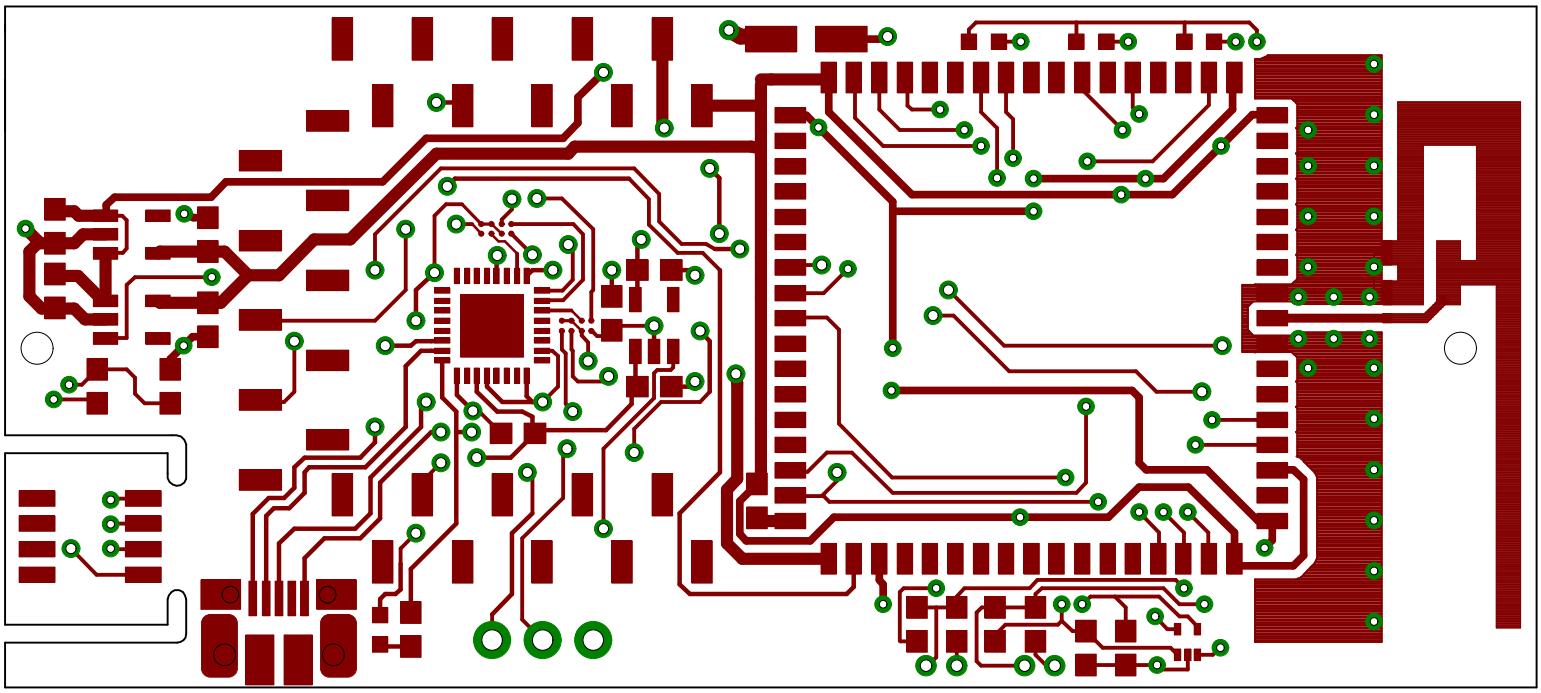

Bottom Copper Layer

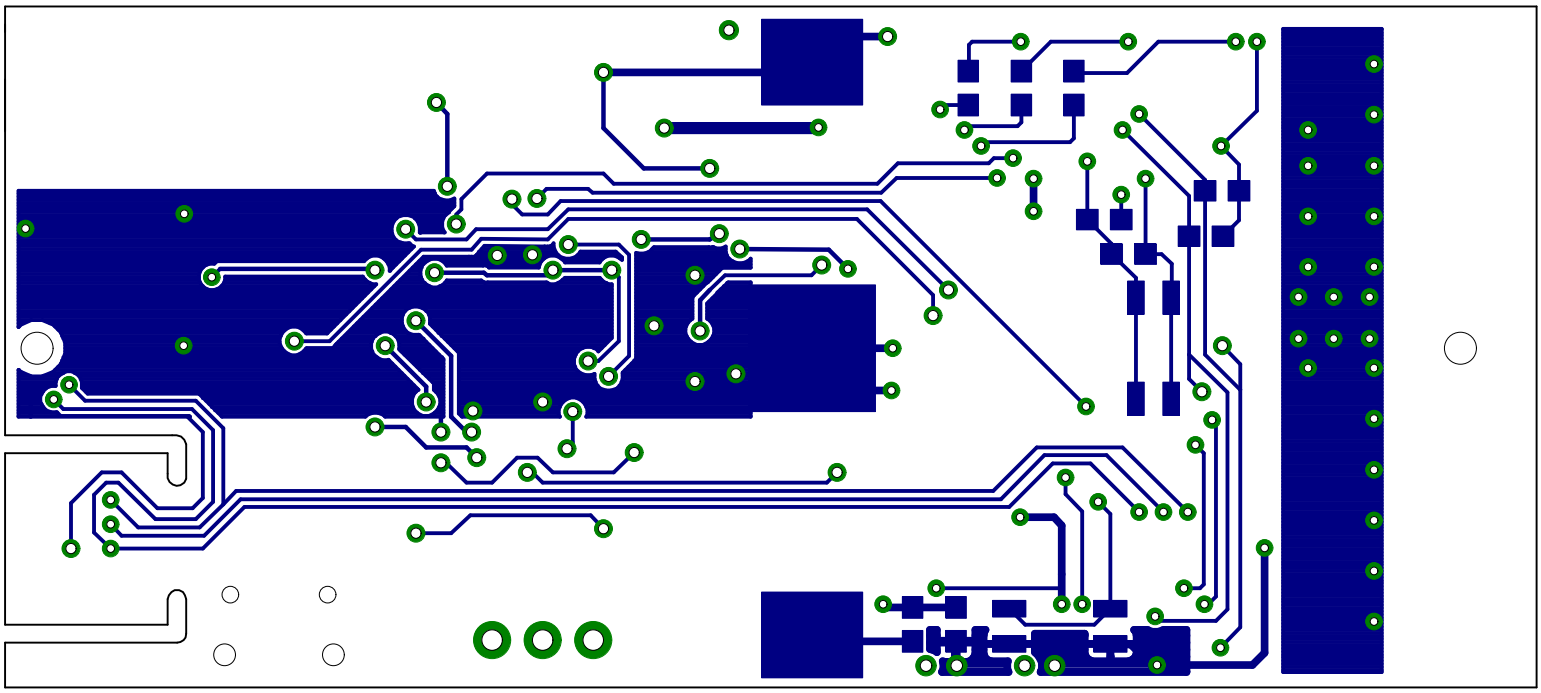

Top Paste Layer with Silkscreen

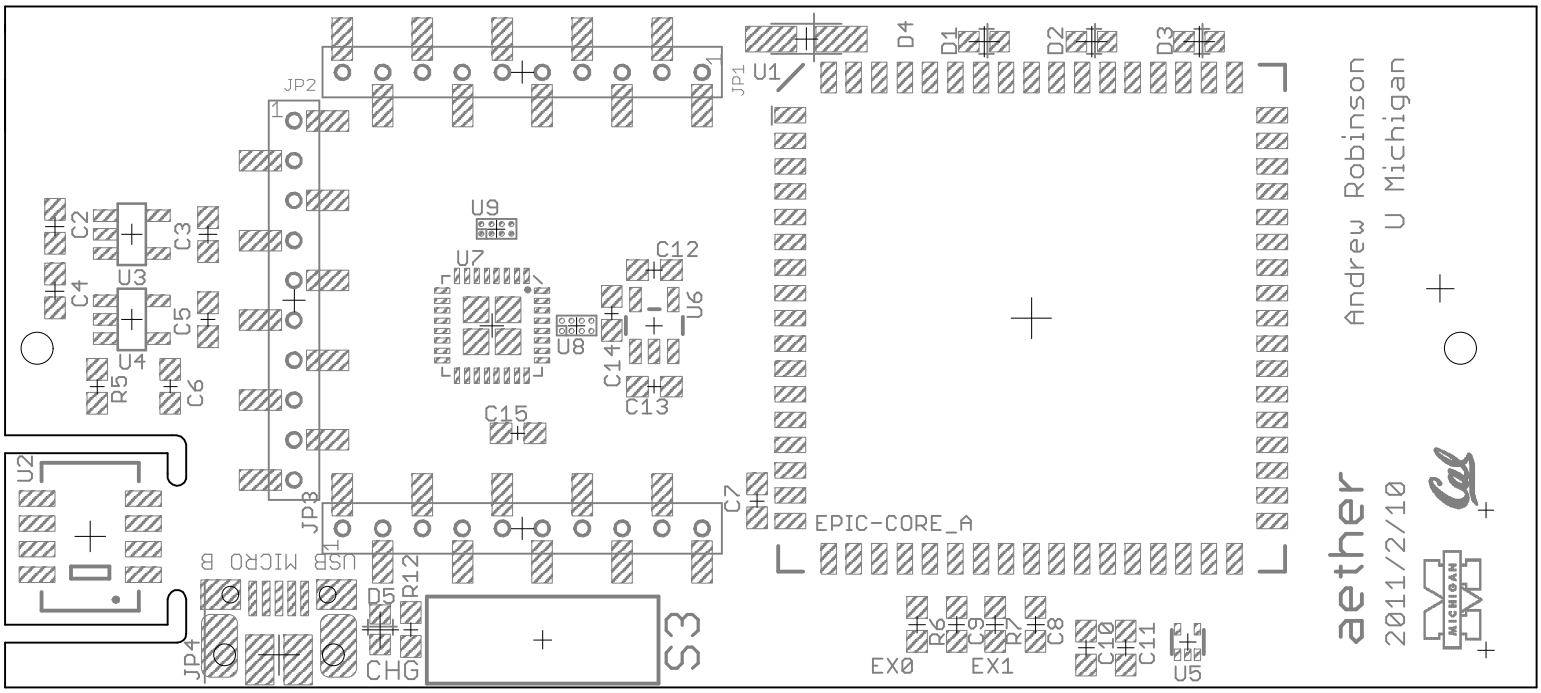

Bottom Paste Layer with Silkscreen

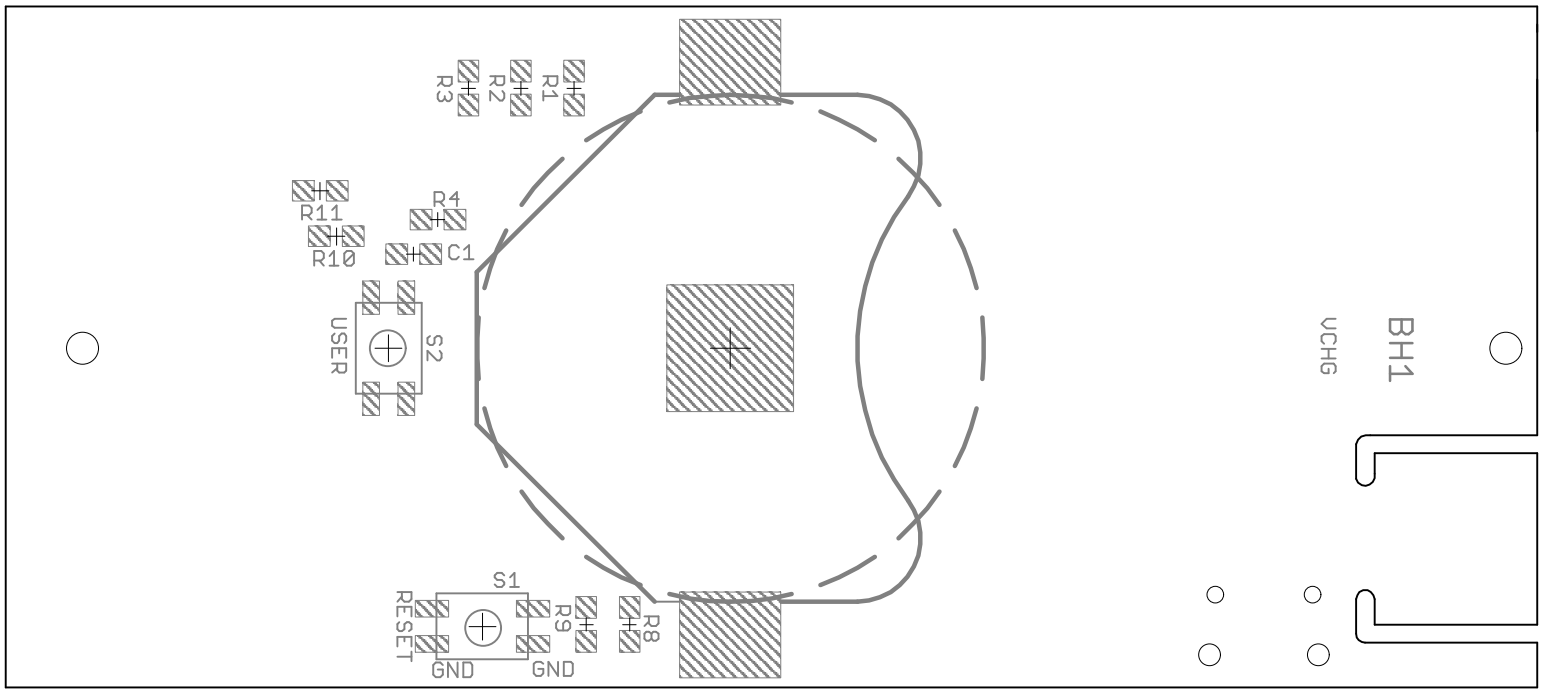

Top and Bottom Layers 1:1 Scale

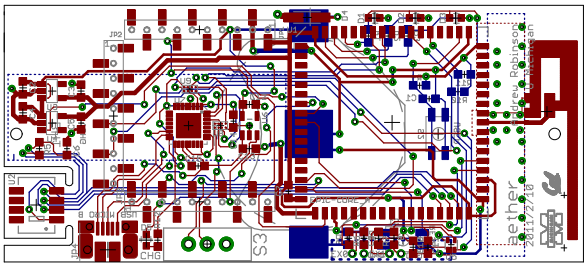

Top Layer 1:1 Scale

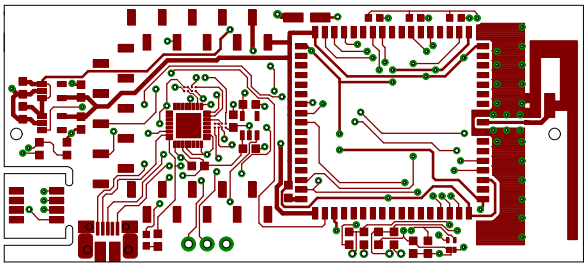
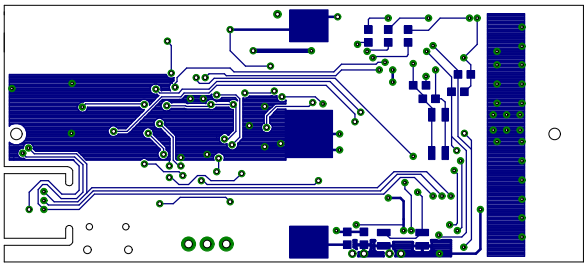
Bottom Copper Layer 1:1 Scale