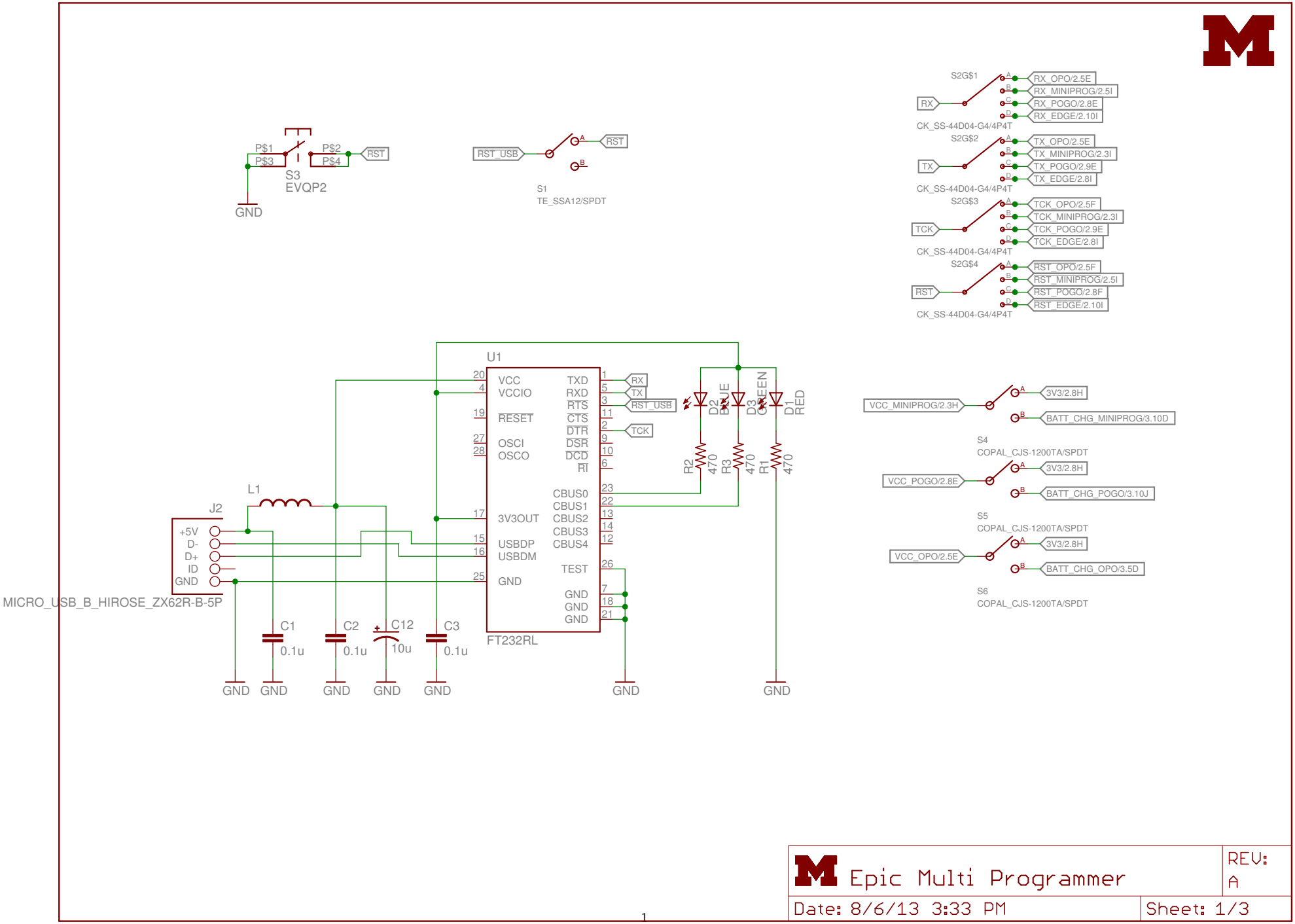

Epic Multi Programmer

REV: A

Date: 8/6/13 3:33 PM

Sheet: 1/3

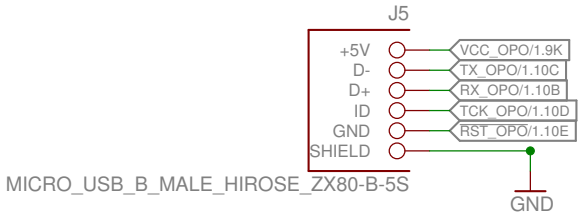

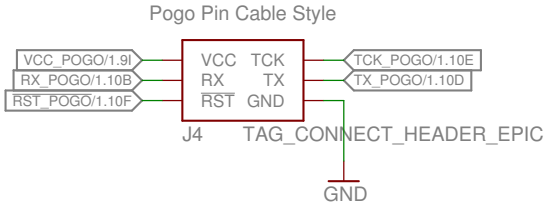

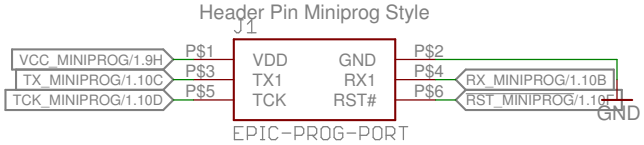

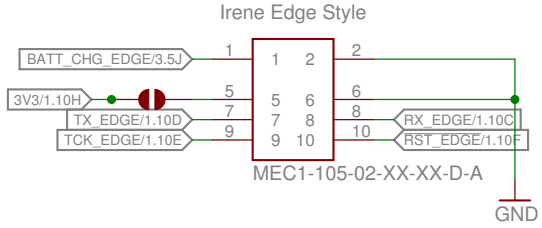

Epic Multi Programmer	REV: A
Date: 8/6/13 3:33 PM	Sheet: 2/3

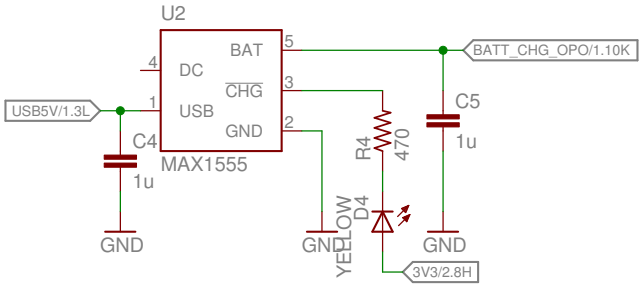

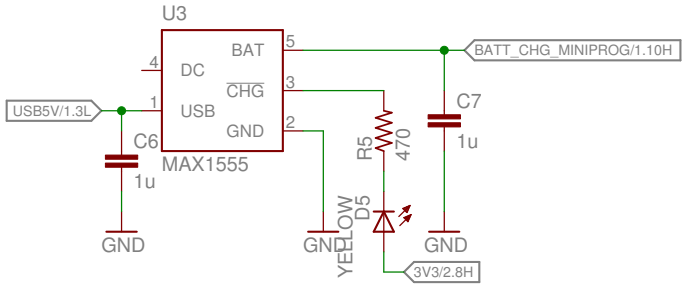

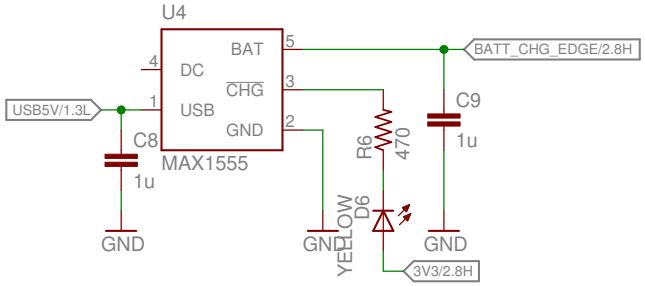

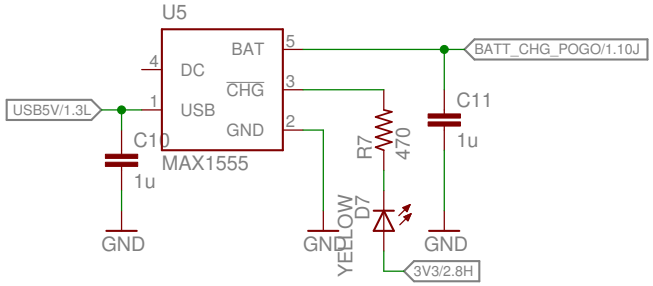

Epic Multi Programmer	REV: A
Date: 8/6/13 3:33 PM	Sheet: 3/3

Top and Bottom Layers

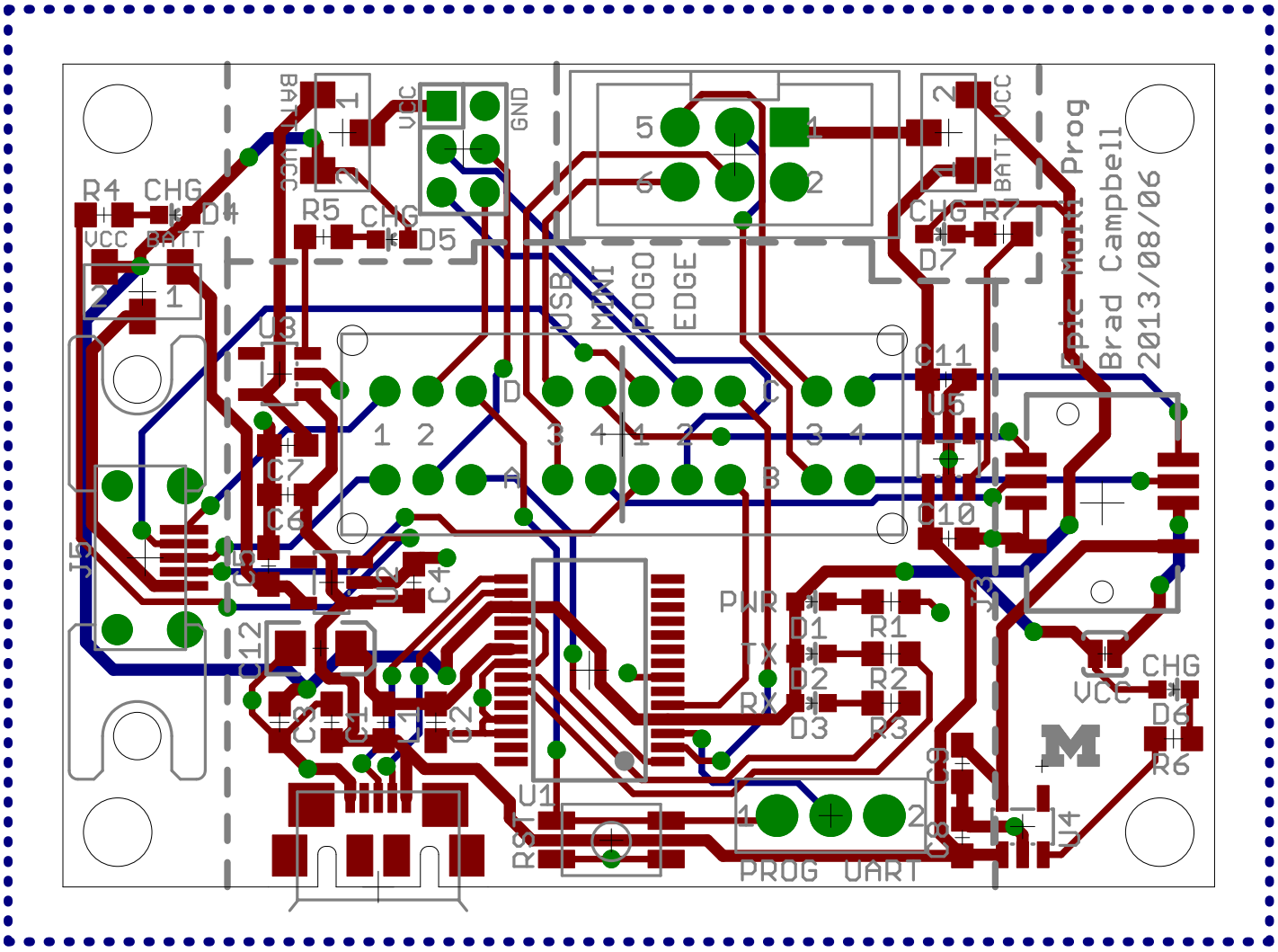

Top Layer

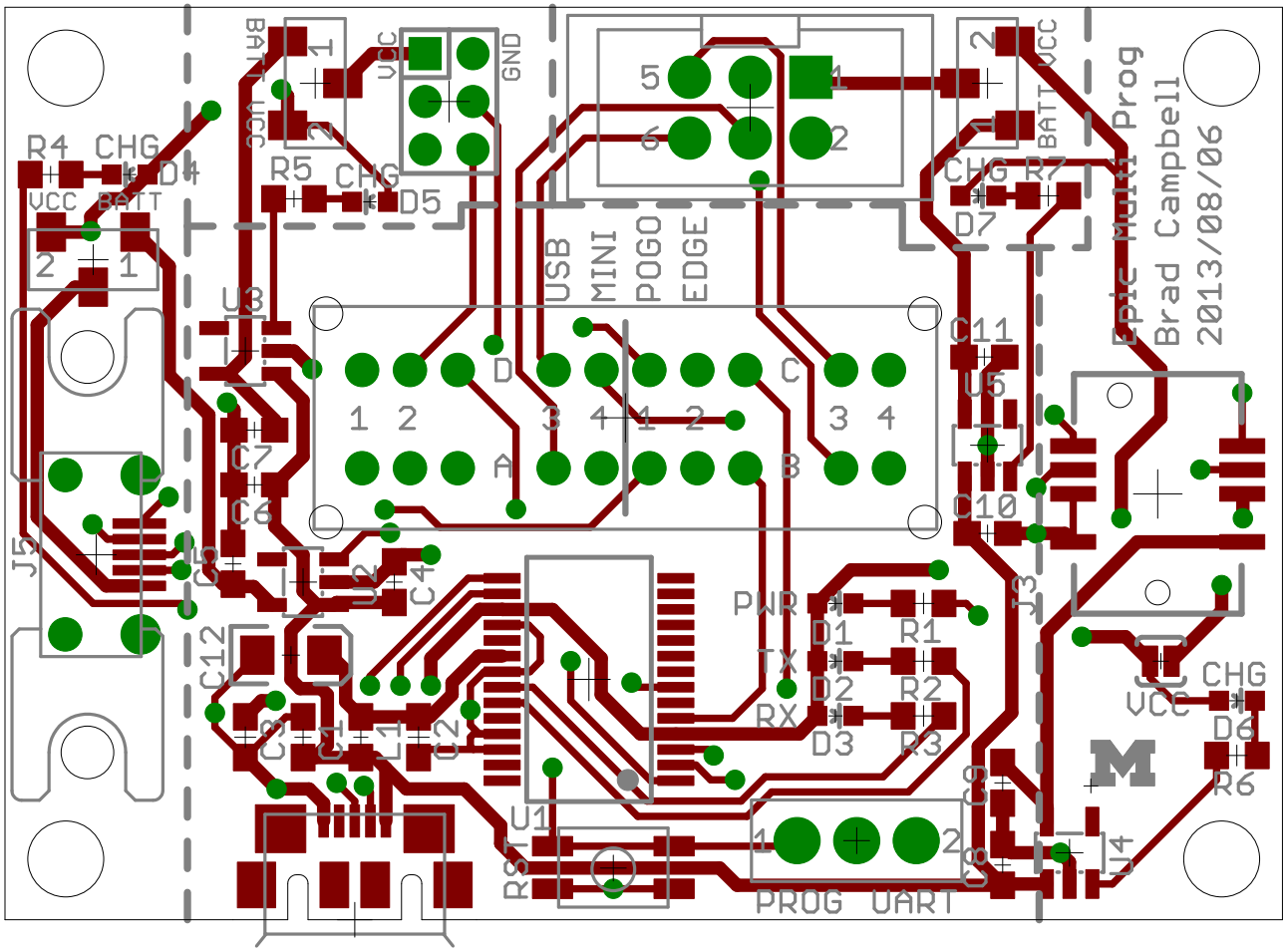

Epic Multi Prog
Brad Campbell
2013/08/06
USB
MINI
POGO
EDGE
PWR
TX
RX
PROG
UART
VCC
BATT
GND
CHG

Bottom Layer

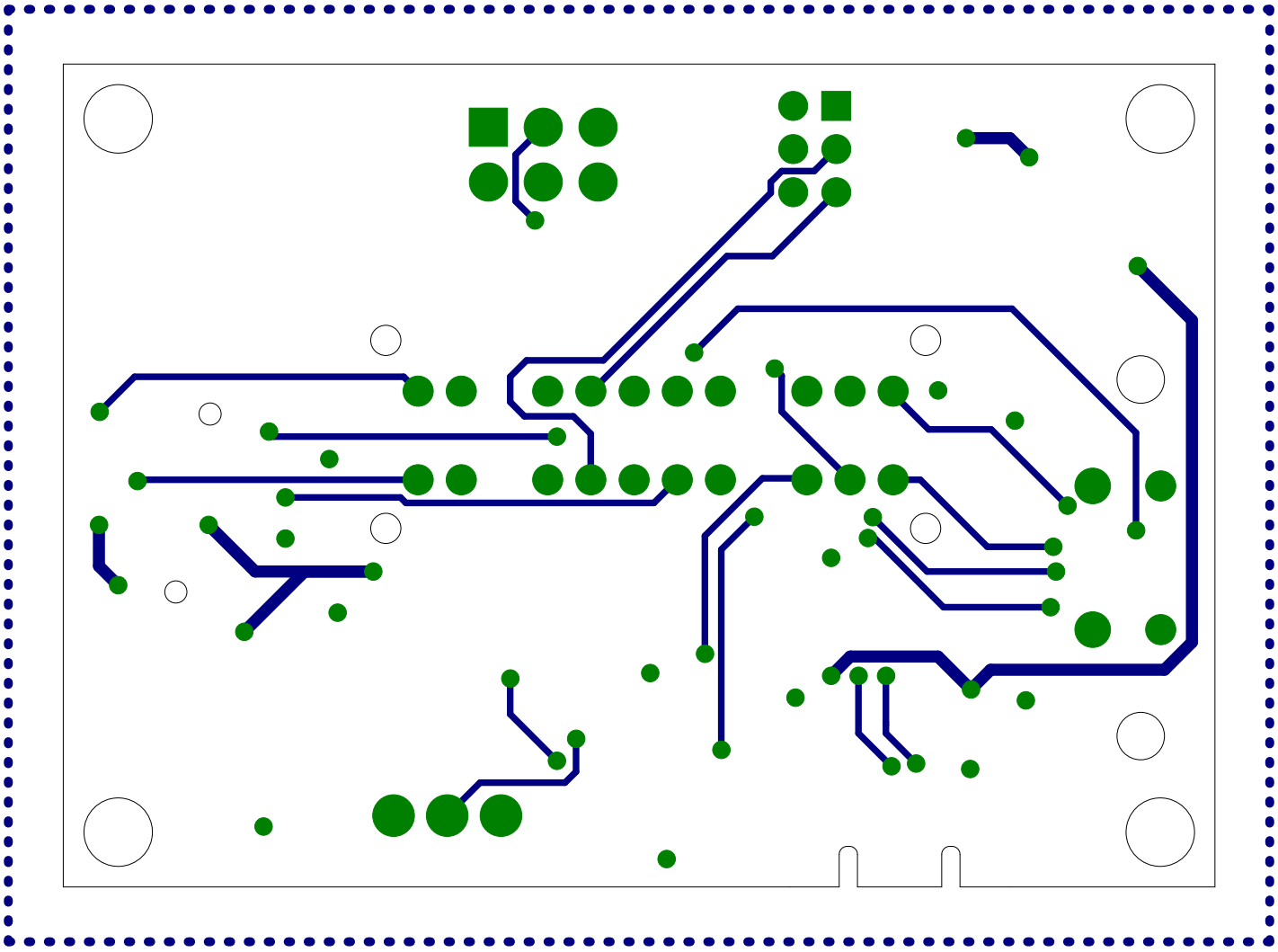

Top Copper Layer

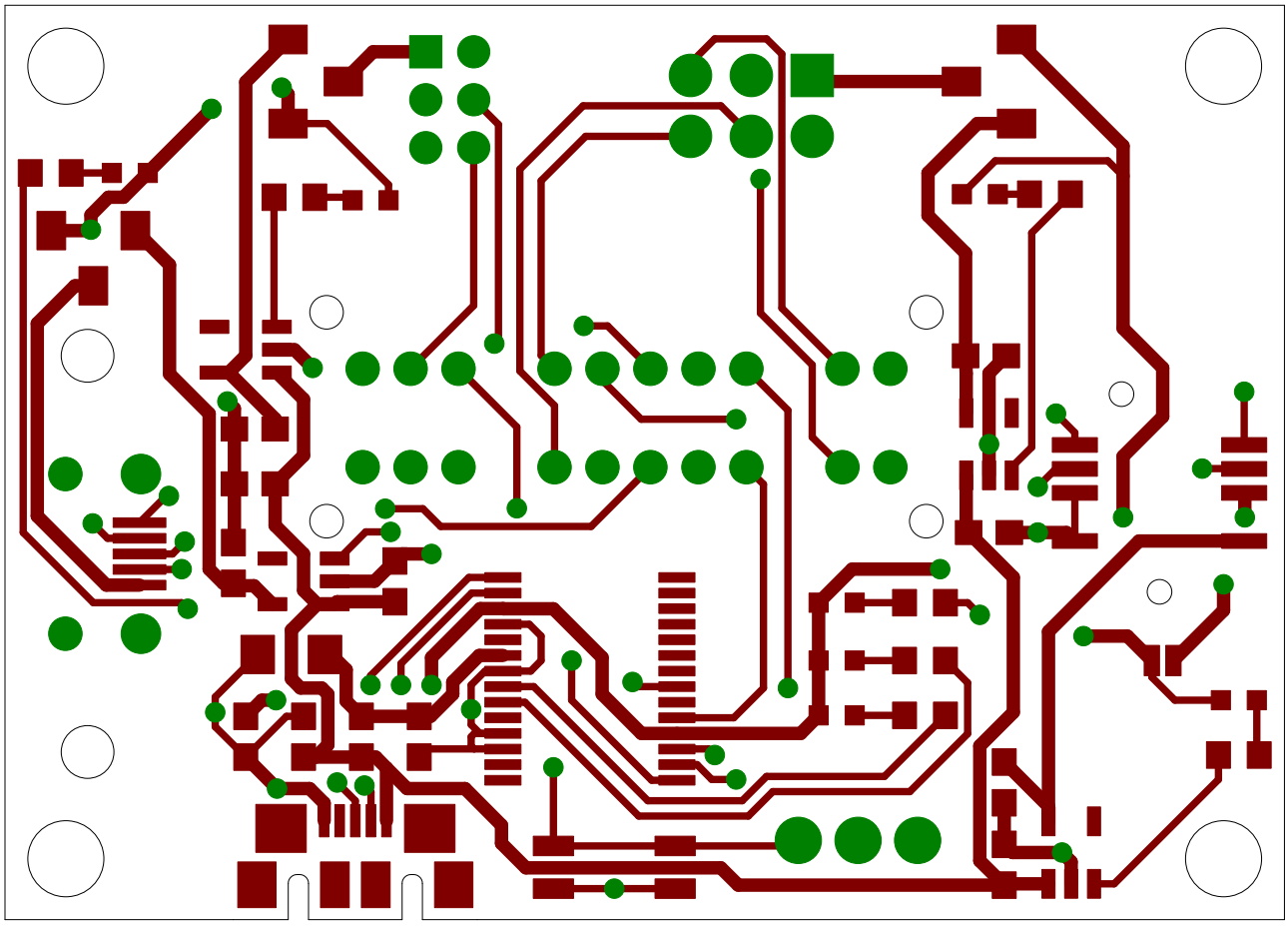

Bottom Copper Layer

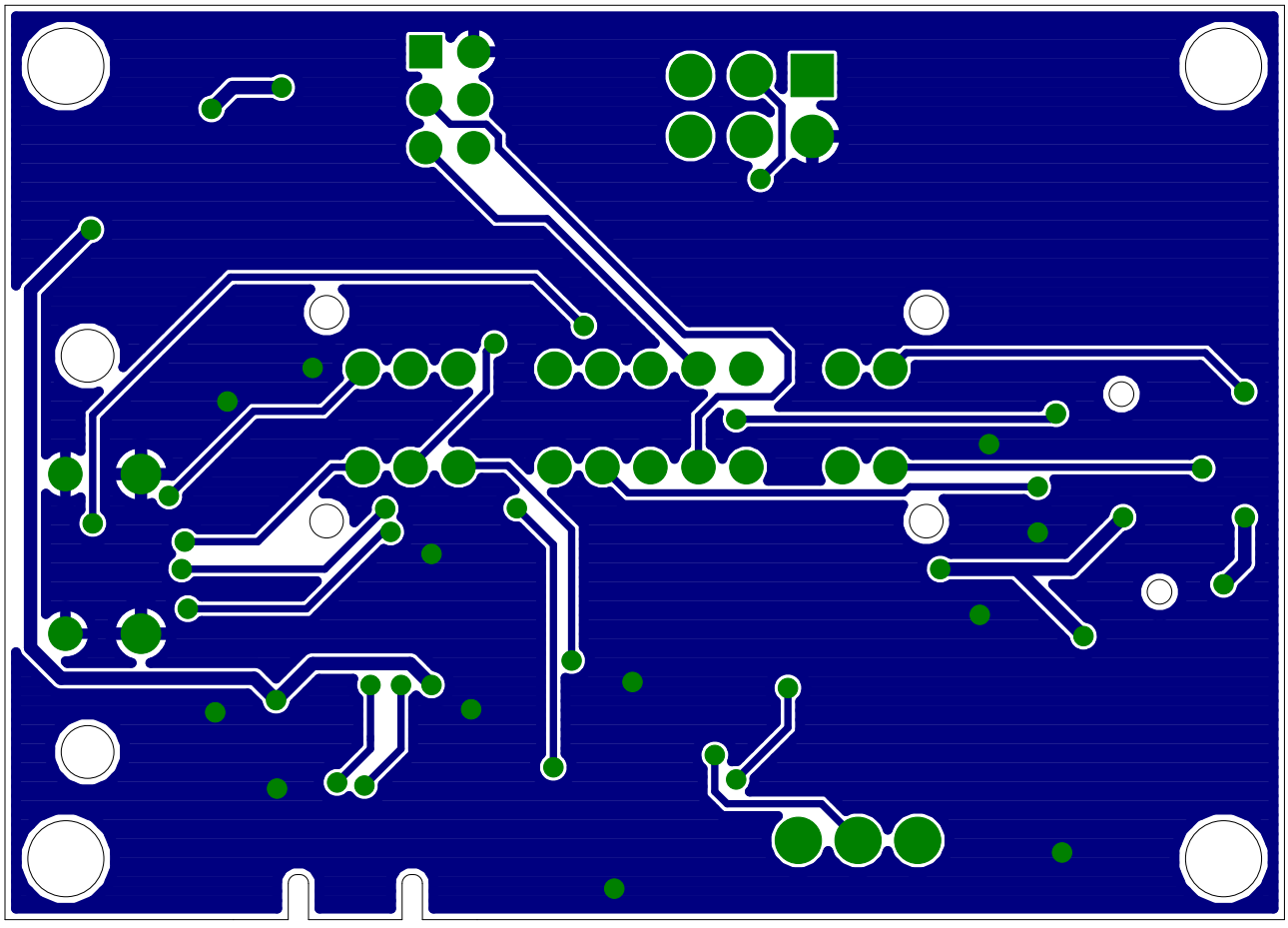

Top Paste Layer with Silkscreen

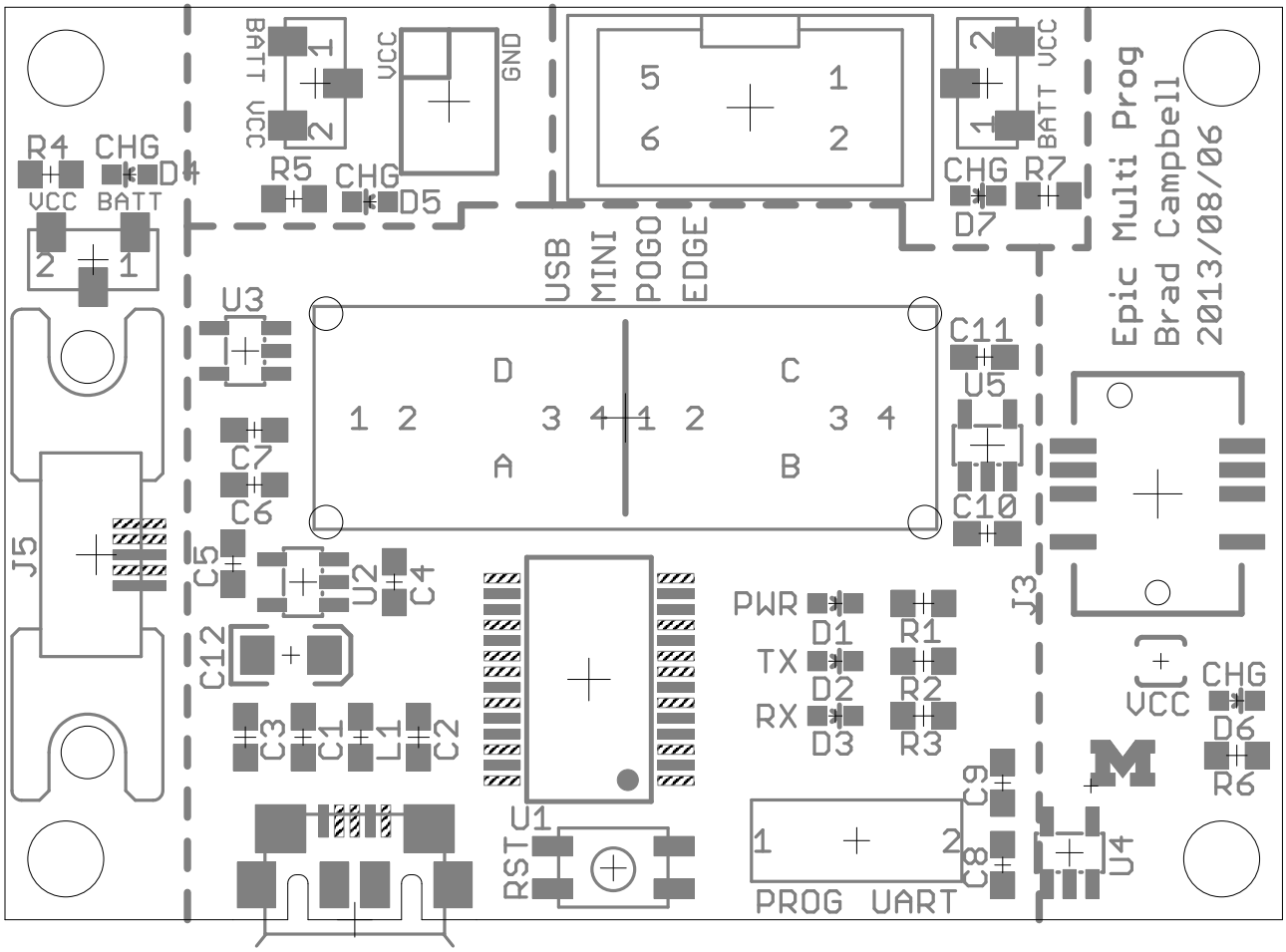

Bottom Paste Layer with Silkscreen

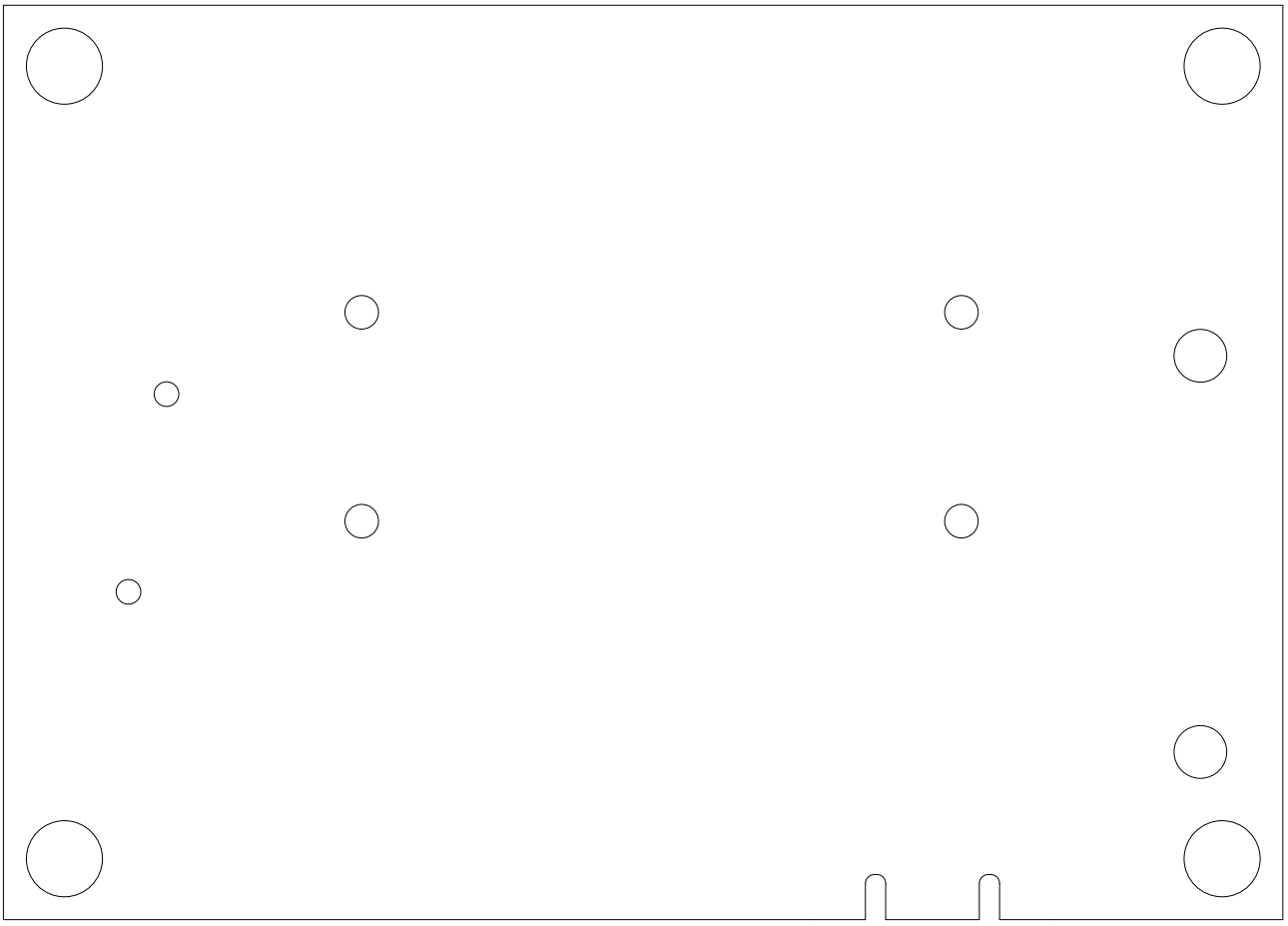

Top and Bottom Layers 1:1 Scale

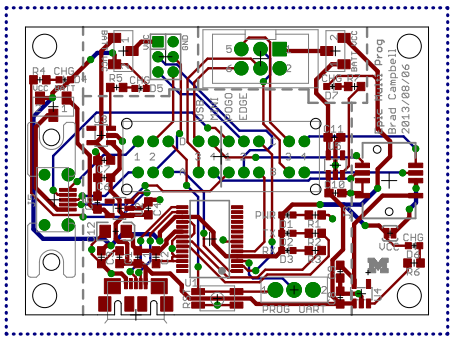

Top Layer 1:1 Scale

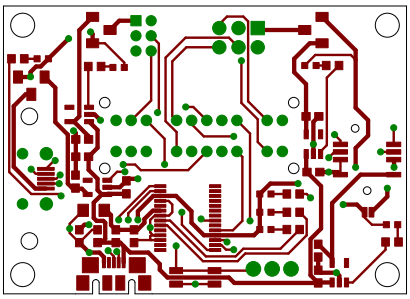

Bottom Copper Layer 1:1 Scale

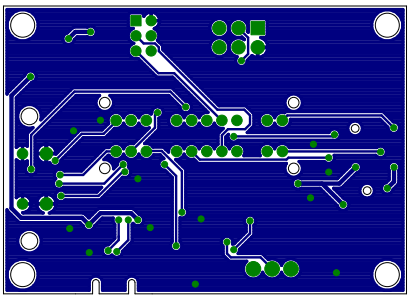

Qty	Value	Device
3	0.1u	C-EUC0603
8	1u	C-EUC0603
1	10u	CAP_POL1206
1	BLUE	LED0603
1	RED	LED0603
1	GREEN	LED0603
4	YELLOW	LED0603
1	EPIC-PROG-PORT	EPIC-PROG-PORT
1	MICRO_USB_B_HIROSE_ZX62R-B-5P	MICRO_USB_B_HIROSE_ZX62R-B-5P
1	MEC1-105-02-XX-XX-D-A	MEC1-105-02-XX-XX-D-A
1	TAG_CONNECT_HEADER_EPIC	TAG_CONNECT_HEADER_EPIC
1	MICRO_USB_B_MALE_HIROSE_ZX80-B-5S	MICRO_USB_B_MALE_HIROSE_ZX80-B-5S
1		INDUCTOR0603
7	470	R-US_R0603
1	TE_SSA12/SPDT	TE_SSA12/SPDT
1	CK_SS-44D04-G4/4P4T	CK_SS-44D04-G4/4P4T
1	EVQP2	EVQP2
3	COPAL_CJS-1200TA/SPDT	COPAL_CJS-1200TA/SPDT
1	FT232RL	FT232RL
4	MAX1555	MAX1555

Package	Parts
C0603	C1, C2, C3
C0603	C4, C5, C6, C7, C8, C9, C10, C11
EIA3216	C12
LED-0603	D1
LED-0603	D2
LED-0603	D3
LED-0603	D4, D5, D6, D7
HEADER2X3X2MM	J1
USB_MICRO_B-HIROSE-ZX62R-B-5P	J2
MEC1-105-02-XX-XX-D-A	J3
2X3_MALE_SHROUDED_0.100	J4
USB_MICRO_B_MALE-HIROSE-ZX80-B-5S	J5
603	L1
R0603	R1, R2, R3, R4, R5, R6, R7
TE_SSA12/SPDT	S1
CK_SS-44D04-G4/4P4T	S2
EVQP2	S3
COPAL_CJS-1200TA/SPDT	S4, S5, S6
SSOP28	U1
SOT23-5L	U2, U3, U4, U5

Description	DIGIKEY	MOUSER
CAPACITOR, European symbol	445-1316-1-ND	
CAPACITOR, European symbol	445-1321-1-ND	
Capacitor Polarized	478-1655-1-ND	
LEDs	160-1837-1-ND	
LEDs	160-1835-1-ND	
LEDs	160-1834-1-ND	
LEDs	160-1184-1-ND	
	3M9173-ND	
USB Micro B Connector	H11574CT-ND	
	SAM8115-ND	
2x3 Male Shrouded Header 0.100	3M15451-ND	
CONN PLUG MCR USB B PCB VERT	H11612-ND	798-ZX80-B-5S
Inductors	240-2373-1-ND	
RESISTOR, American symbol	P470GDKR-ND	
SWITCH SLIDE SPDT 2POS SSA SER	450-1602-ND	
Through hole 4P4T switch.	CKN10389-ND	
	P11084SCT-ND	
SWITCH SLIDE SPDT SMD J-LEAD	563-1021-2-ND	
FTDI chip	768-1007-1-ND	
Dual-Input USB/AC Adapter 1-Cell Li+ Battery Chargers	MAX1555EZK+TCT-ND	

DIGIREEL
445-1316-6-ND
445-1321-6-ND
478-1655-6-ND
160-1837-6-ND
160-1835-6-ND
160-1834-6-ND
160-1184-6-ND

H11574DKR-ND

240-2373-6-ND
P470GDKR-ND

563-1021-6-ND
768-1007-6-ND
MAX1555EZK+TDKR-ND