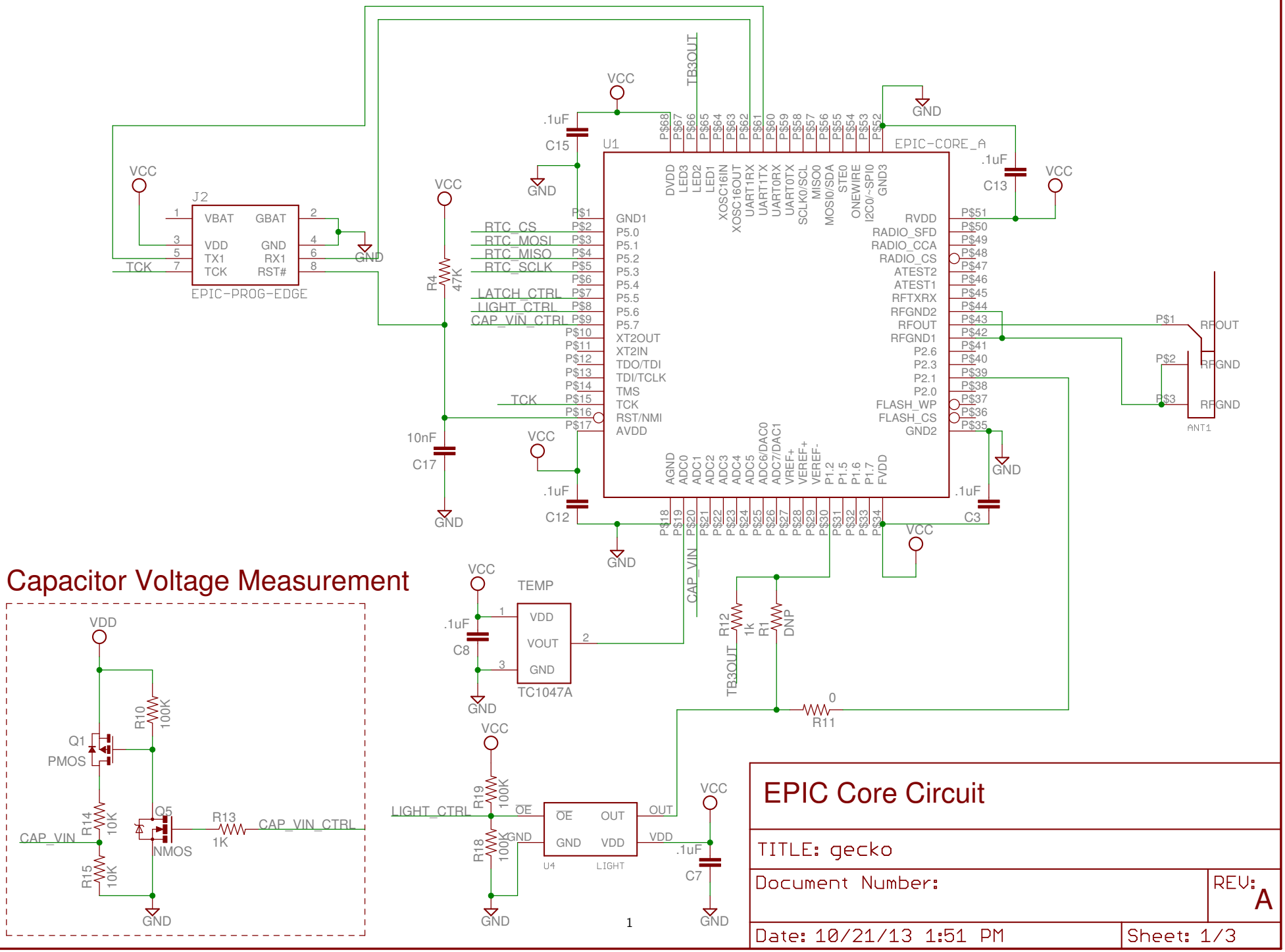

Capacitor Voltage Measurement
EPIC-CORE_A
U1
J2
EPIC-PROG-EDGE
VBAT
GBAT
VDD
GND
TX1
RX1
TCK
RST#
TB3OUT
VCC
GND
.1uF
C15
C13
C12
C3
C8
C7
10nF
C17
R4
47K
RTC_CS
RTC_MOSI
RTC_MISO
RTC_SCLK
LATCH_CTRL
LIGHT_CTRL
CAP_VIN_CTRL
TCK
DVDD
LED3
LED2
LED1
XOSC16IN
XOSC16OUT
UART1RX
UART1TX
UART0RX
UART0TX
SCLK0/SCL
MISO0
MOSI0/SDA
STE0
ONEWIRE
I2C0/~SPI0
GND3
GND1
P5.0
P5.1
P5.2
P5.3
P5.4
P5.5
P5.6
P5.7
XT2OUT
XT2IN
TDO/TDI
TDI/TCLK
TMS
TCK
RST/NMI
AVDD
RVDD
RADIO_SFD
RADIO_CCA
RADIO_CS
ATEST2
ATEST1
RFTXRX
RFGND2
RFOUT
RFGND1
P2.6
P2.3
P2.1
P2.0
FLASH_WP
FLASH_CS
GND2
AGND
ADC0
ADC1
ADC2
ADC3
ADC4
ADC5
ADC6/DAC0
ADC7/DAC1
VREF+
VEREF+
VEREF-
P1.2
P1.5
P1.6
P1.7
FVDD
RFOUT
RFGND
RFGND
ANT1
TEMP
VDD
VOUT
GND
TC1047A
R12
1k
R1
DNP
R11
0
R19
100K
R18
100K
LIGHT_CTRL
OE
OUT
VDD
U4
LIGHT
VDD
R10
100K
Q1
PMOS
R14
10K
R15
10K
Q5
NMOS
R13
1K
CAP_VIN
CAP_VIN_CTRL
EPIC Core Circuit
TITLE: gecko
Document Number:
REV: A
Date: 10/21/13 1:51 PM
Sheet: 1/3

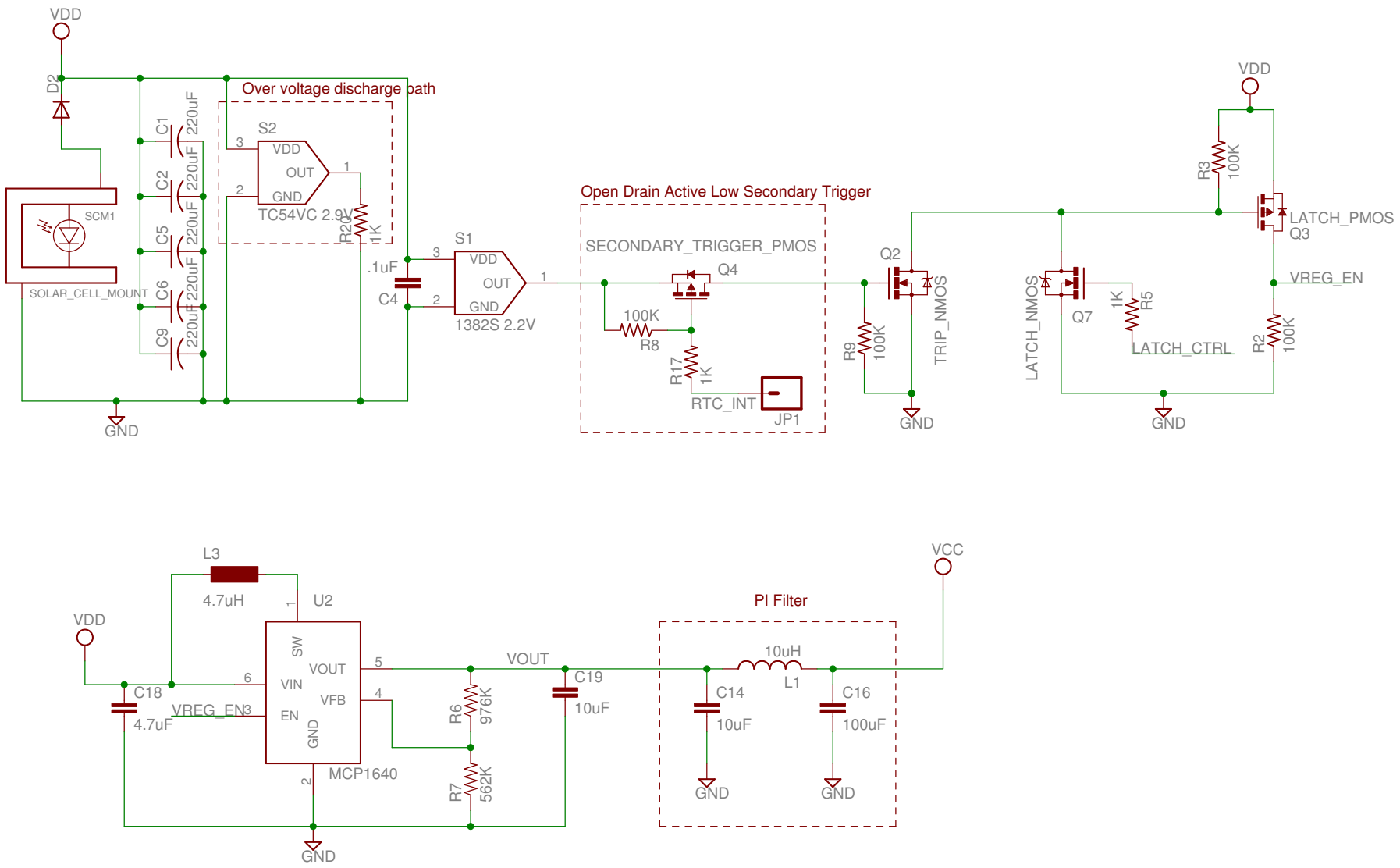

Voltage Detection Circuit
Switching Regulator

TITLE: gecko

Document Number:

REV:

Date: 10/21/13 1:51 PM

Sheet: 2/3

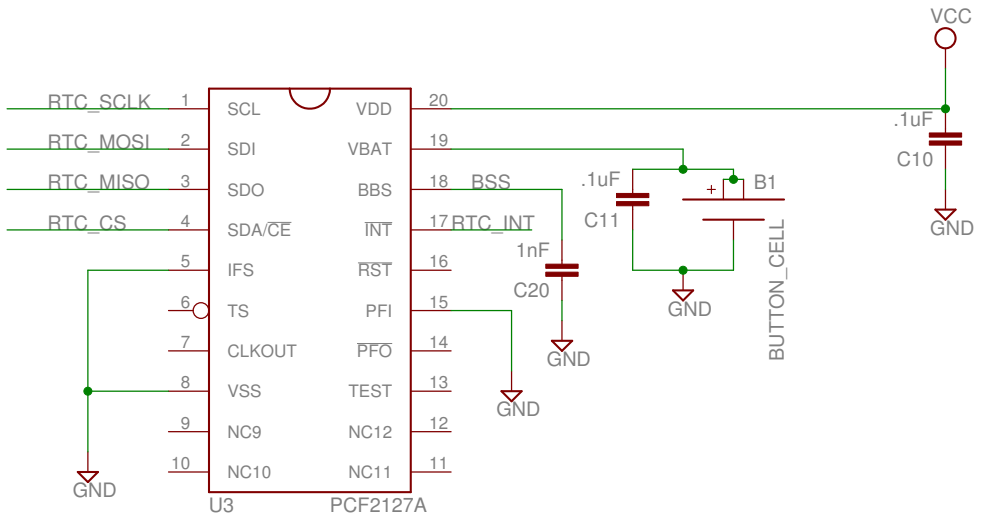

Real Time Clock

TITLE: gecko	
Document Number:	REV:
Date: 10/21/13 1:51 PM	Sheet: 3/3

Top and Bottom Layers

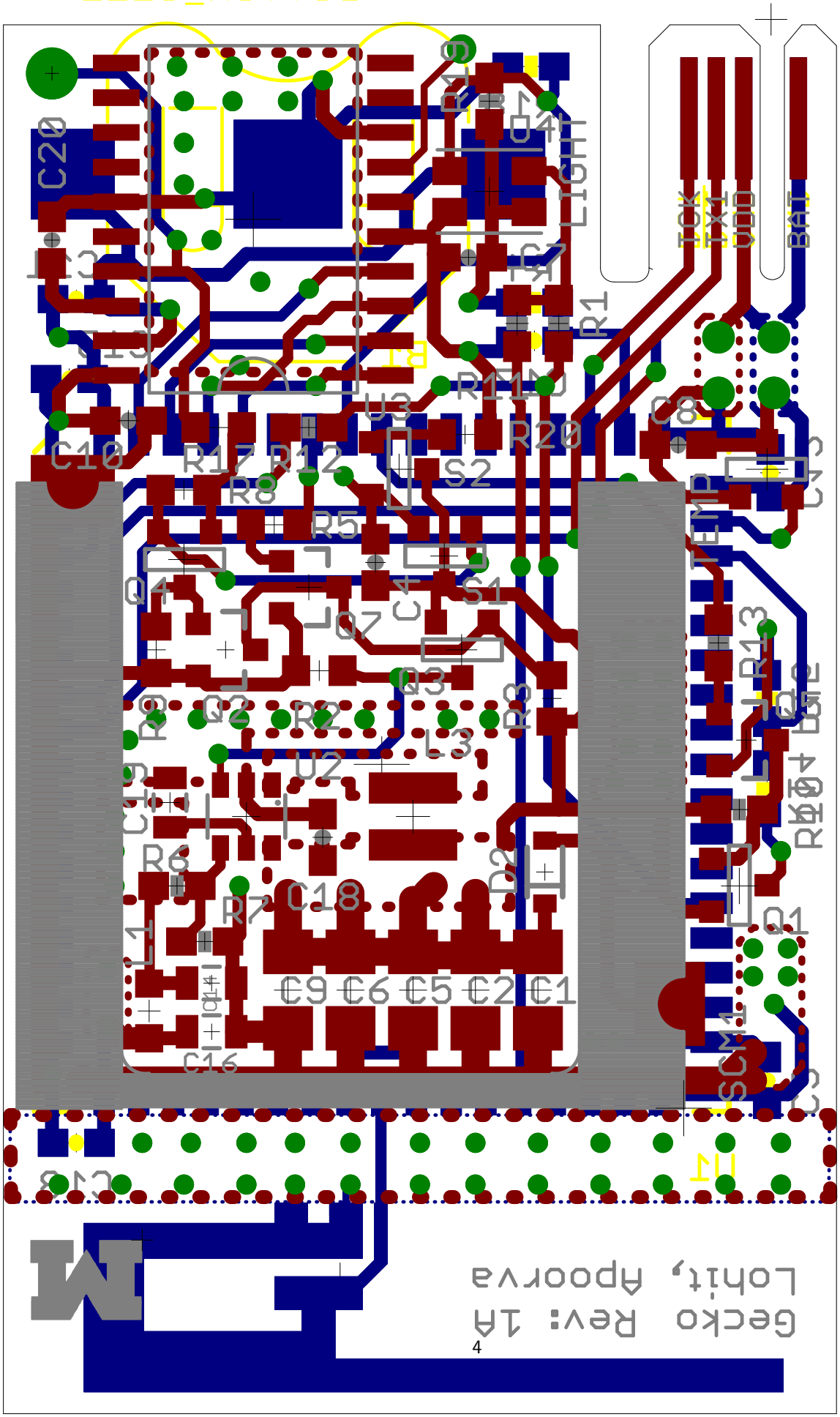

Top Layer

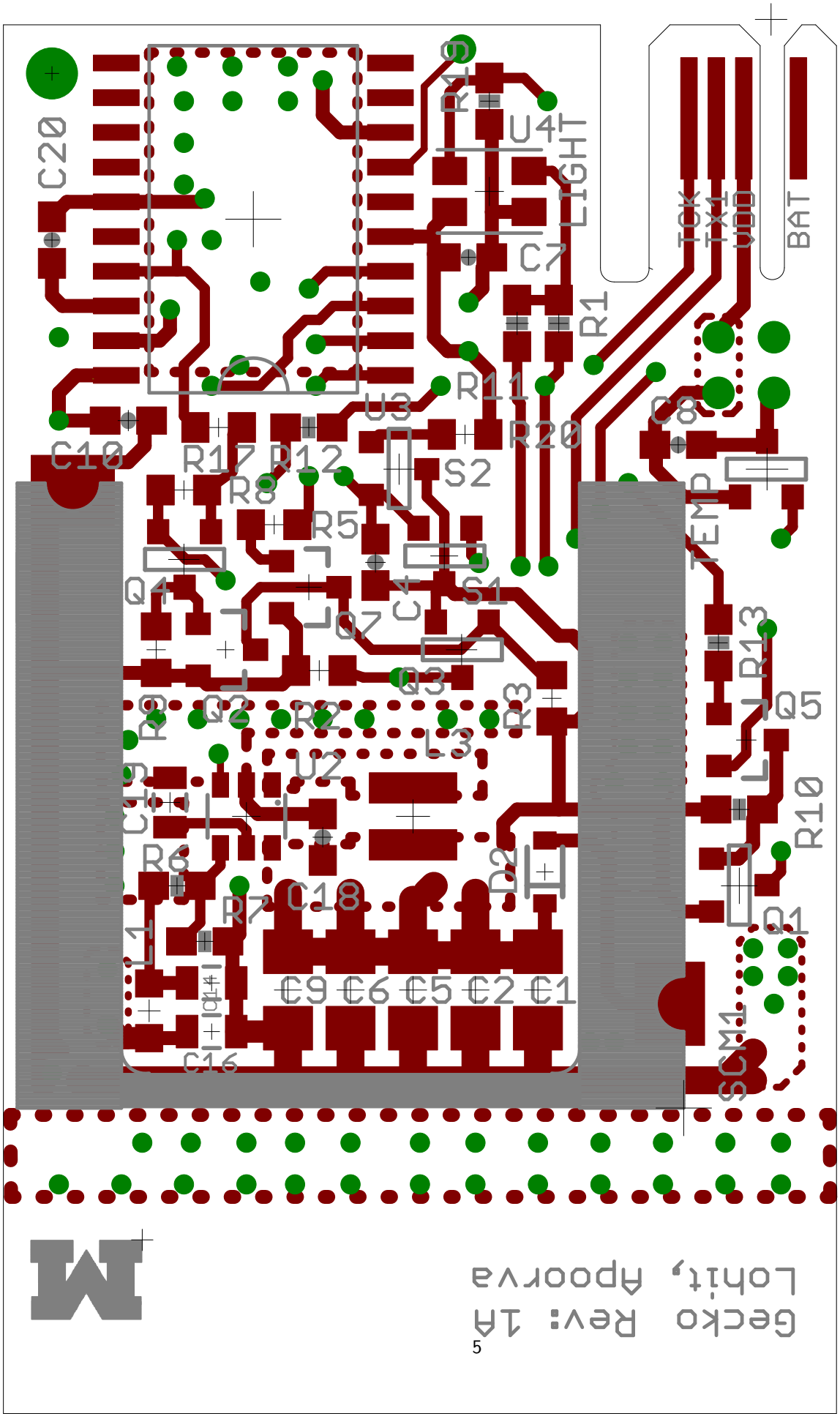

Gecko Rev: 1A
Lohit, Apoorva

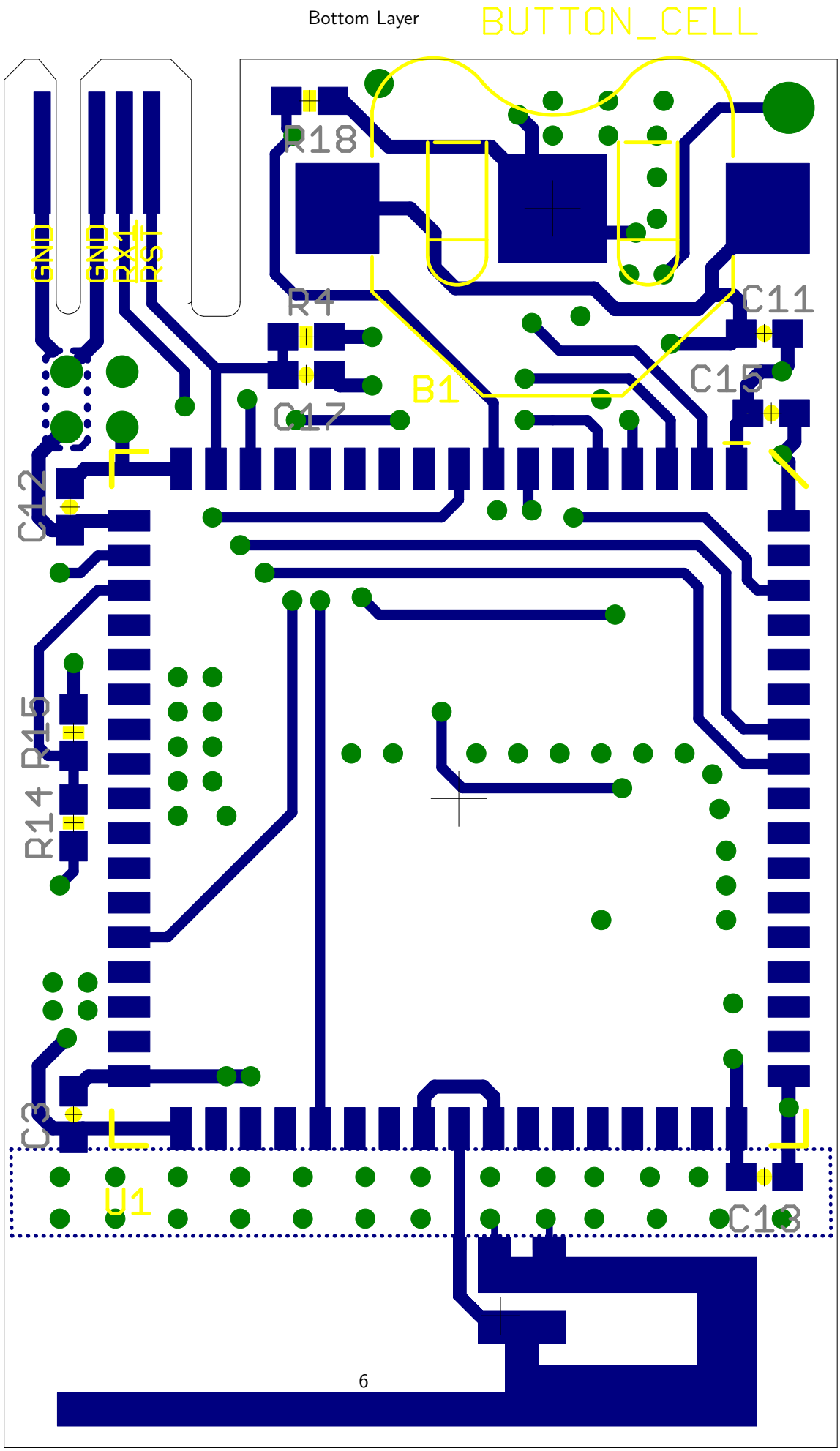
BUTTON_CELL
R18
GND
GND
RX1
RST
R4
C11
C15
B1
C17
C12
R15
R14
C3
U1
C13

Top Copper Layer

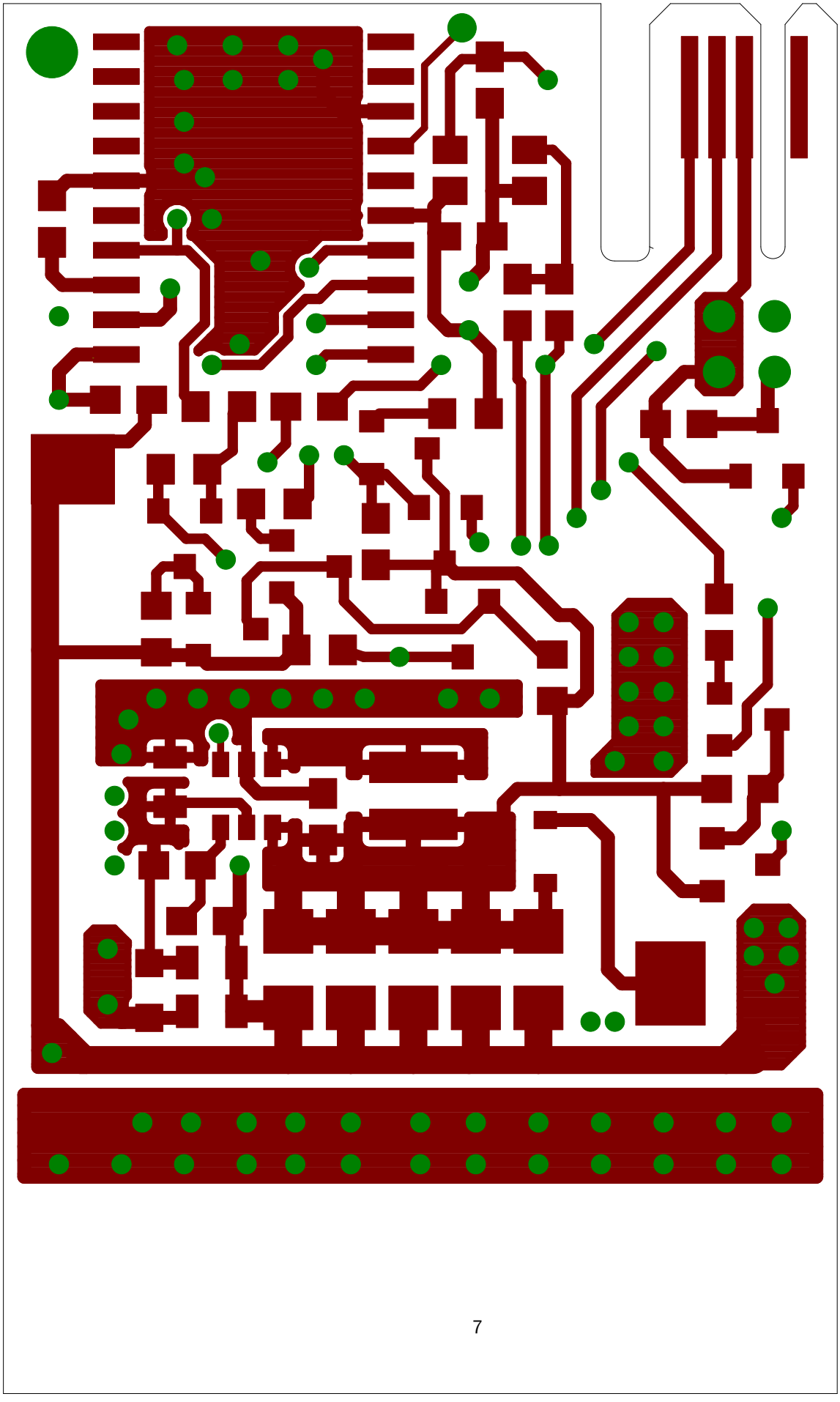

Bottom Copper Layer

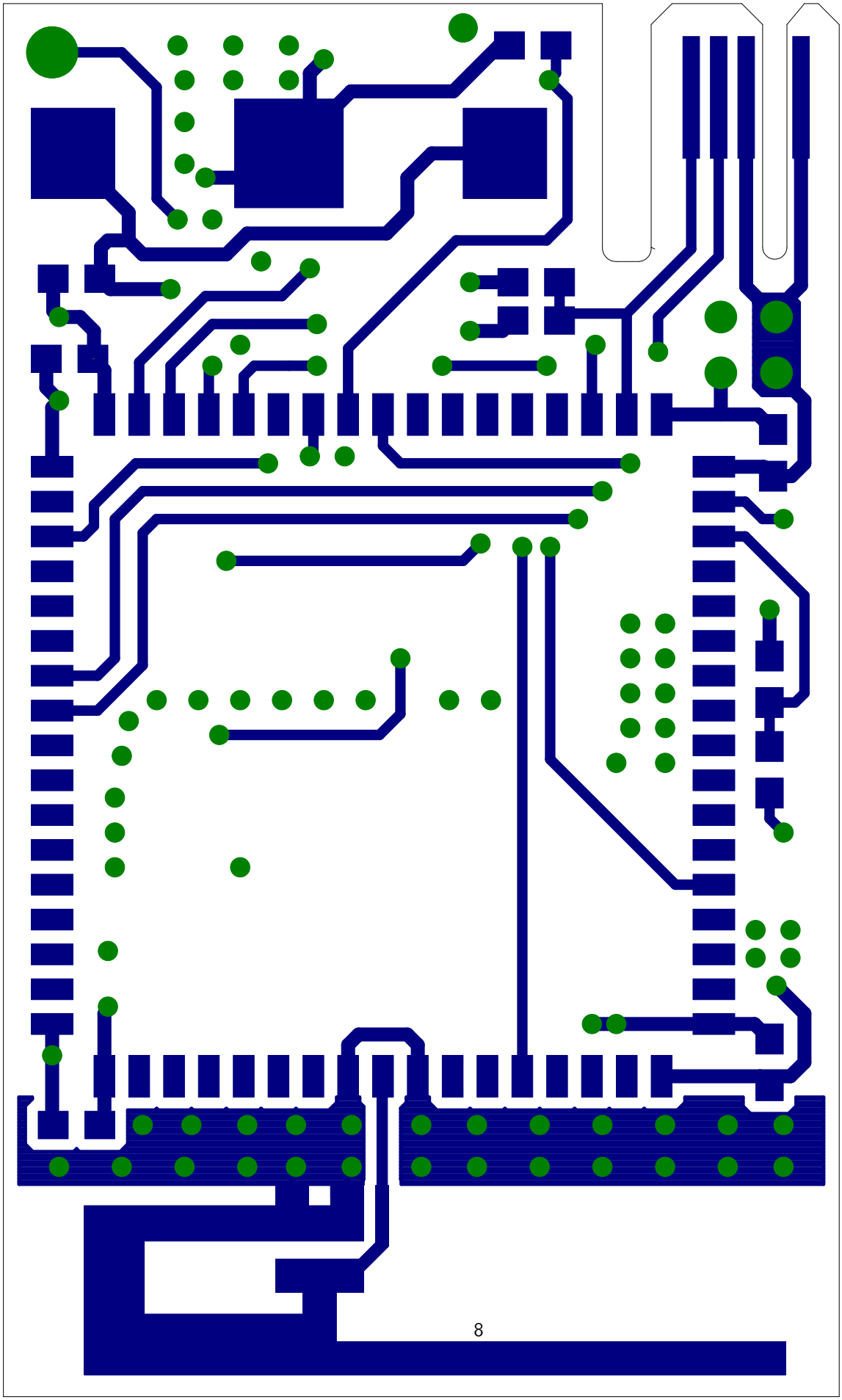

Top Paste Layer with Silkscreen

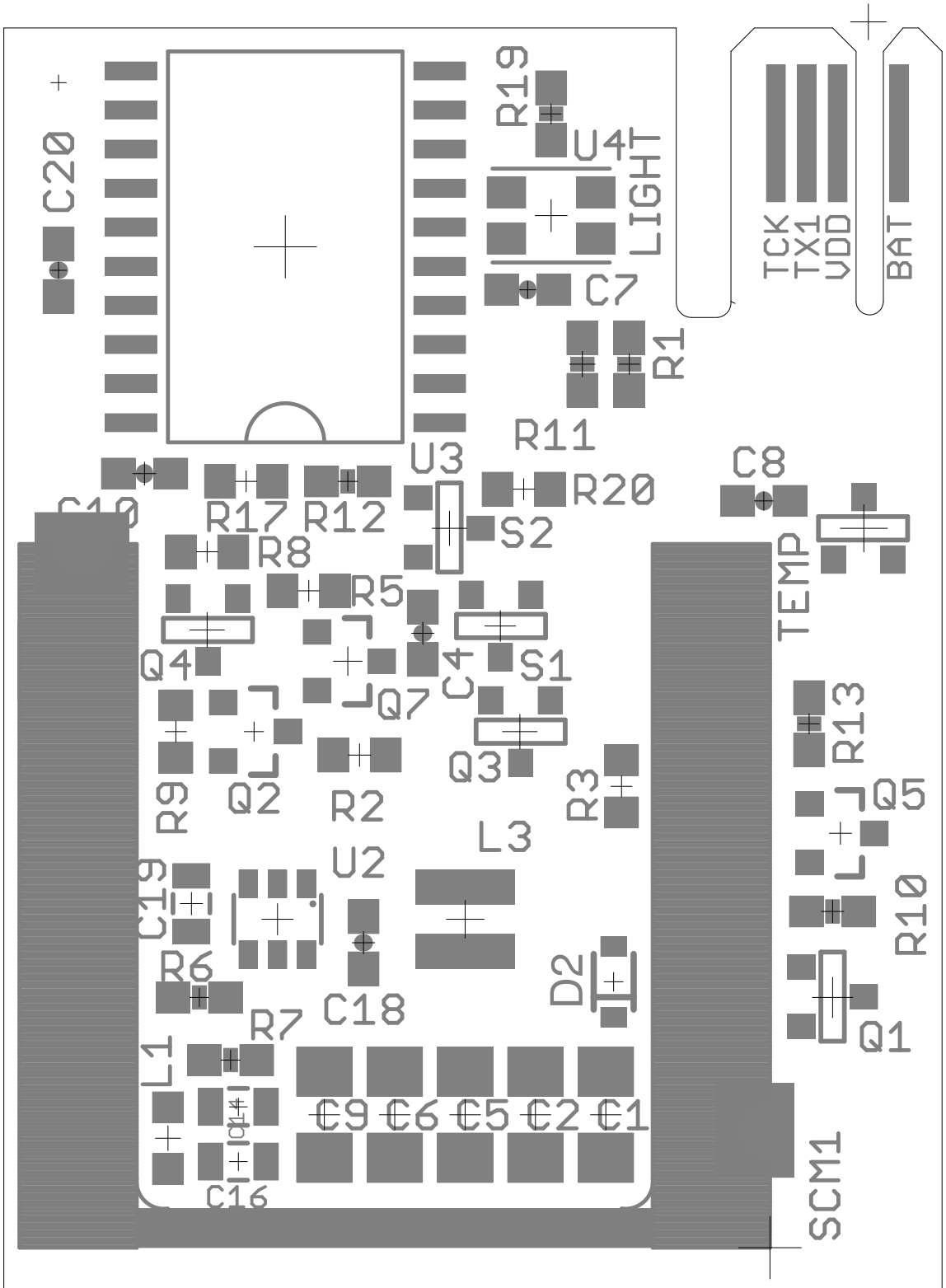

Gecko Rev: 1A
Lohit, Apoorva

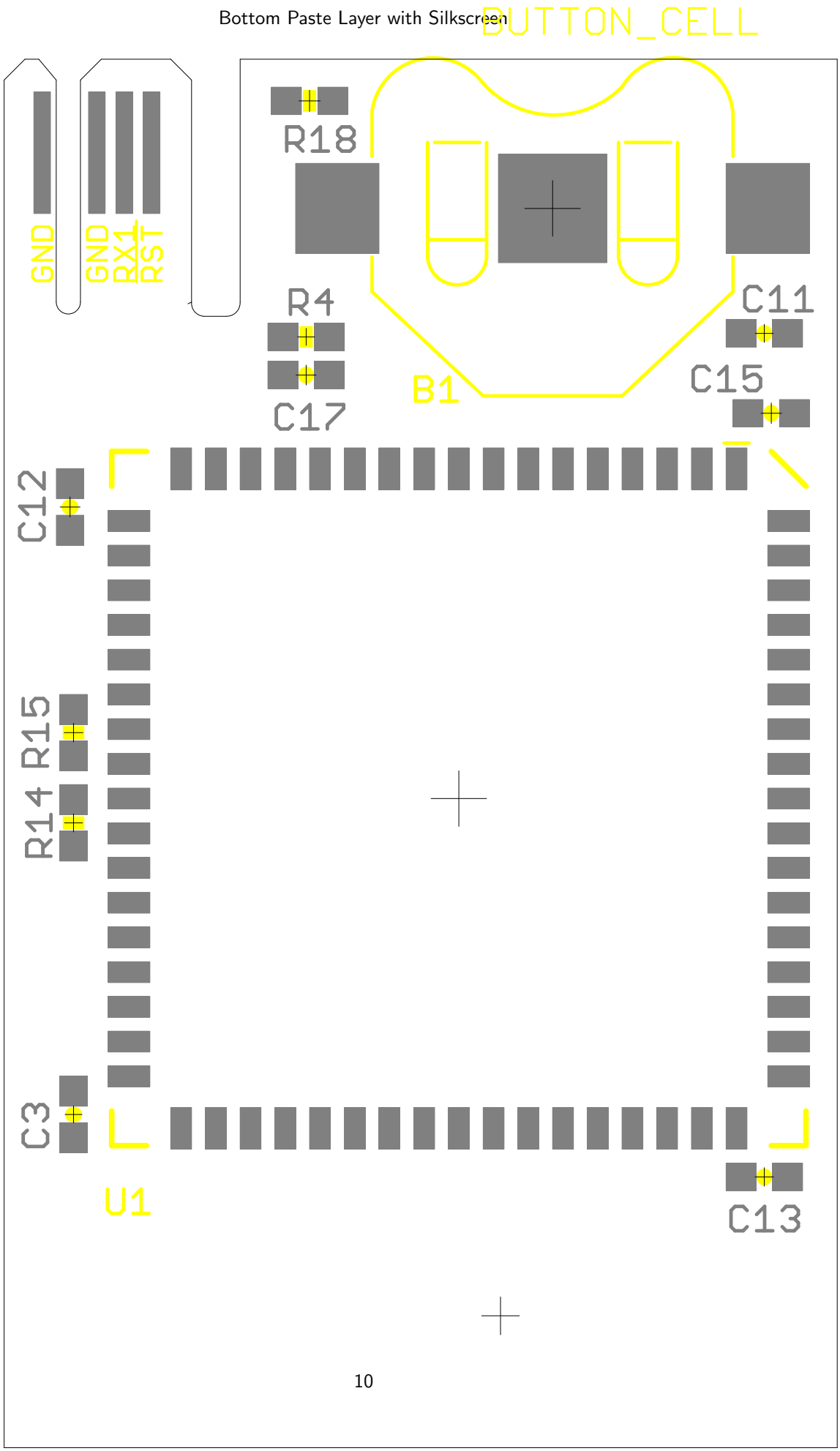
BUTTON_CELL
GND
GND
RX1
RST
R18
R4
C17
B1
C11
C15
C12
R15
R14
C3
U1
C13

Top and Bottom Layers 1:1 Scale

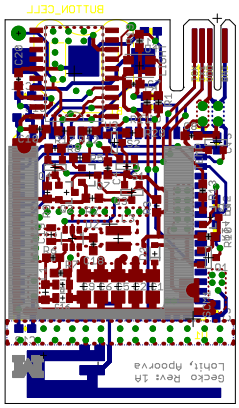

Top Layer 1:1 Scale

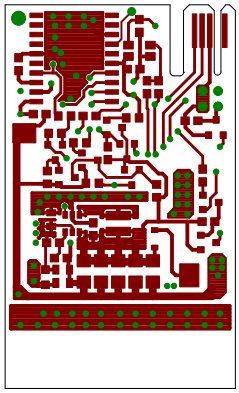
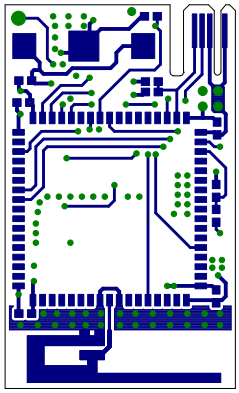
Bottom Copper Layer 1:1 Scale