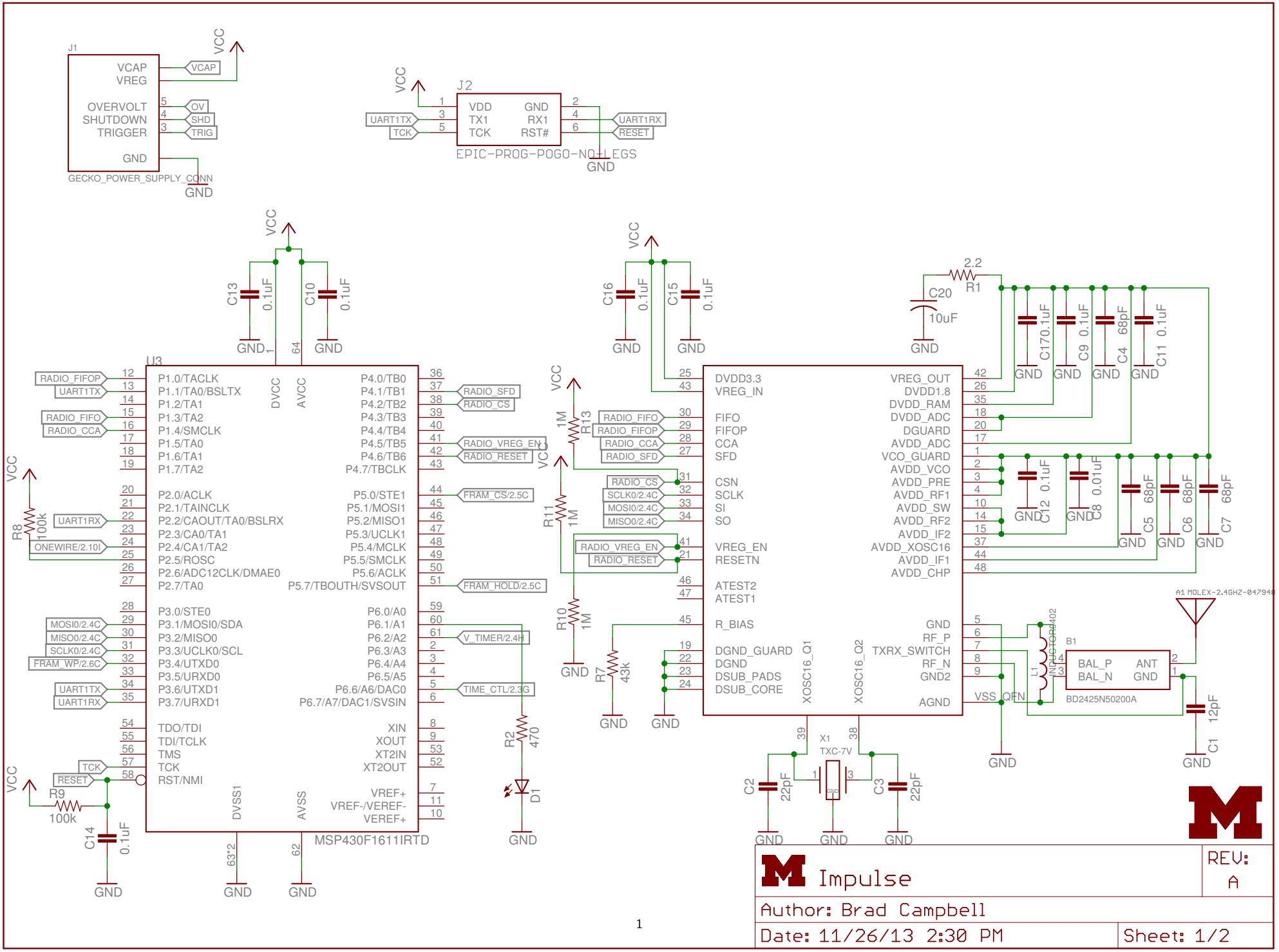
J1
VCAP
VREG
OVERVOLT
SHUTDOWN
TRIGGER
GND
VCAP
OV
SHD
TRIG
GECKO_POWER_SUPPLY_CONN
VCC
GND
J2
VDD
TX1
TCK
GND
RX1
RST#
UART1TX
TCK
UART1RX
RESET
EPIC-PROG-POGO-NO-LEGS
U3
P1.0/TACLK
P1.1/TA0/BSLTX
P1.2/TA1
P1.3/TA2
P1.4/SMCLK
P1.5/TA0
P1.6/TA1
P1.7/TA2
P2.0/ACLK
P2.1/TAINCLK
P2.2/CAOUT/TA0/BSLRX
P2.3/CA0/TA1
P2.4/CA1/TA2
P2.5/ROSC
P2.6/ADC12CLK/DMAE0
P2.7/TA0
P3.0/STE0
P3.1/MOSI0/SDA
P3.2/MISO0
P3.3/UCLK0/SCL
P3.4/UTXD0
P3.5/URXD0
P3.6/UTXD1
P3.7/URXD1
TDO/TDI
TDI/TCLK
TMS
TCK
RST/NMI
DVSS1
DVCC
AVCC
AVSS
P4.0/TB0
P4.1/TB1
P4.2/TB2
P4.3/TB3
P4.4/TB4
P4.5/TB5
P4.6/TB6
P4.7/TBCLK
P5.0/STE1
P5.1/MOSI1
P5.2/MISO1
P5.3/UCLK1
P5.4/MCLK
P5.5/SMCLK
P5.6/ACLK
P5.7/TBOUTH/SVSOUT
P6.0/A0
P6.1/A1
P6.2/A2
P6.3/A3
P6.4/A4
P6.5/A5
P6.6/A6/DAC0
P6.7/A7/DAC1/SVSIN
XIN
XOUT
XT2IN
XT2OUT
VREF+
VREF-/VEREF-
VEREF+
MSP430F1611IRTD
RADIO_FIFOP
UART1TX
RADIO_FIFO
RADIO_CCA
ONEWIRE/2.10I
FRAM_WP/2.6C
RADIO_SFD
RADIO_CS
RADIO_VREG_EN
RADIO_RESET
FRAM_CS/2.5C
FRAM_HOLD/2.5C
V_TIMER/2.4H
TIME_CTL/2.3G
R8
100k
R9
100k
R2
470
D1
C13
0.1uF
C10
0.1uF
C14
0.1uF
C16
0.1uF
C15
0.1uF
R13
1M
R11
1M
R10
1M
R7
43k
DVDD3.3
VREG_IN
FIFO
FIFOP
CCA
SFD
CSN
SCLK
SI
SO
VREG_EN
RESETN
ATEST2
ATEST1
R_BIAS
DGND_GUARD
DGND
DSUB_PADS
DSUB_CORE
XOSC16_Q1
XOSC16_Q2
VREG_OUT
DVDD1.8
DVDD_RAM
DVDD_ADC
DGUARD
AVDD_ADC
VCO_GUARD
AVDD_VCO
AVDD_PRE
AVDD_RF1
AVDD_SW
AVDD_RF2
AVDD_IF2
AVDD_XOSC16
AVDD_IF1
AVDD_CHP
GND
RF_P
TXRX_SWITCH
RF_N
GND2
AGND
VSS_QFN
2.2
R1
C20
10uF
C17
0.1uF
C9
0.1uF
C4
68pF
C11
0.1uF
C12
0.1uF
C8
0.01uF
C5
68pF
C6
68pF
C7
68pF
L1
INDUCTOR0402
B1
BAL_P
BAL_N
ANT
GND
BD2425N50200A
A1 MOLEX-2.4GHZ-047948
C1
12pF
X1
TXC-7V
C2
22pF
C3
22pF
Impulse
REV:
A
Author: Brad Campbell
Date: 11/26/13 2:30 PM
Sheet: 1/2

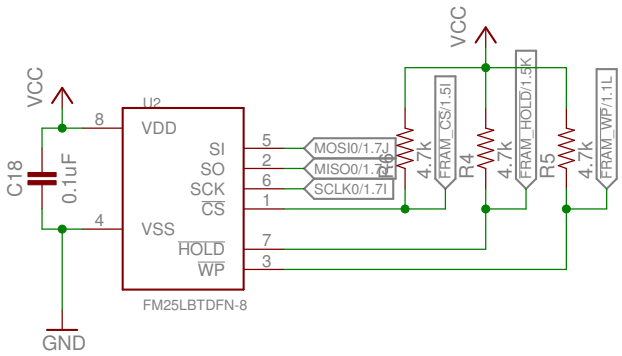

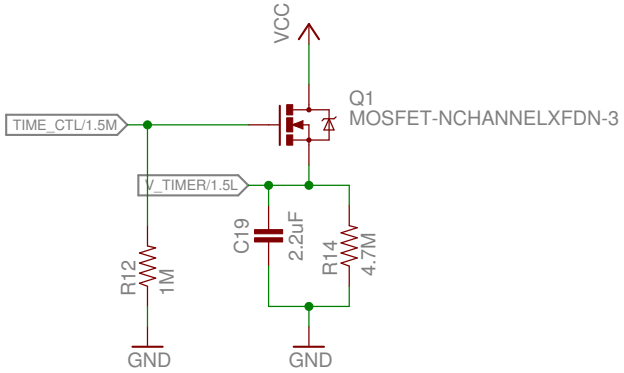

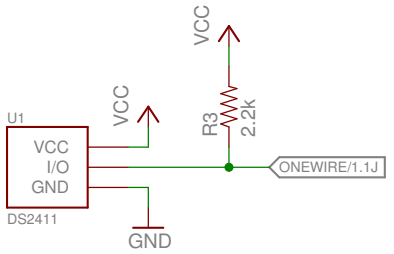

Impulse	REV: A
Author: Brad Campbell	
Date: 11/26/13 2:30 PM	Sheet: 2/2

Top and Bottom Layers

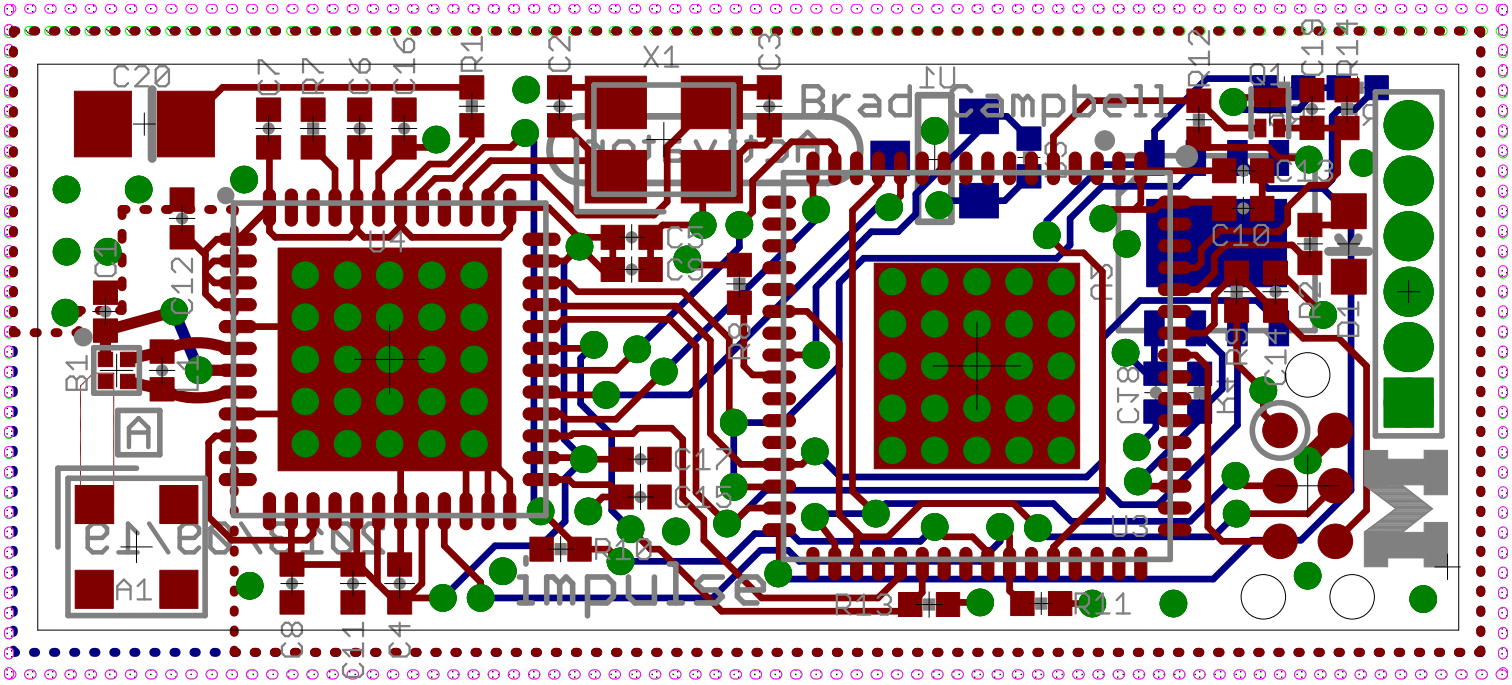

Top Layer

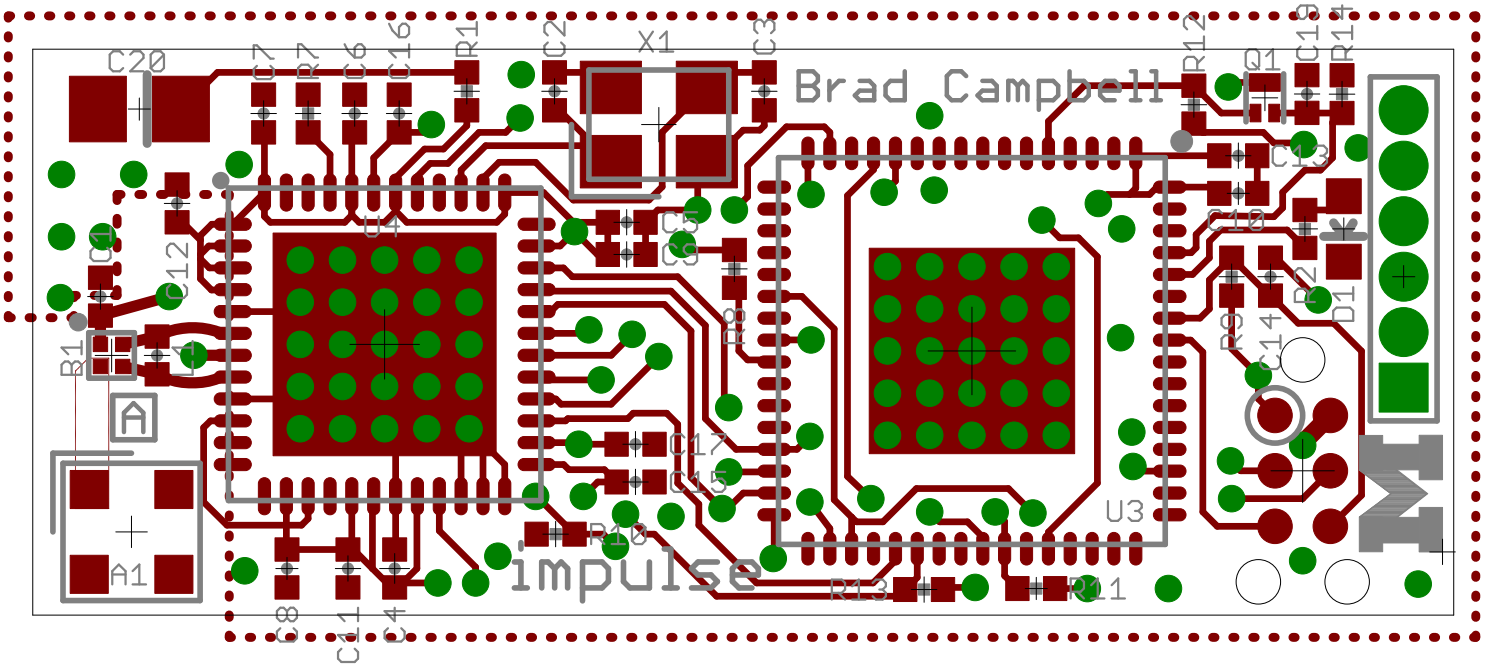

C20
C7
R7
C6
C16
R1
C2
X1
C3
Brad Campbell
R12
Q1
C19
R14
C13
C10
R2
D1
R9
C14
U4
C5
C9
R8
C12
C1
B1
L1
A
A1
C17
C15
R10
impulse
U3
R13
R11
C8
C11
C4

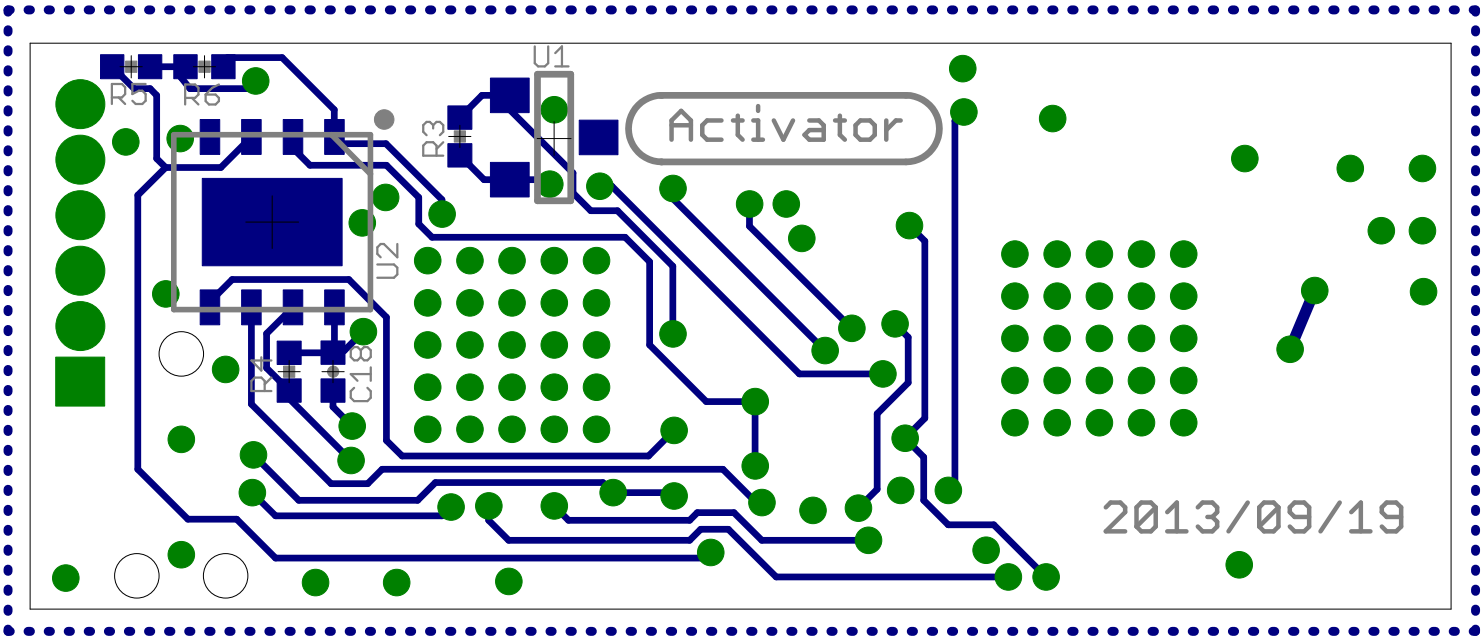
U1
R5
R6
R3
Activator
U2
R4
C18
2013/09/19

Top Copper Layer

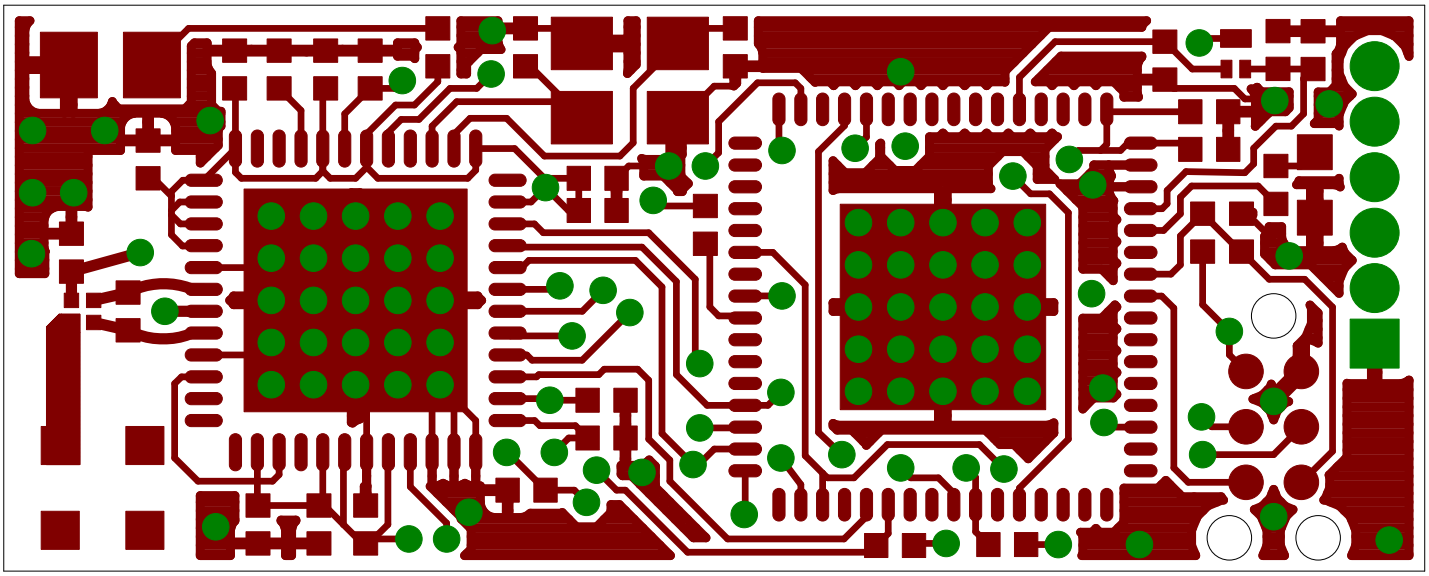

Layer 2 Copper

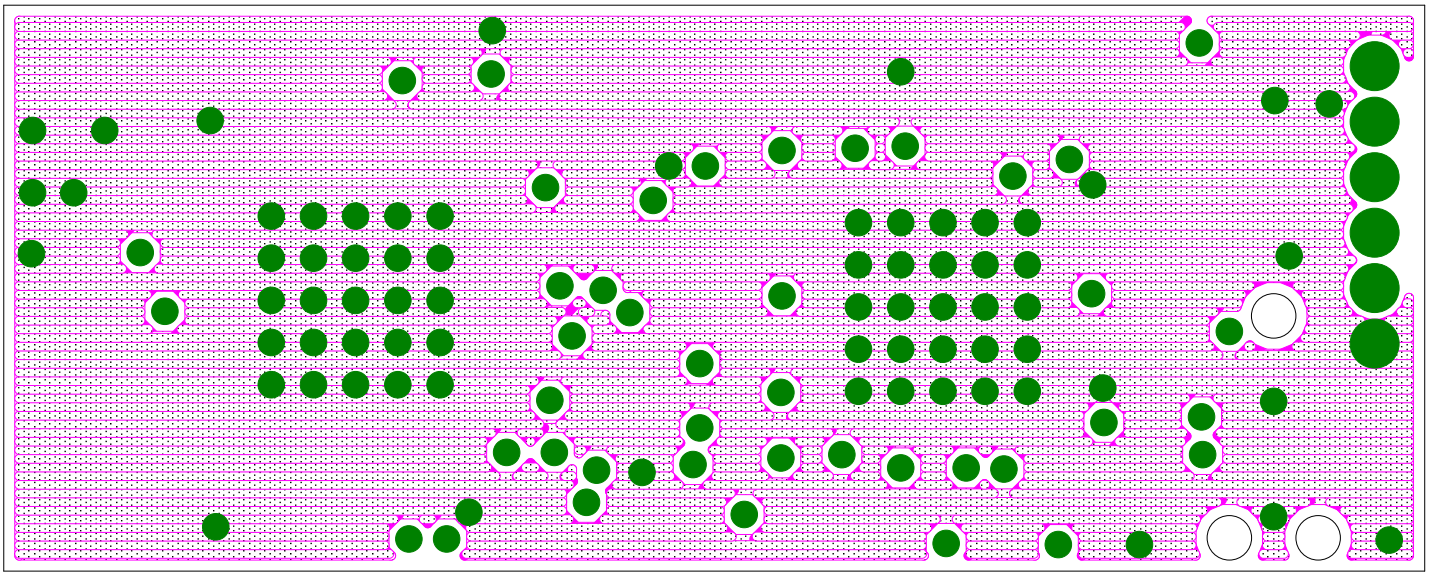

Layer 3 Copper

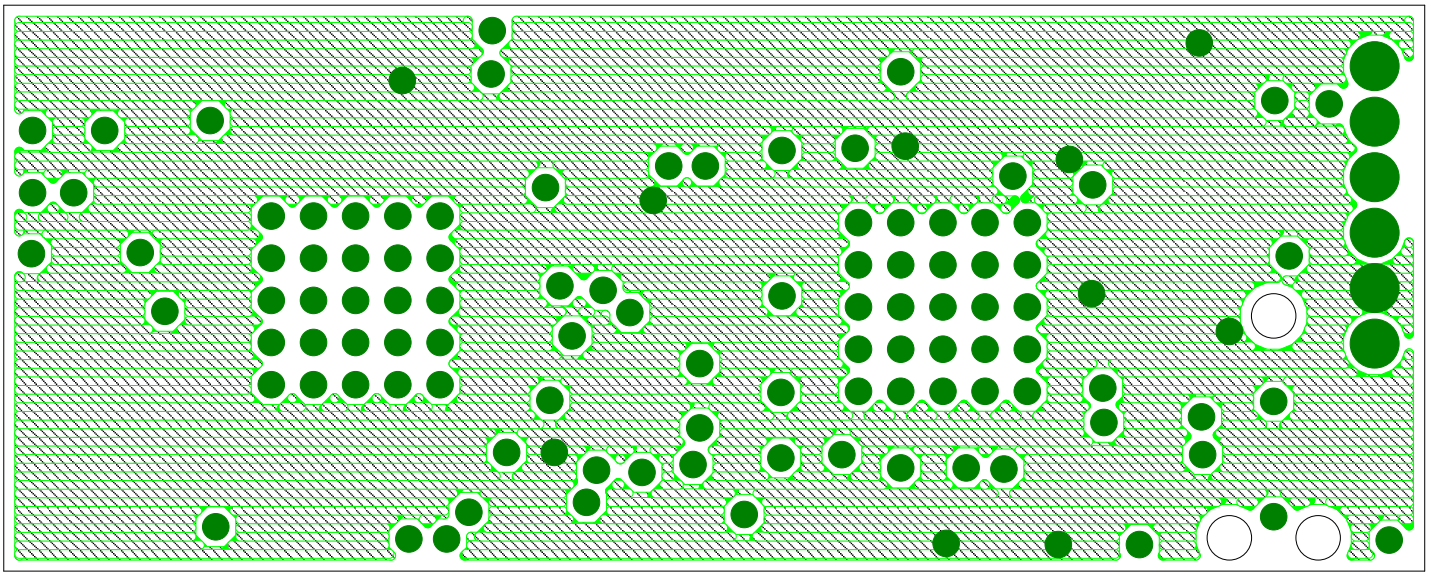

Bottom Copper Layer

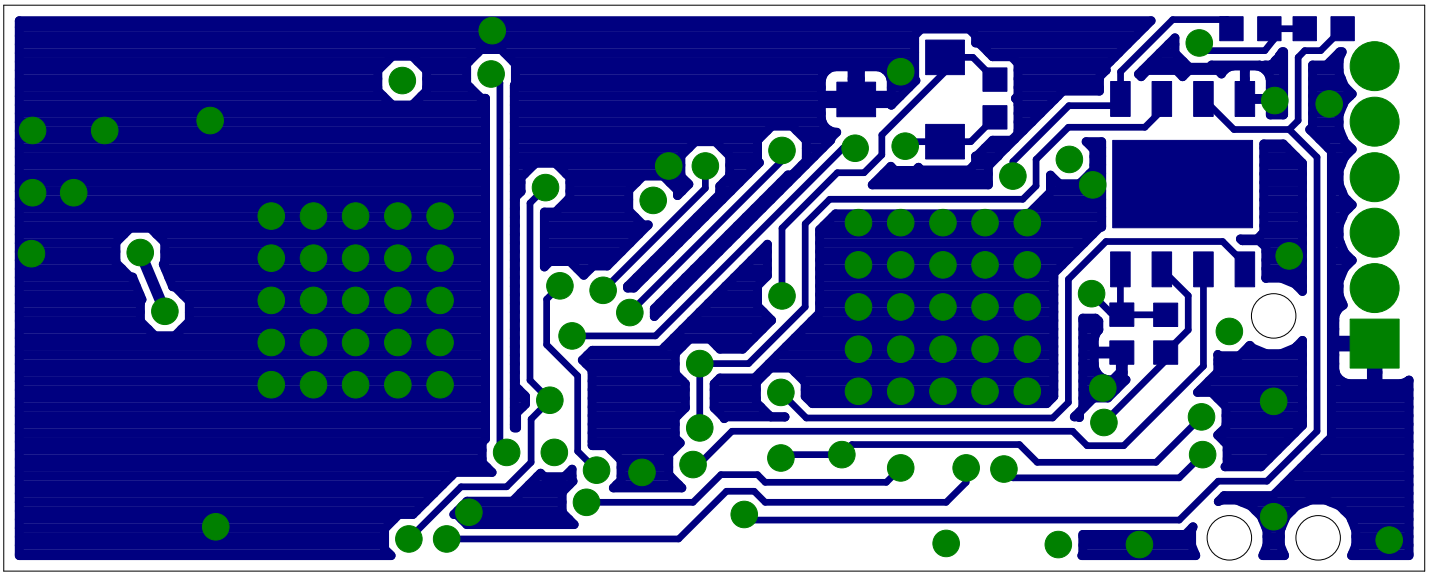

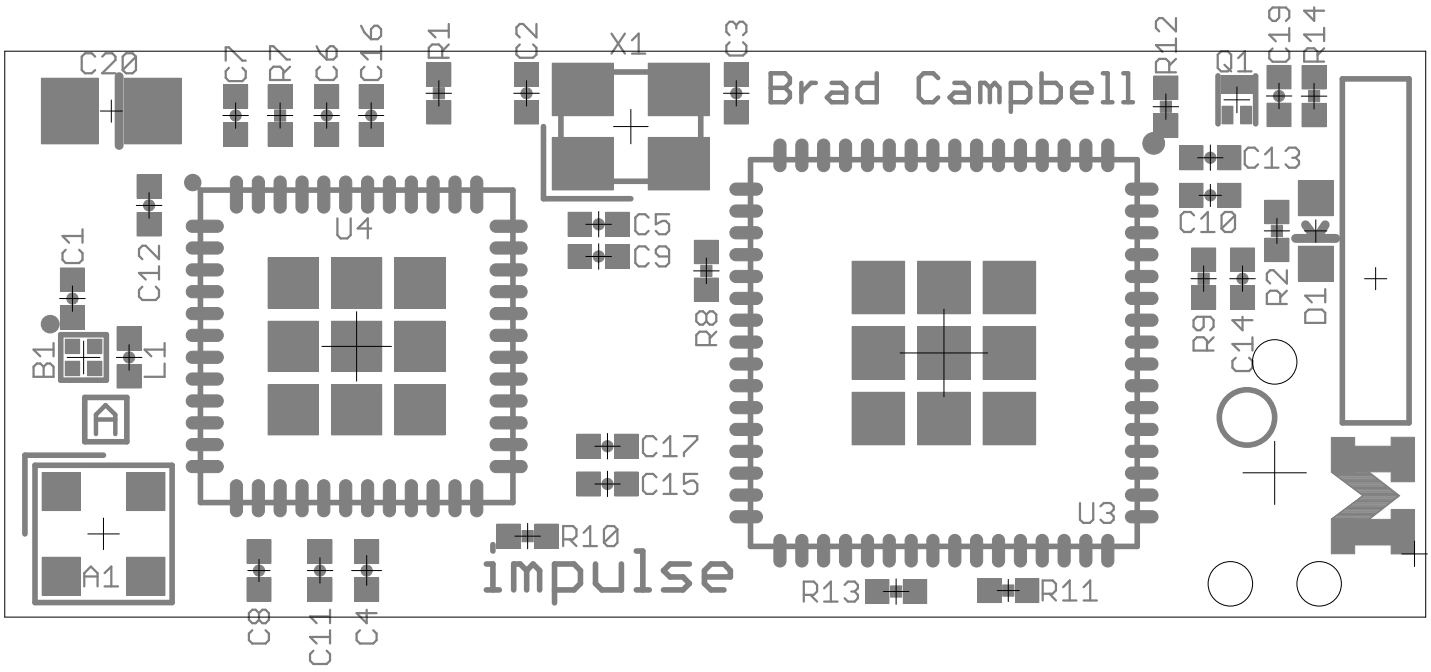
C20
C7
R7
C6
C16
R1
C2
X1
C3
R12
Q1
C19
R14
Brad Campbell
C13
C10
C1
C12
U4
C5
C9
R8
R2
D1
R9
C14
B1
L1
C17
C15
U3
R10
impulse
A1
R13
R11
C8
C11
C4

Bottom Paste Layer with Silkscreen

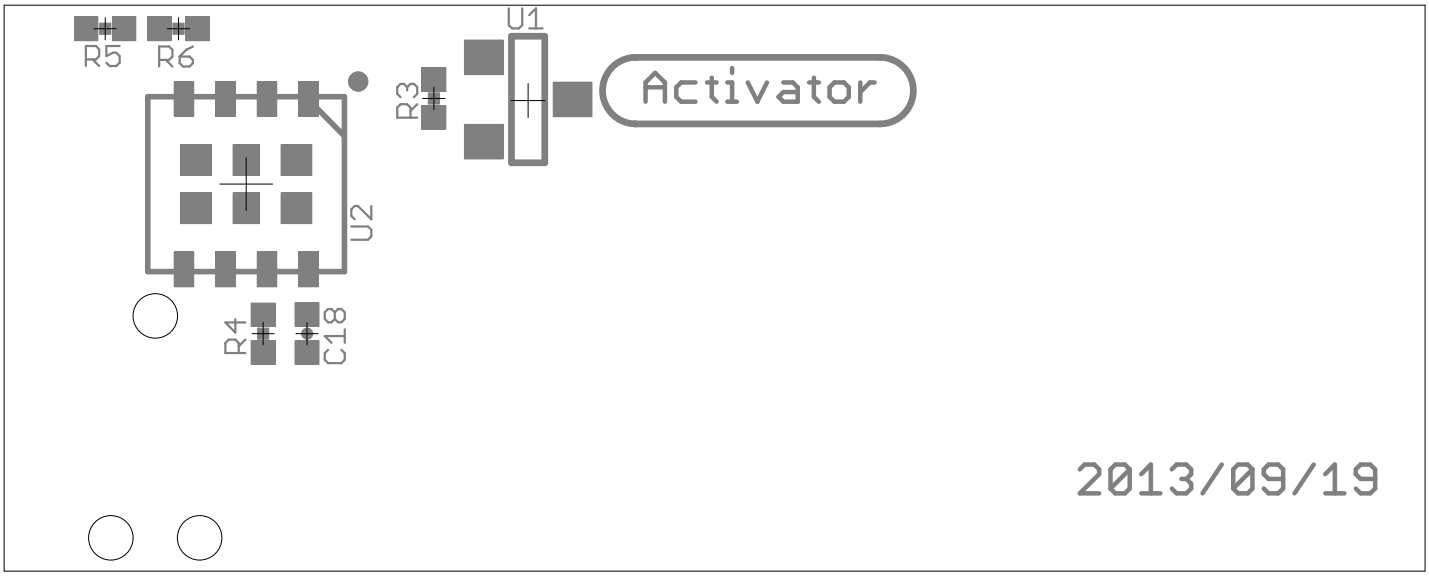

Top and Bottom Layers 1:1 Scale

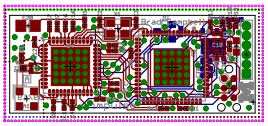

Top Layer 1:1 Scale

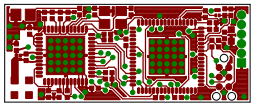

Layer 2 Copper 1:1 Scale

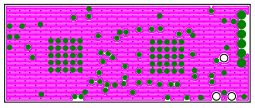

Layer 3 Copper 1:1 Scale

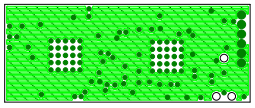

Bottom Copper Layer 1:1 Scale

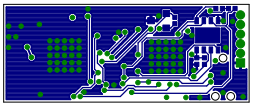

Qty	Value	Device	Package	Parts	Description	DIGIKEY	MOUSER	TAG-CONNECT
1	MOLEX-2.4GHZ-047948	MOLEX-2.4GHZ-047948	MOLEX-47948-ANTENNA	A1		WM4893CT-ND		
1	BD2425N50200A	BD2425N50200A	BD2425N50200A	B1		1173-1063-1-ND		
1	12pF	CAPACITOR	0402_CAP	C1	0402 Capacitor	712-1257-1-ND		
2	22pF	CAPACITOR	0402_CAP	C2, C3	0402 Capacitor	445-1239-1-ND		
4	68pF	CAPACITOR	0402_CAP	C4, C5, C6, C7	0402 Capacitor	445-1245-1-ND		
1	0.01uF	CAPACITOR	0402_CAP	C8	0402 Capacitor	445-1260-1-ND		
10	0.1uF	CAPACITOR	0402_CAP	C9, C10, C11, C12, C13, C14, C15, C16, C17, C	0402 Capacitor	445-1265-1-ND		
1	2.2uF	CAPACITOR	0402_CAP	C19	0402 Capacitor	445-3882-1-ND		
1	10uF	C-USC0805	C0805	C20	CAPACITOR, Americar	478-2561-1-ND		
1		LED-0603	LED-0603	D1	LED			
1	GECKO_POWER_SUPPLY_CON	GECKO_POWER_SUPPLY_CON	HEADER1X6/0.05IN	J1	Header on the gecko power supply board.			
1	EPIC-PROG-POGO-NO-LEGS	EPIC-PROG-POGO-NO-LEGS	TC2030-IDC-NL	J2	Epic programmer based on the Tag Connect pogo pin cable.			TC2030-IDC-NL
1	INDUCTOR0402	INDUCTOR0402	0402_CAP	L1		712-1419-1-ND		
1	MOSFET-NCHANNELXFDN-3	MOSFET-NCHANNELXFDN-3	XFDFN-3	Q1	Generic NMOS footprin	DMN2400UFB4-7DICT-ND		
1	2.2	RESISTOR	0402_RES	R1	Resistor	RHM2.2CECT-ND		
1	470	RESISTOR	0402_RES	R2	Resistor			
1	2.2k	RESISTOR	0402_RES	R3	Resistor	RHM2.2KCECT-ND		
3	4.7k	RESISTOR	0402_RES	R4, R5, R6	Resistor	RHM4.7KCECT-ND		
1	43k	RESISTOR	0402_RES	R7	Resistor	RHM43KCECT-ND		
2	100k	RESISTOR	0402_RES	R8, R9	Resistor	RHM100KCECT-ND		
4	1M	RESISTOR	0402_RES	R10, R11, R12, R13	Resistor	RHM1.0MCECT-ND		
1	4.7M	RESISTOR	0402_RES	R14	Resistor	541-4.7MJCT-ND		
1	DS2411	DS2411	SOT-23	U1	Maxim DS2411	DS2411R+CT-ND		
1	FM25LBTDFN-8	FM25LBTDFN-8	TDFN-8	U2	IC FRAM 4KBIT 10MHz	FM25L04B-DGRA-ND	877-FM25L04B-DG	
1	MSP430F1611IRTD	MSP430F1611IRTD	S-PVQFN-N64	U3		296-18102-1-ND		
1	CC2420RGZ	CC2420RGZ	S-PVQFN-N48	U4	2.4 GHz IEEE 802.15.4	296-19585-1-ND		
1	TXC-7V	TXC-7V	TXC-7V	X1		887-1799-1-ND		