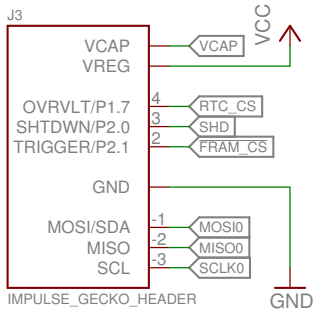

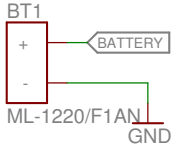

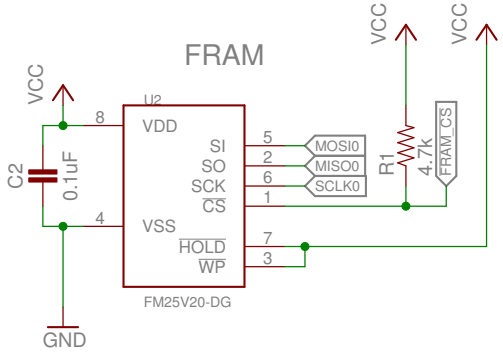

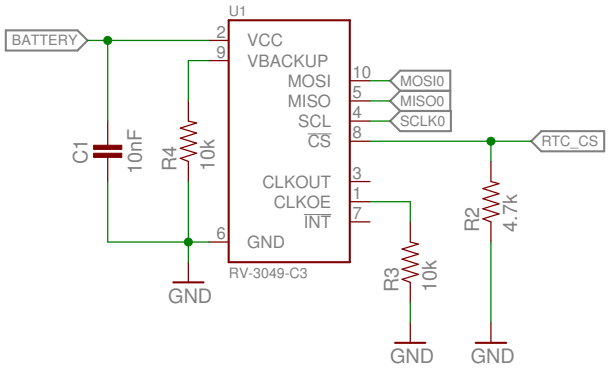

BigBen	REV: A
Author: Brad Campbell	
Date: 3/25/14 10:07 PM	Sheet: 1/1

Top and Bottom Layers

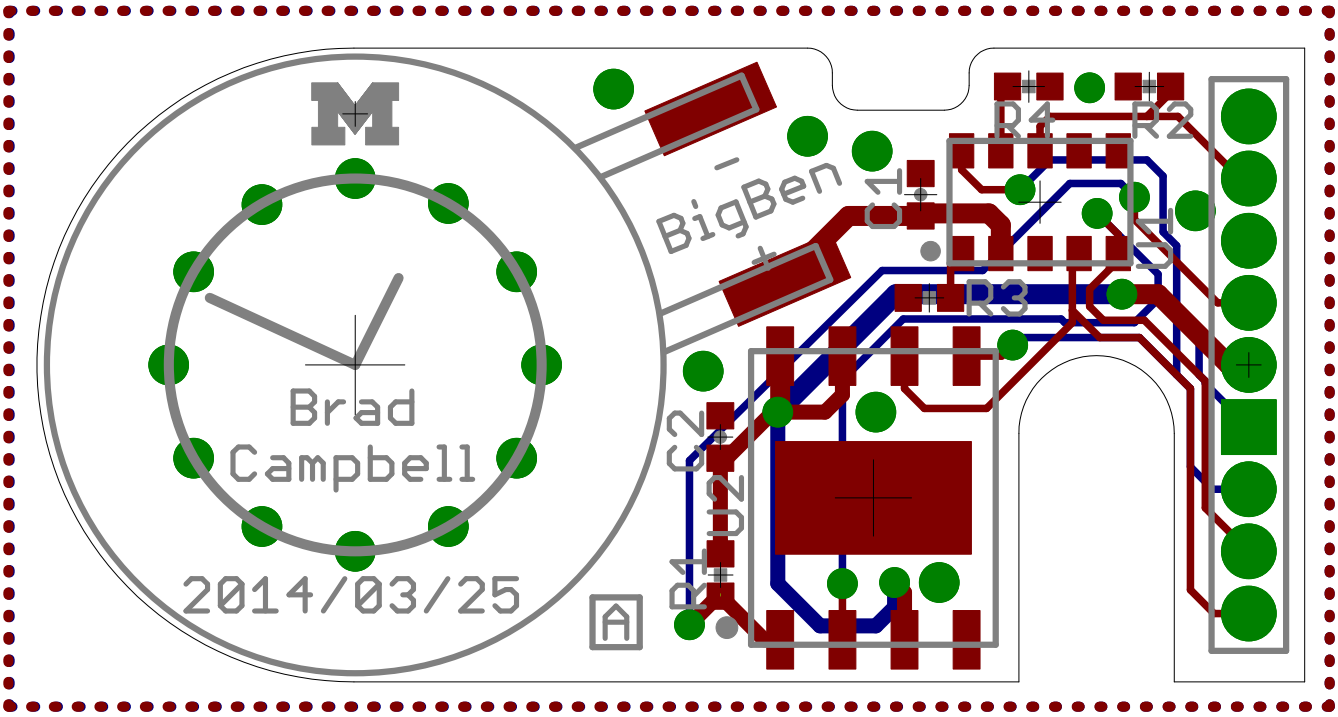

Top Layer

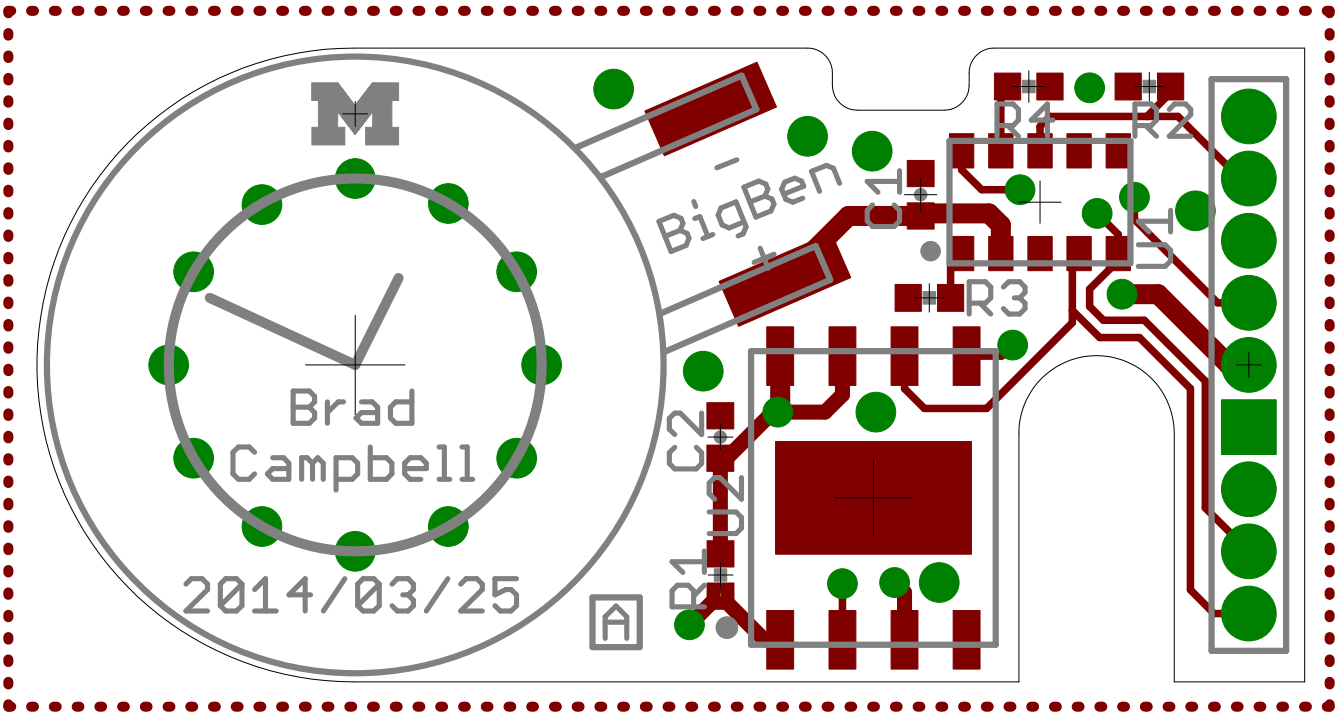

Bottom Layer

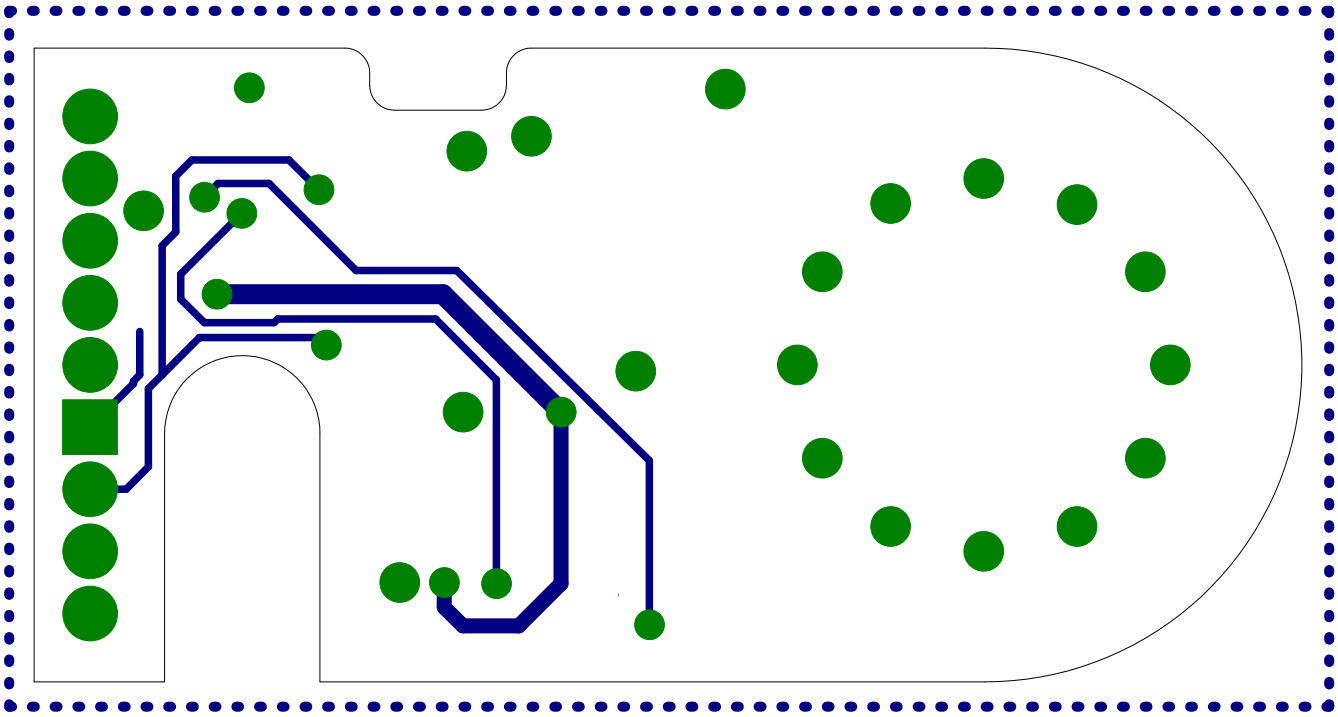

Top Copper Layer

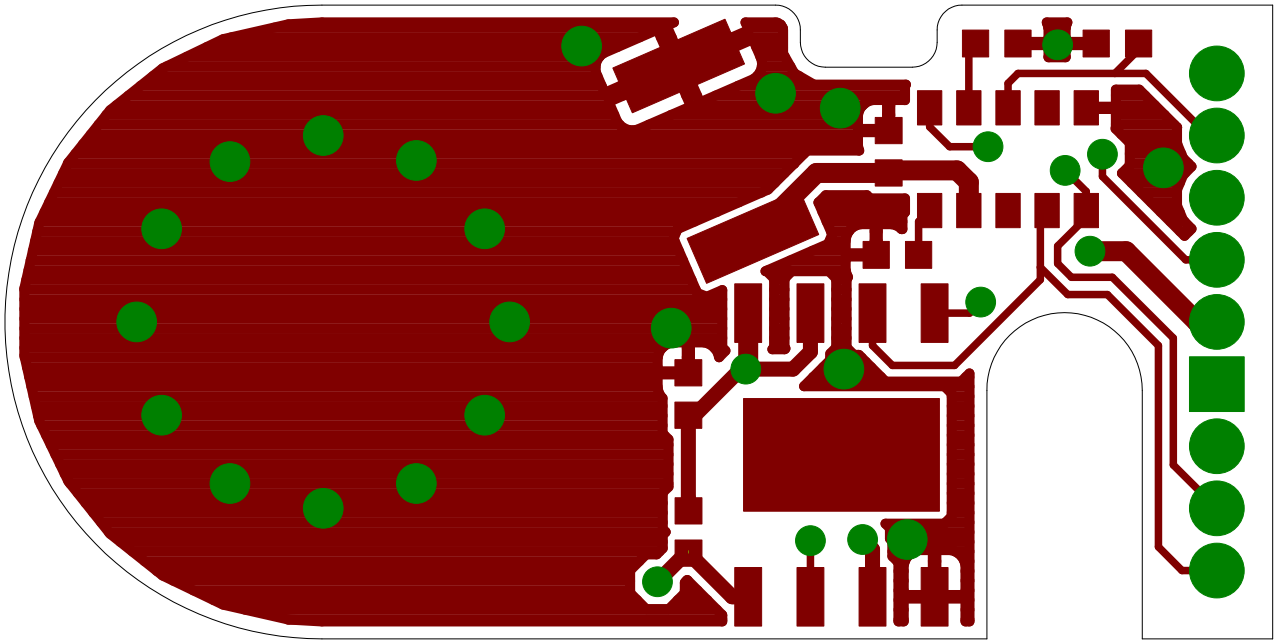

Bottom Copper Layer

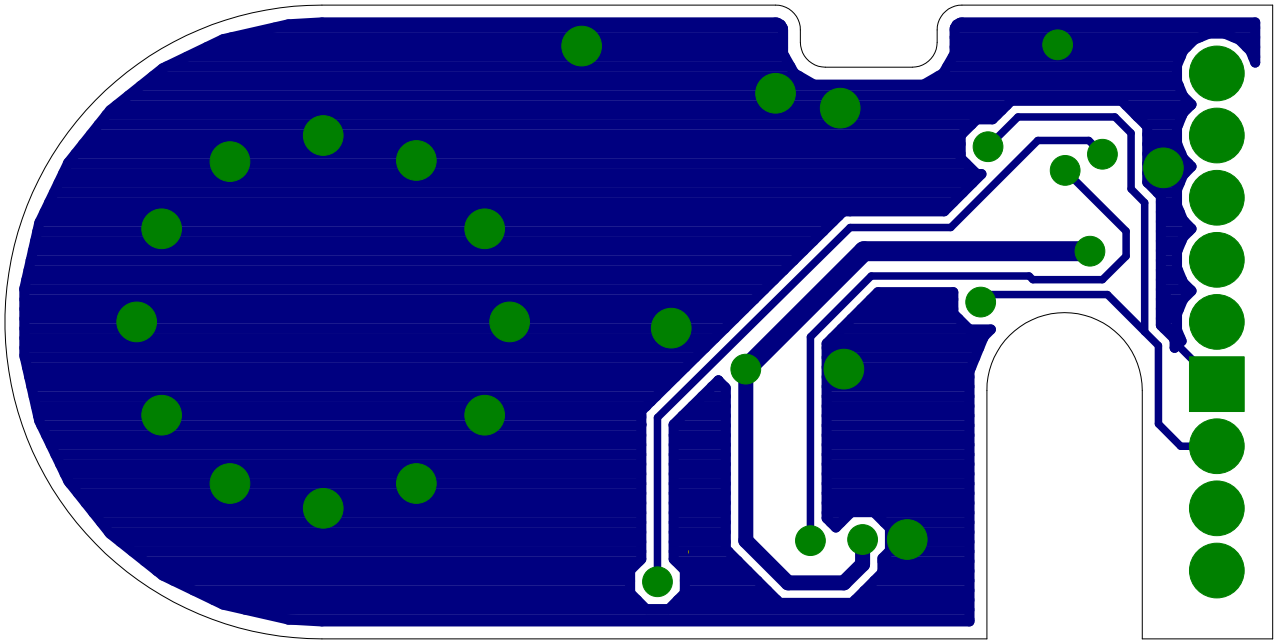

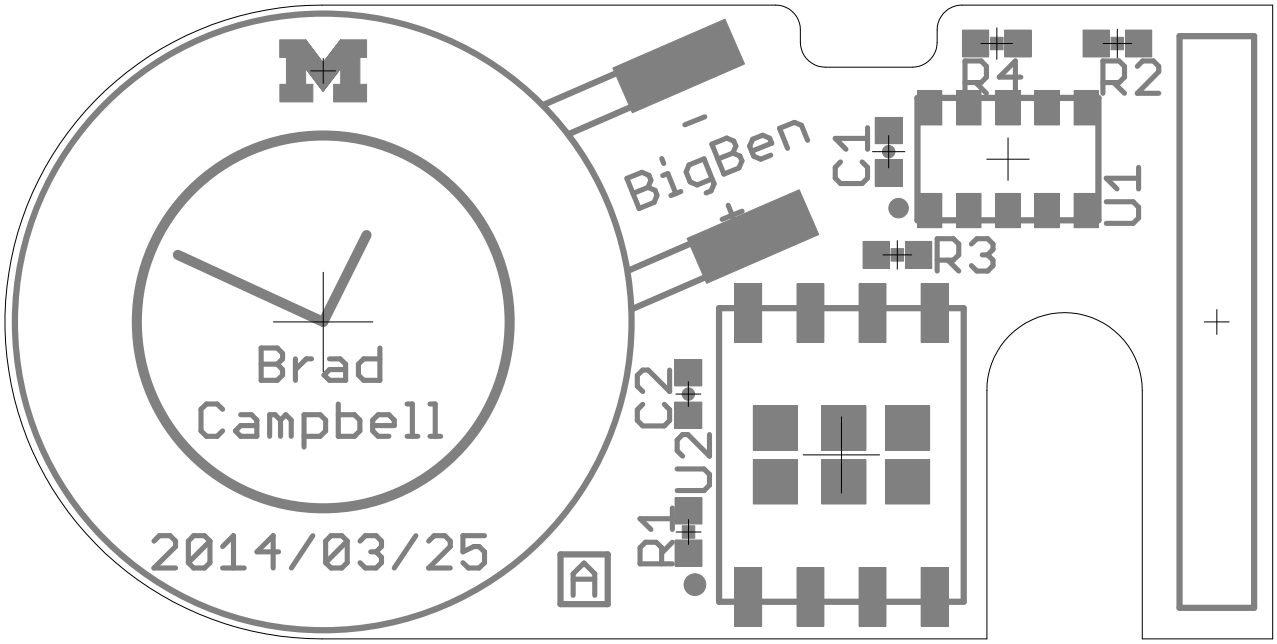
BigBen
Brad
Campbell
2014/03/25
R4
R2
C1
U1
R3
C2
U2
R1

Bottom Paste Layer with Silkscreen

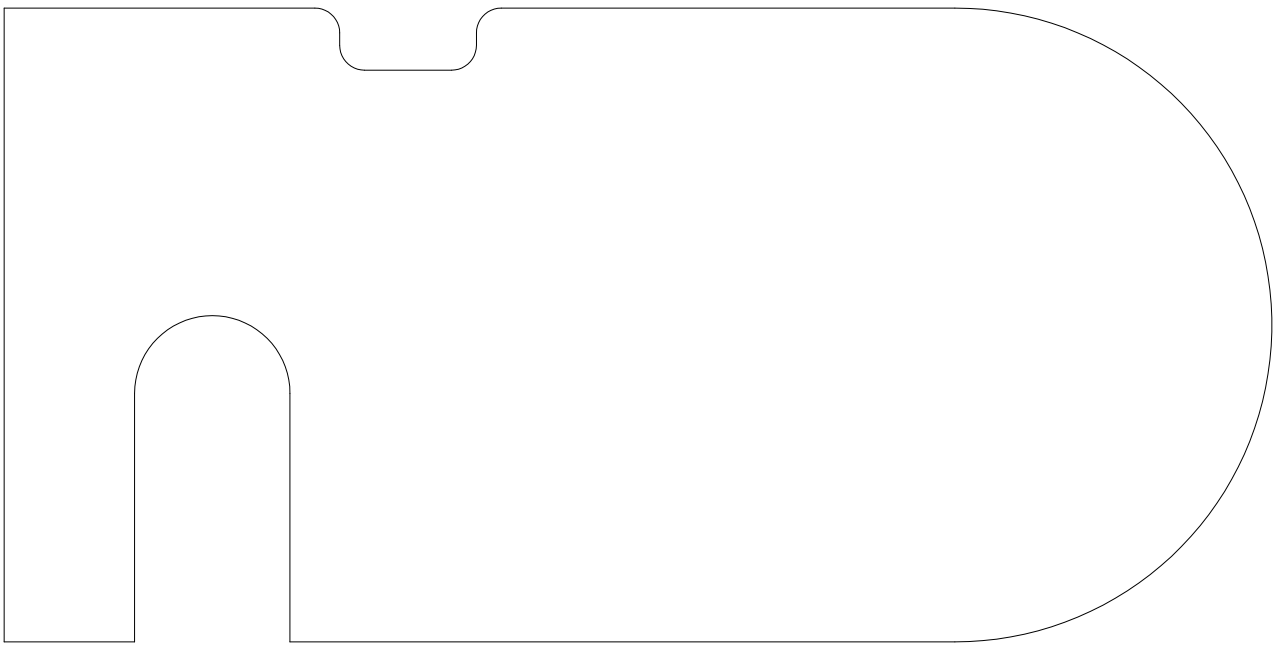

Top and Bottom Layers 1:1 Scale

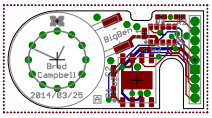

Top Layer 1:1 Scale

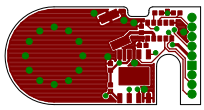

Bottom Copper Layer 1:1 Scale

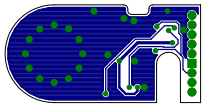

Sheet1

Qty	Value	Device	Package	Parts
1	ML-1220/F1AN	ML-1220/F1AN	ML-1220/F1BN	BT1
1	10nF	CAPACITOR	0402_CAP	C1
1	0.1uF	CAPACITOR	0402_CAP	C2
4	4.7k	RESISTOR	0402_RES	R1, R2
2	10k	RESISTOR	0402_RES	R3, R4
1	RV-3049-C3	RV-3049-C3	MICRO-CRYSTAL-C3	U1
1	FM25LBTDFN-8	FM25LBTDFN-8	TDFN-8	U2

Description	DIGIKEY	MOUSER
BATTERY LITH 3V RECHARGE PC PINS	P663-ND	658-ML-1220/F1BN
0402 Capacitor	445-1260-1-ND	
0402 Capacitor	445-1265-1-ND	
Resistor	RHM4.7KCECT-ND	
Resistor	RHM10KCECT-ND	
The RV-3049-C3 is an ultra miniature Real-Time-Clock Module		
IC FRAM 4KBIT 10MHZ 8SOIC		877-FM25V20-DG

NEWARK

90R7604
90R7585

RV-3049-C3