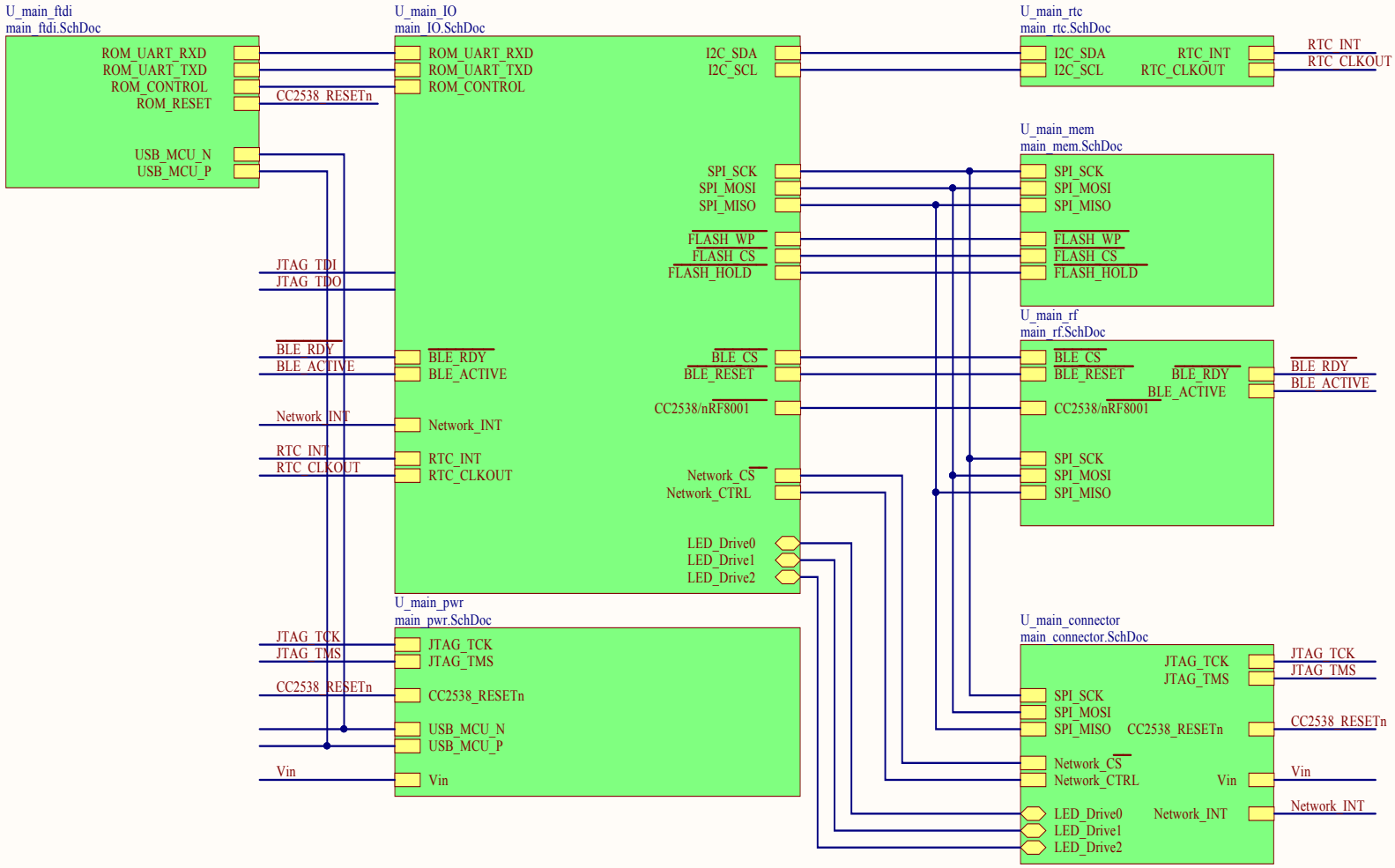

Title	***SDL - Main***	
Author: Ye-Sheng Kuo	Revision: 1	University of Michigan
Date: 9/26/2014	Sheet 1 of 8	
File: main_top.SchDoc		

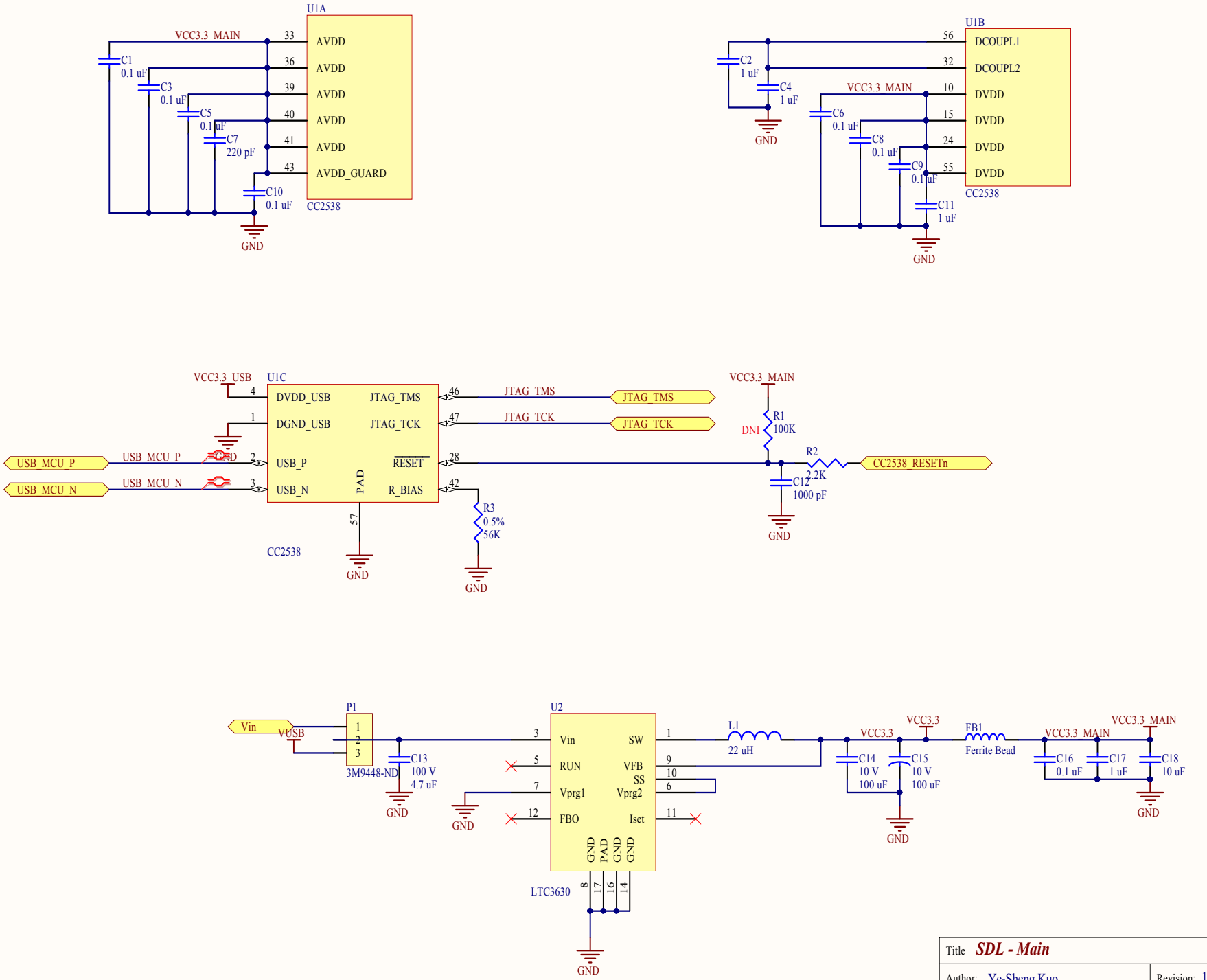

Title	*SDL - Main*
Author: Ye-Sheng Kuo	Revision: 1
Date: 9/26/2014	Sheet 2 of 8
File: main_pwr.SchDoc	

University of Michigan

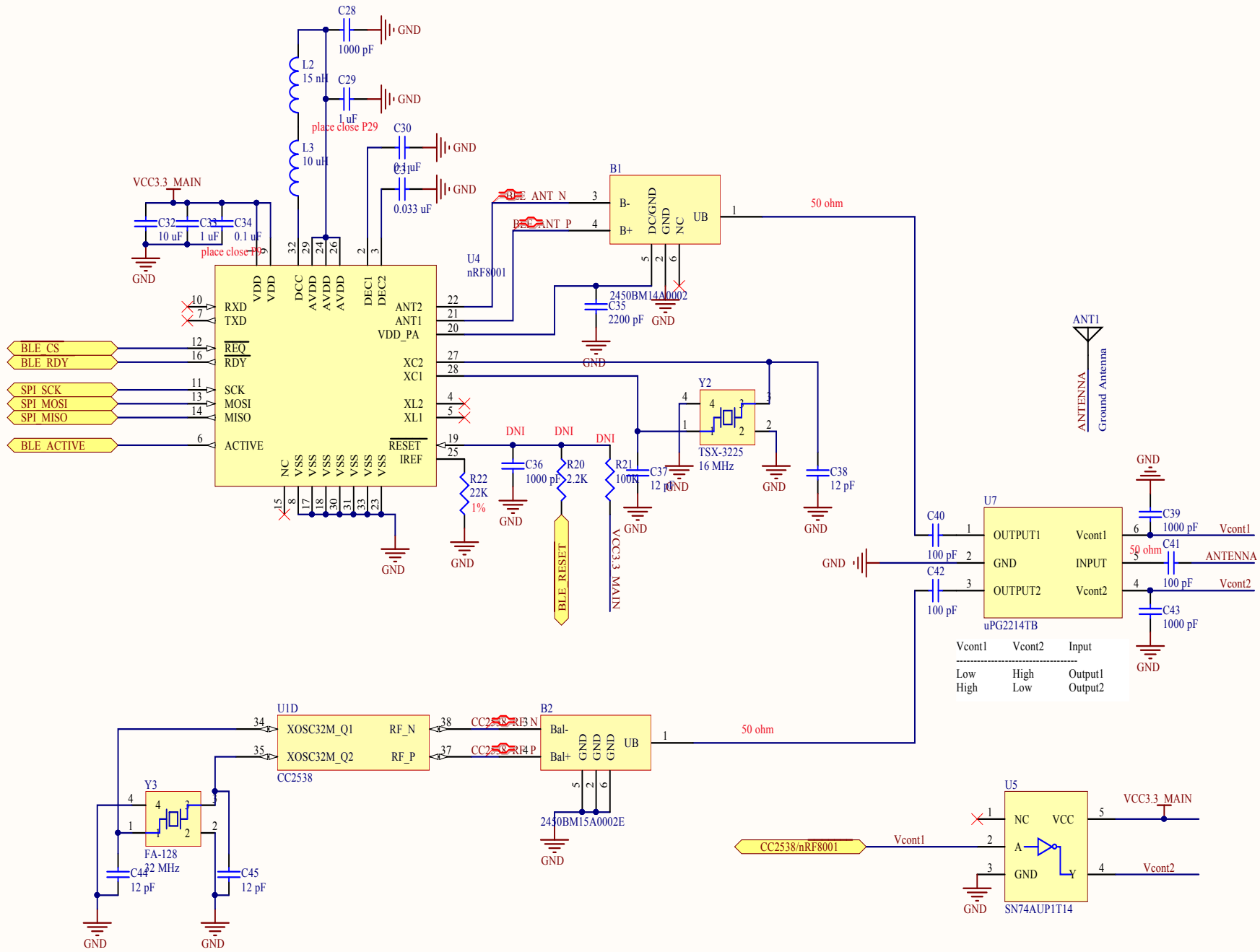

Title	*SDL - Main*
Author: Ye-Sheng Kuo	Revision: 1
Date: 9/26/2014	Sheet 3 of 8
File: main_rf.SchDoc	

University of Michigan

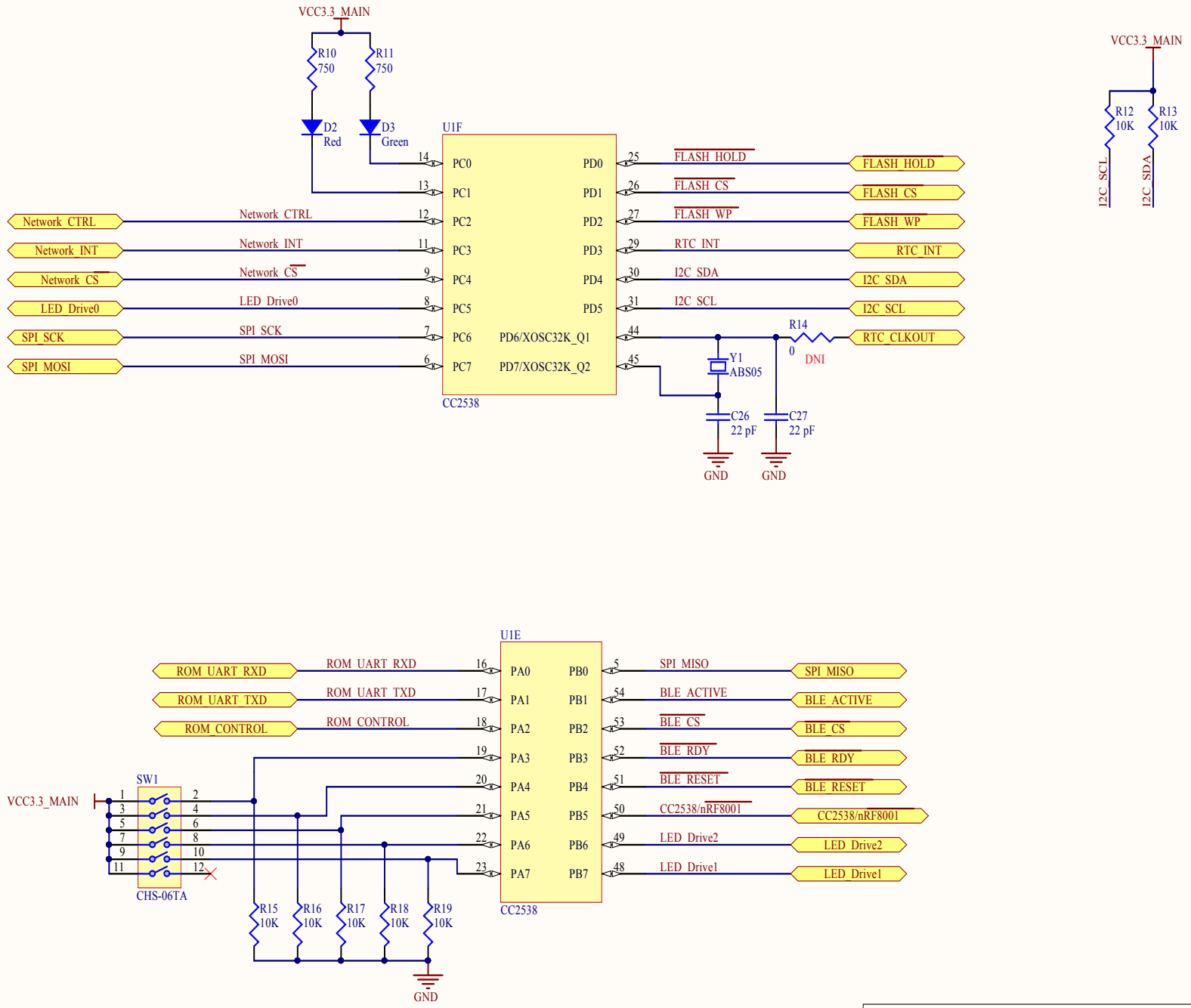

Title	*SDL - Main*
Author: Ye-Sheng Kuo	Revision: 1
Date: 9/26/2014	Sheet 4 of 8
File: main_IO.SchDoc	

University of Michigan

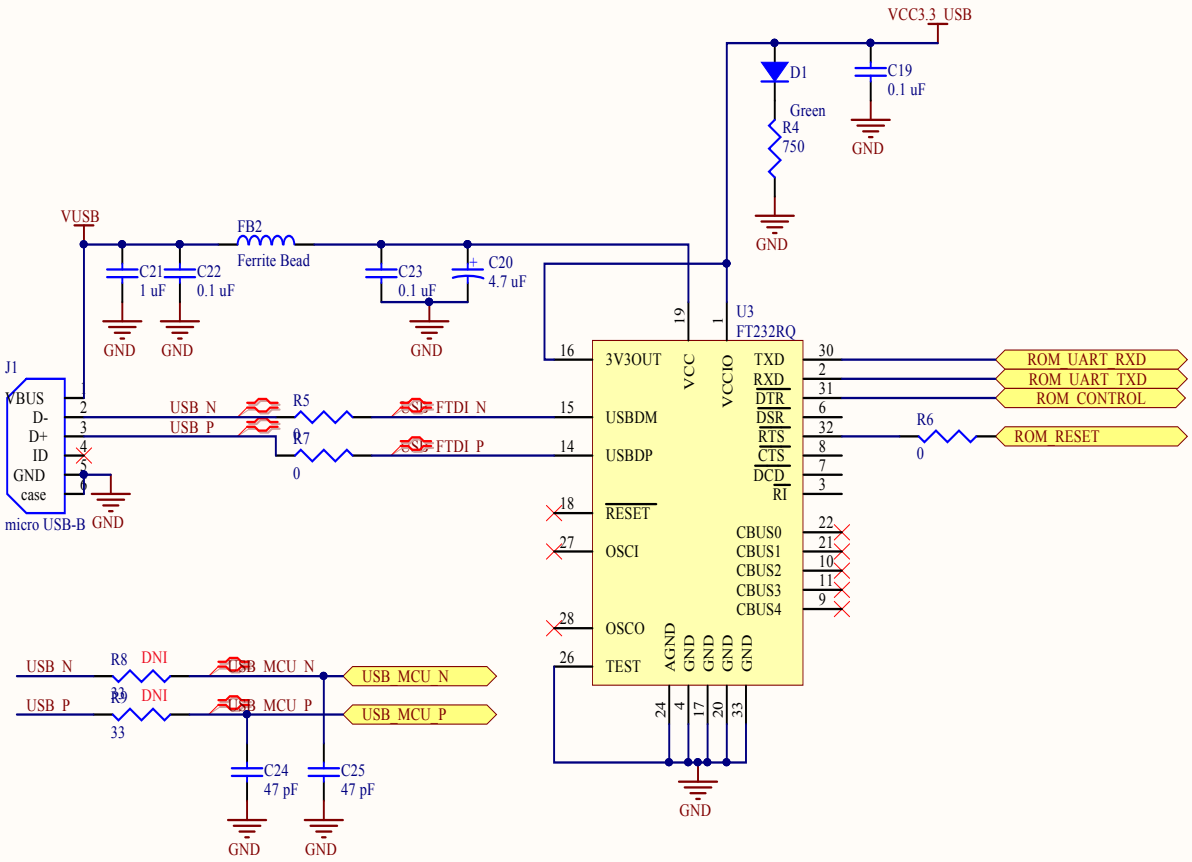

Title	*SDL - Main*	
Author: Ye-Sheng Kuo	Revision: 1	University of Michigan
Date: 9/26/2014	Sheet 5 of 8	
File: main_ftdi.SchDoc		

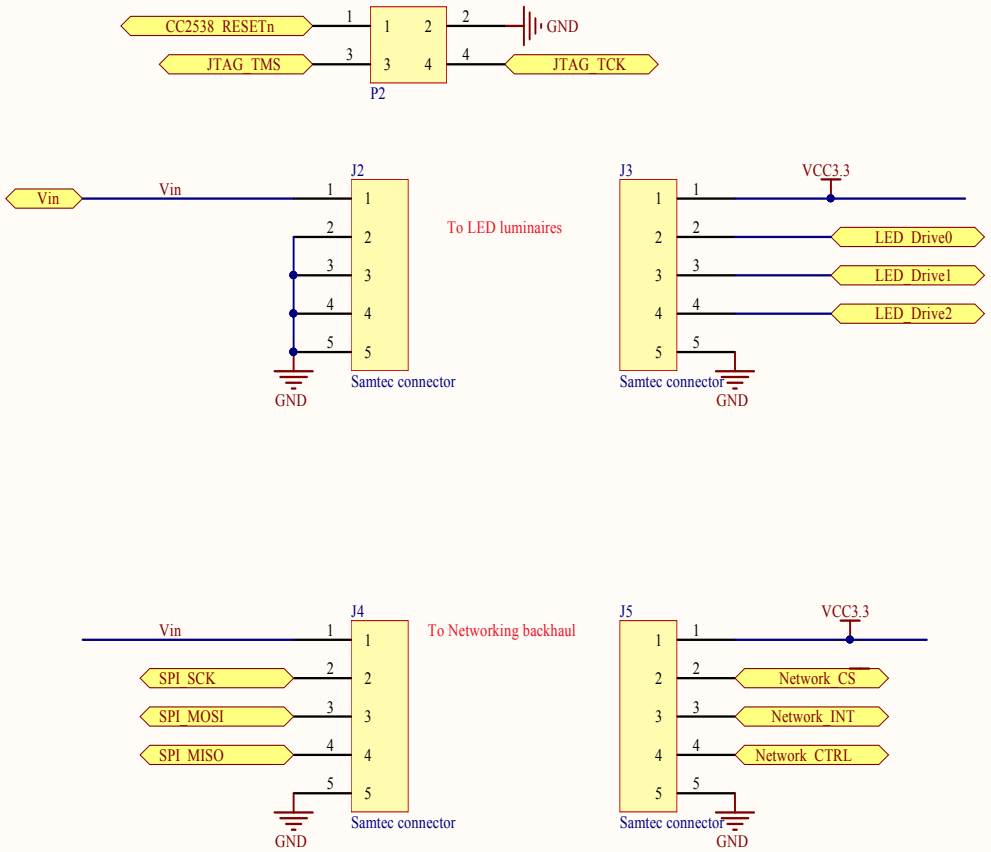

Title	*SDL - Main*	
Author: Ye-Sheng Kuo	Revision: 1	University of Michigan
Date: 9/26/2014	Sheet 6 of 8	
File: main_connector.SchDoc		

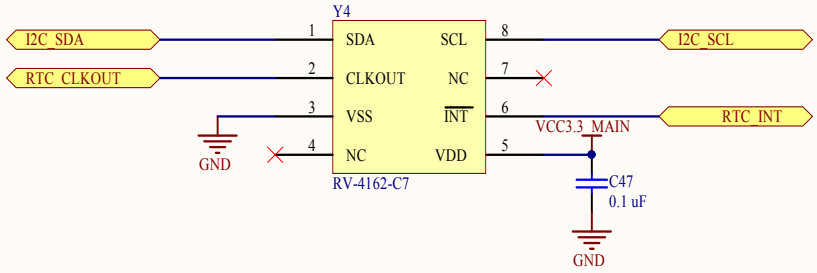

Title	*SDL - Main*	
Author: Ye-Sheng Kuo	Revision: 1	University of Michigan
Date: 9/26/2014	Sheet 7 of 8	
File: main_rtc.SchDoc		

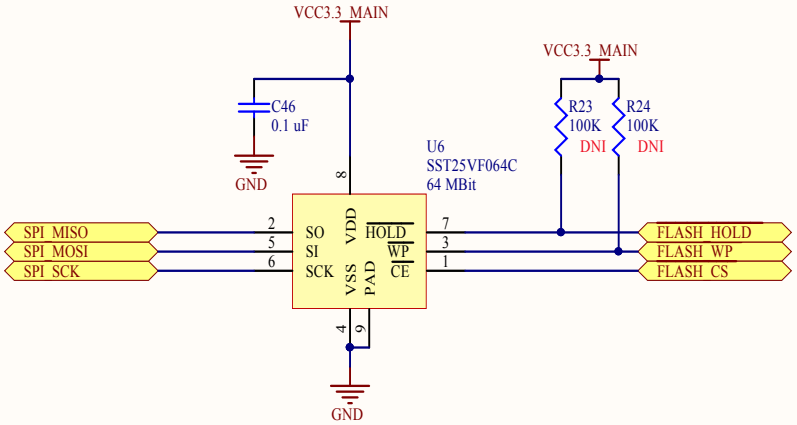

Title	*SDL - Main*	
Author: Ye-Sheng Kuo	Revision: 1	University of Michigan
Date: 9/26/2014	Sheet 8 of 8	
File: main_mem.SchDoc		