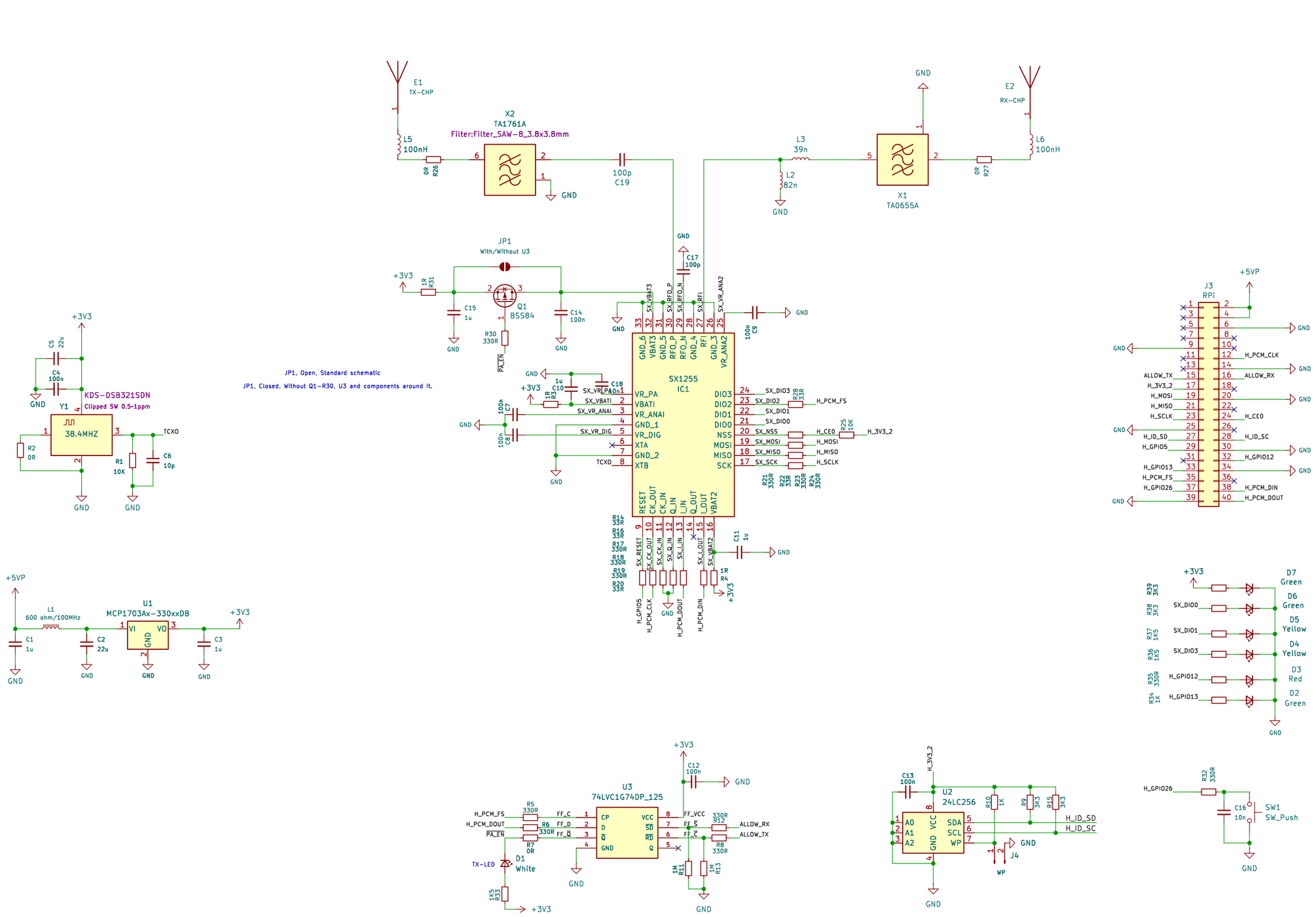


Modified SXceiver

**Z32IT**

Sheet: /

File: SX1255-SXCEIVER-HAT_microspot.kicad_sch

***Title: SX1255 RPi 4-5 HAT microspot***

| | | |
|---|---|---|
| Size: A3 | Date: 2026-03-07 | **Rev: V1.5** |
| KiCad E.D.A. 9.0.7 | | Id: 1/1 |