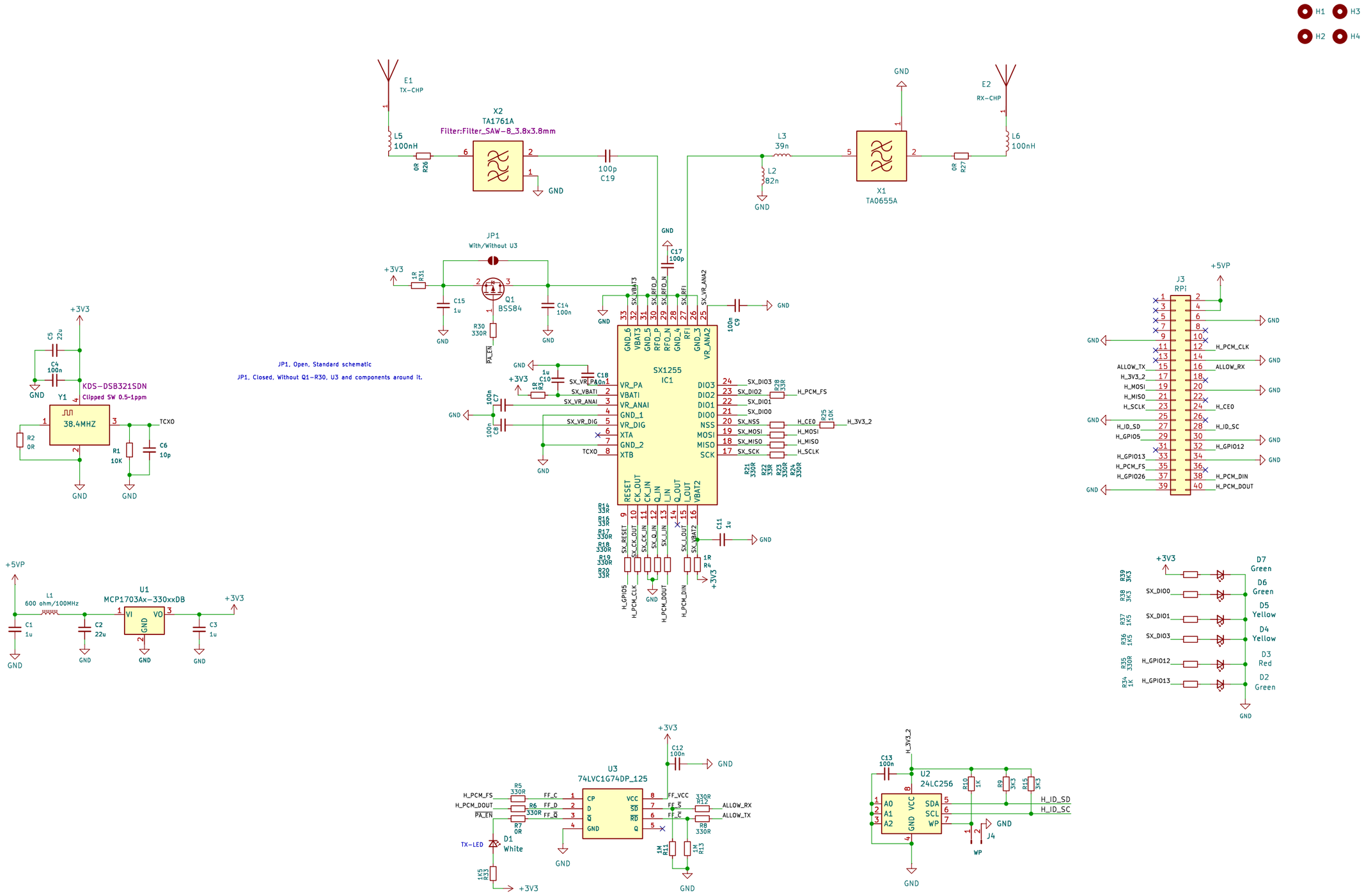

Modified SXceiver

Z32IT

Sheet: /

File: HAT_MicroSpot.kicad_sch

Title: HAT MicroSpot

Size: A3	Date: 2026-03-16	**Rev: V1.5 Final**
KiCad E.D.A. 9.0.7		Id: 1/1