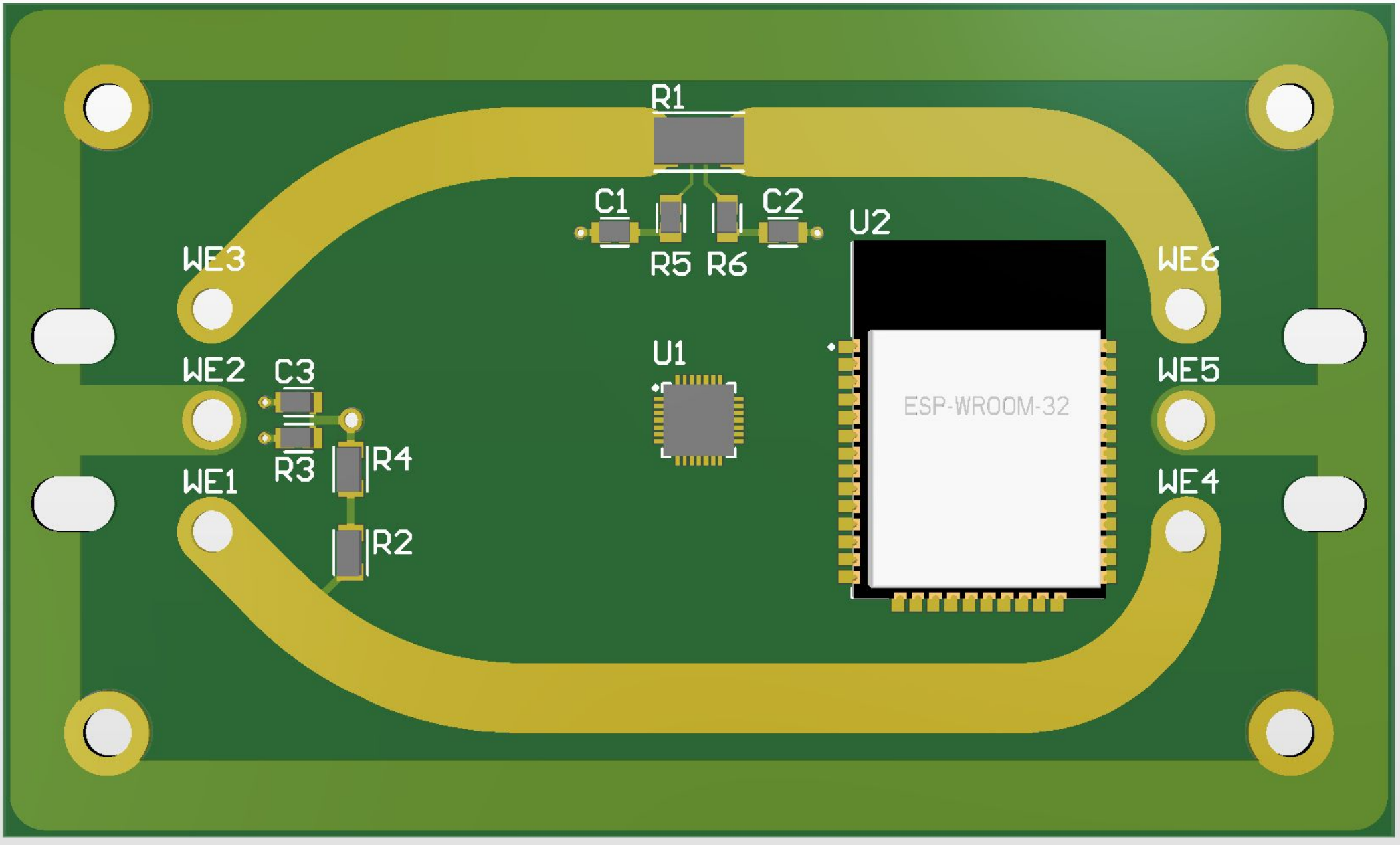
R1
C1
C2
U2
R5
R6
WE3
WE6
U1
WE2
C3
WE5
ESP-WROOM-32
R3
R4
WE1
WE4
R2

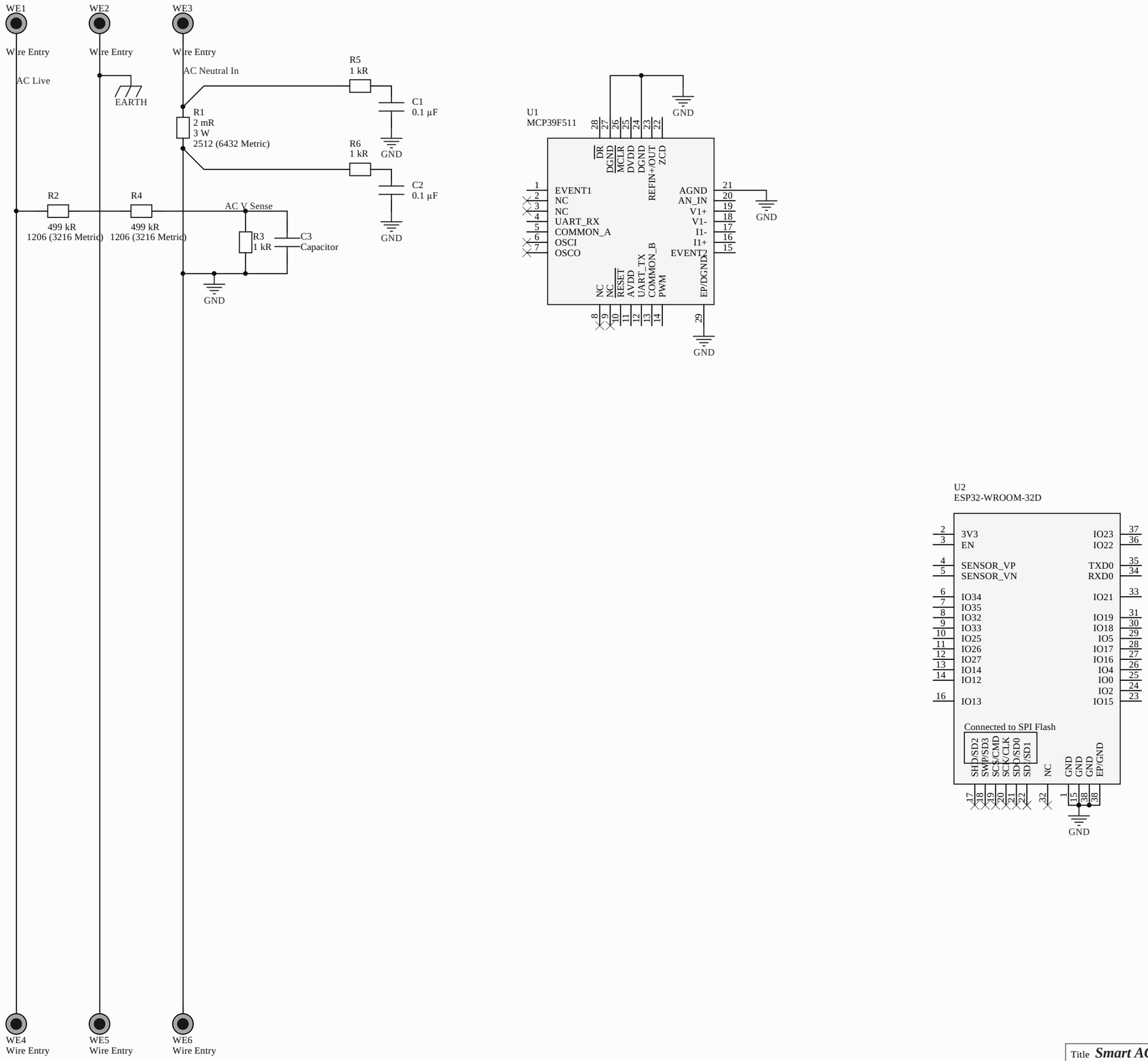

Title	*Smart AC Monitor*		
Size: A3	Number:	Revision: 0	
Date: 6/01/2020	Time: 3:20:24 PM	Sheet 1 of 1	
File: F:\Users\Lachlan500\Documents\Smart-AC-Monitor\Altium Project\Smart_AC_Monitor.SchDoc			

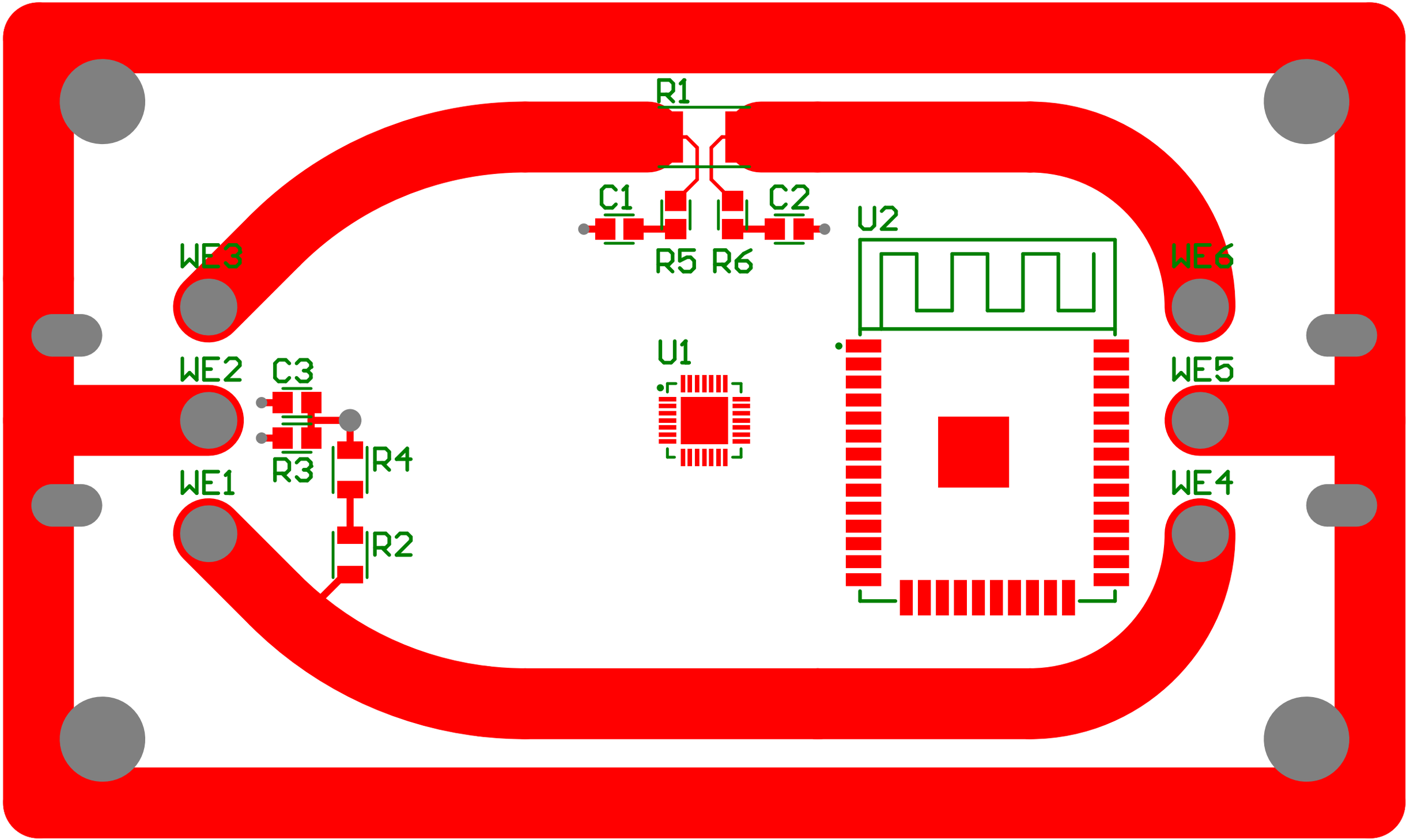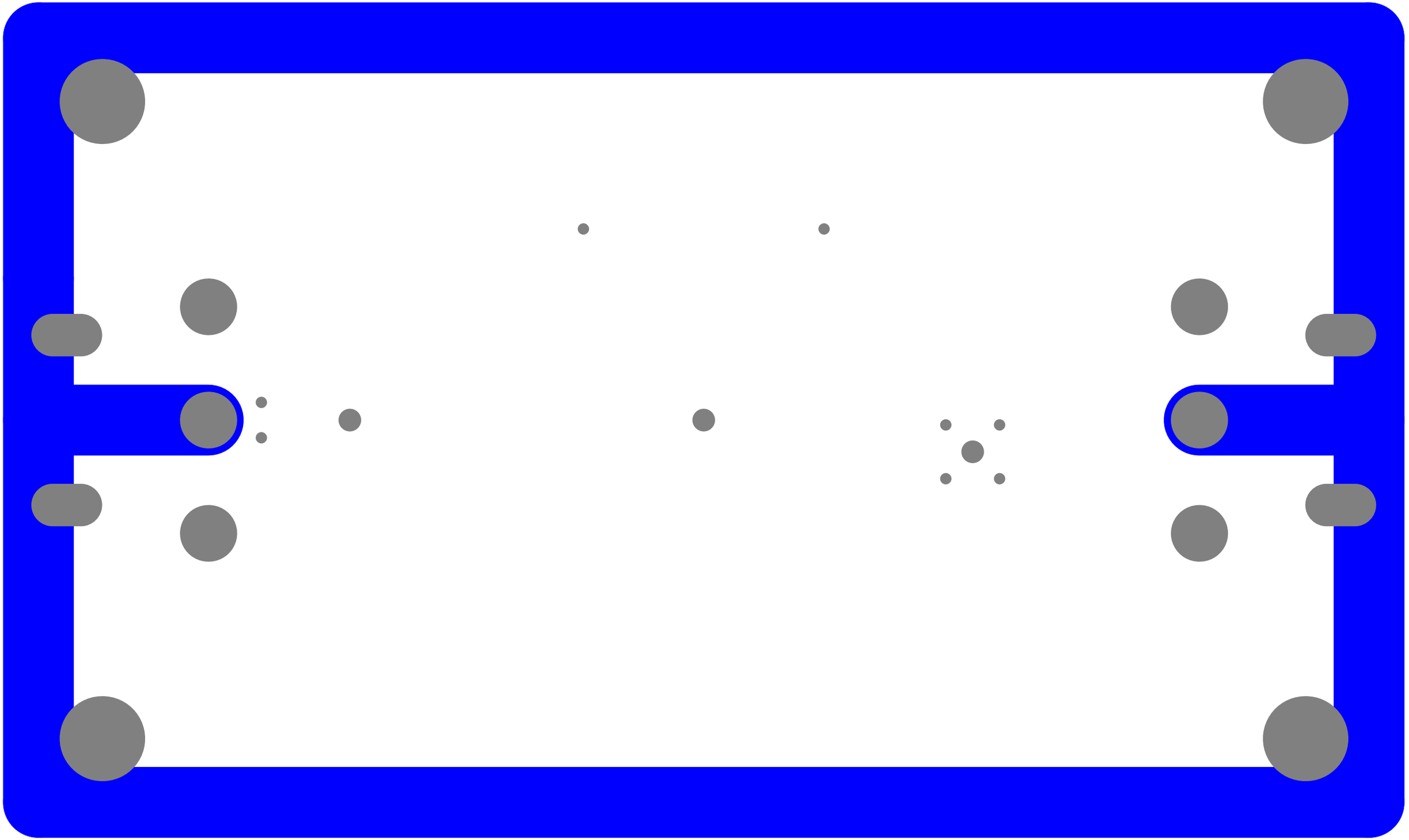
R1
C1
C2
U2
WE3
WE6
R5
R6
U1
WE2
C3
WE5
R3
R4
WE1
WE4
R2