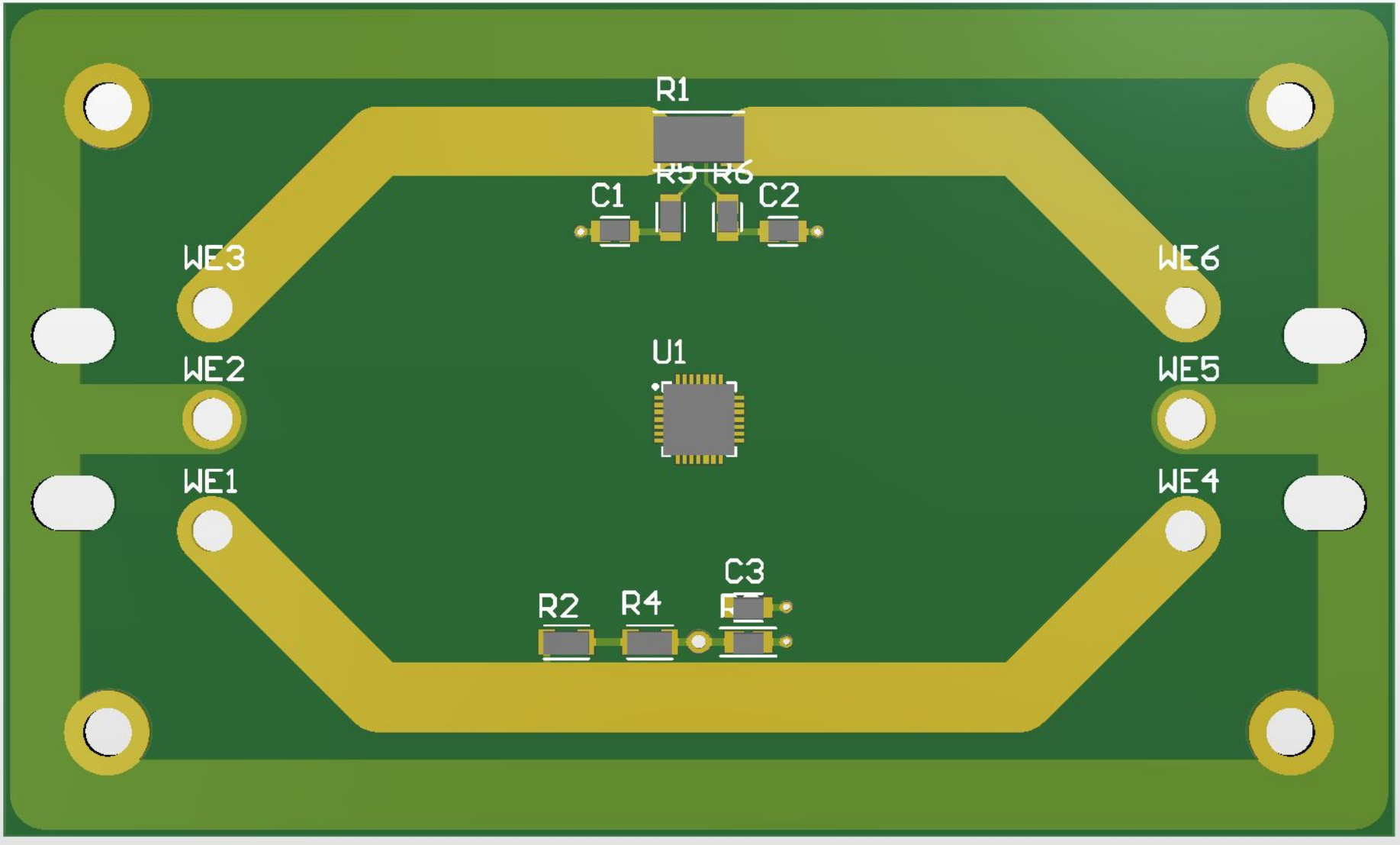
R1
R5
R6
C1
C2
WE3
WE6
U1
WE2
WE5
WE1
WE4
C3
R2
R4

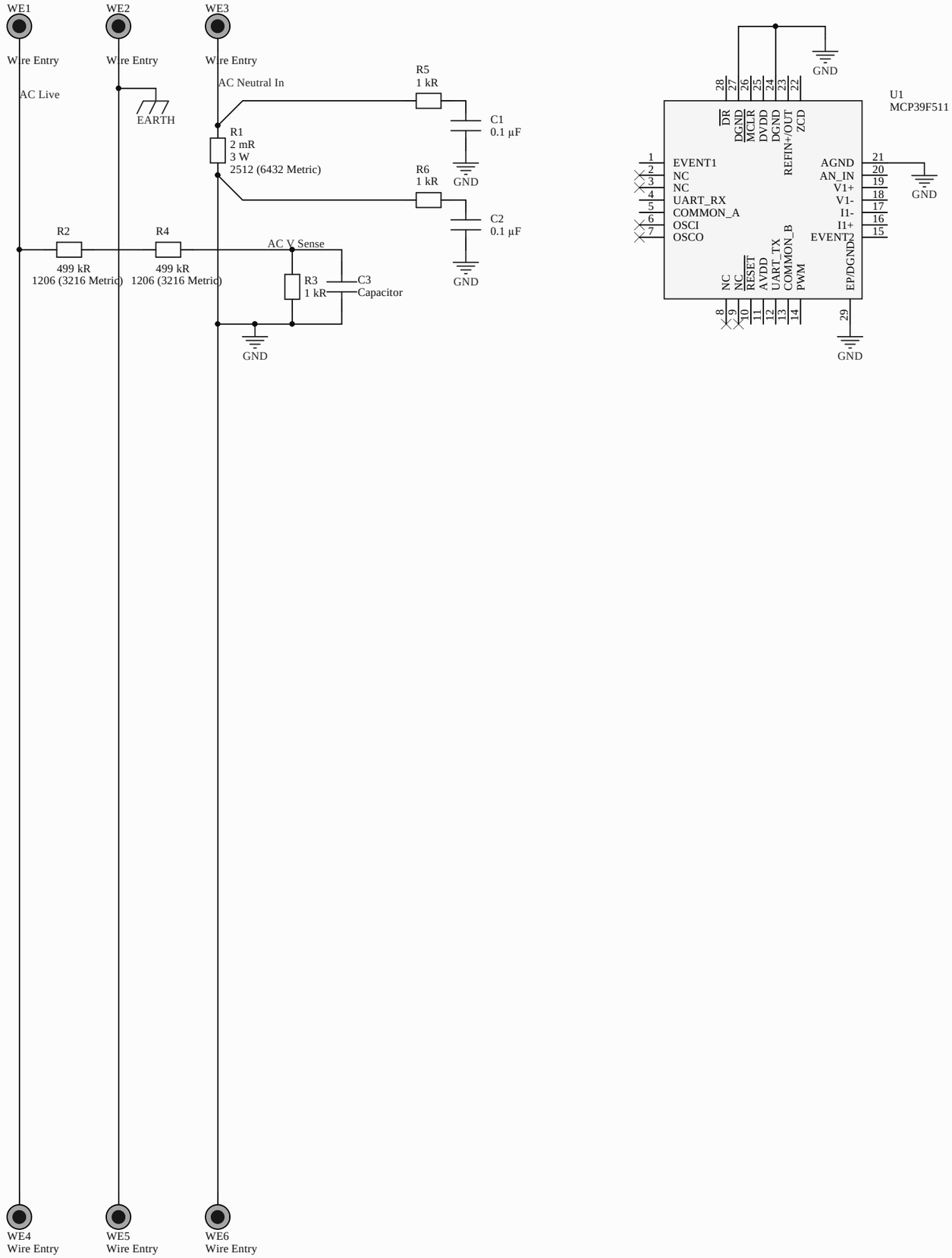

Title	*Smart AC Monitor*		
Size: A3	Number:	Revision: 0	
Date: 6/01/2020	Time: 12:56:20 PM	Sheet 1 of 1	
File: F:\Users\Lachlan500\Documents\Smart-AC-Monitor\Altium Project\Smart_AC_Monitor.SchDoc			

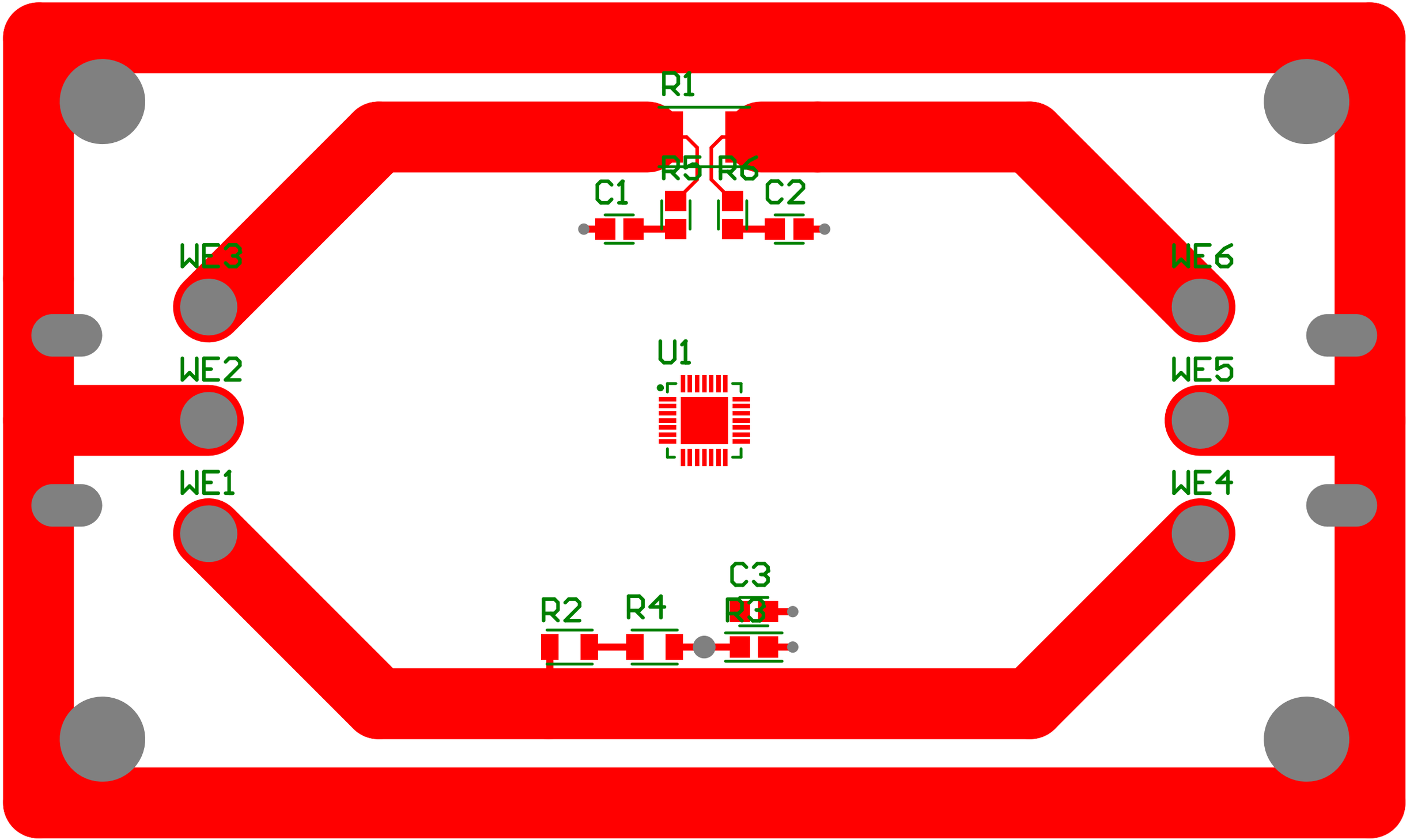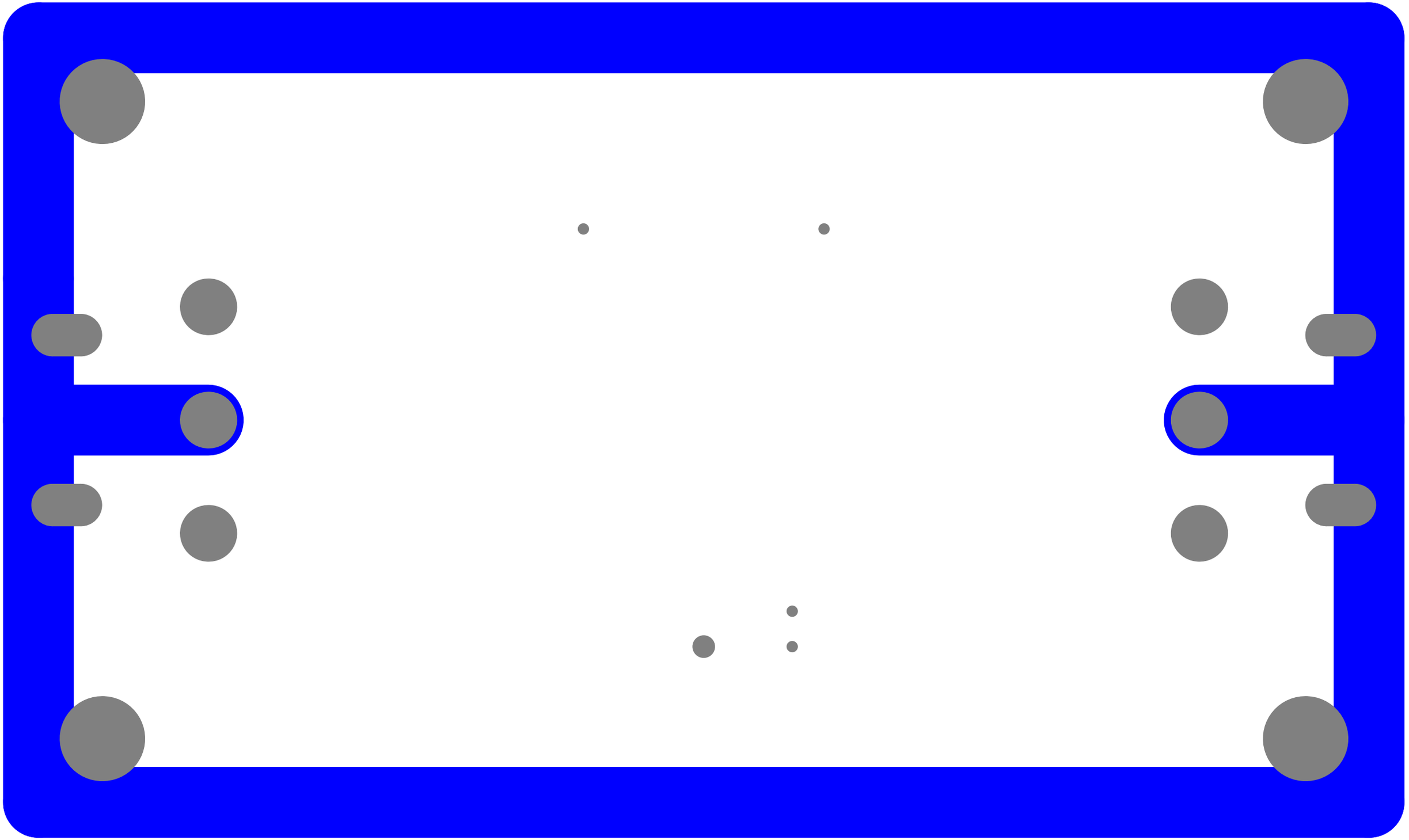
R1
R5
R6
C1
C2
WE3
WE6
U1
WE2
WE5
WE1
WE4
C3
R2
R4
R3