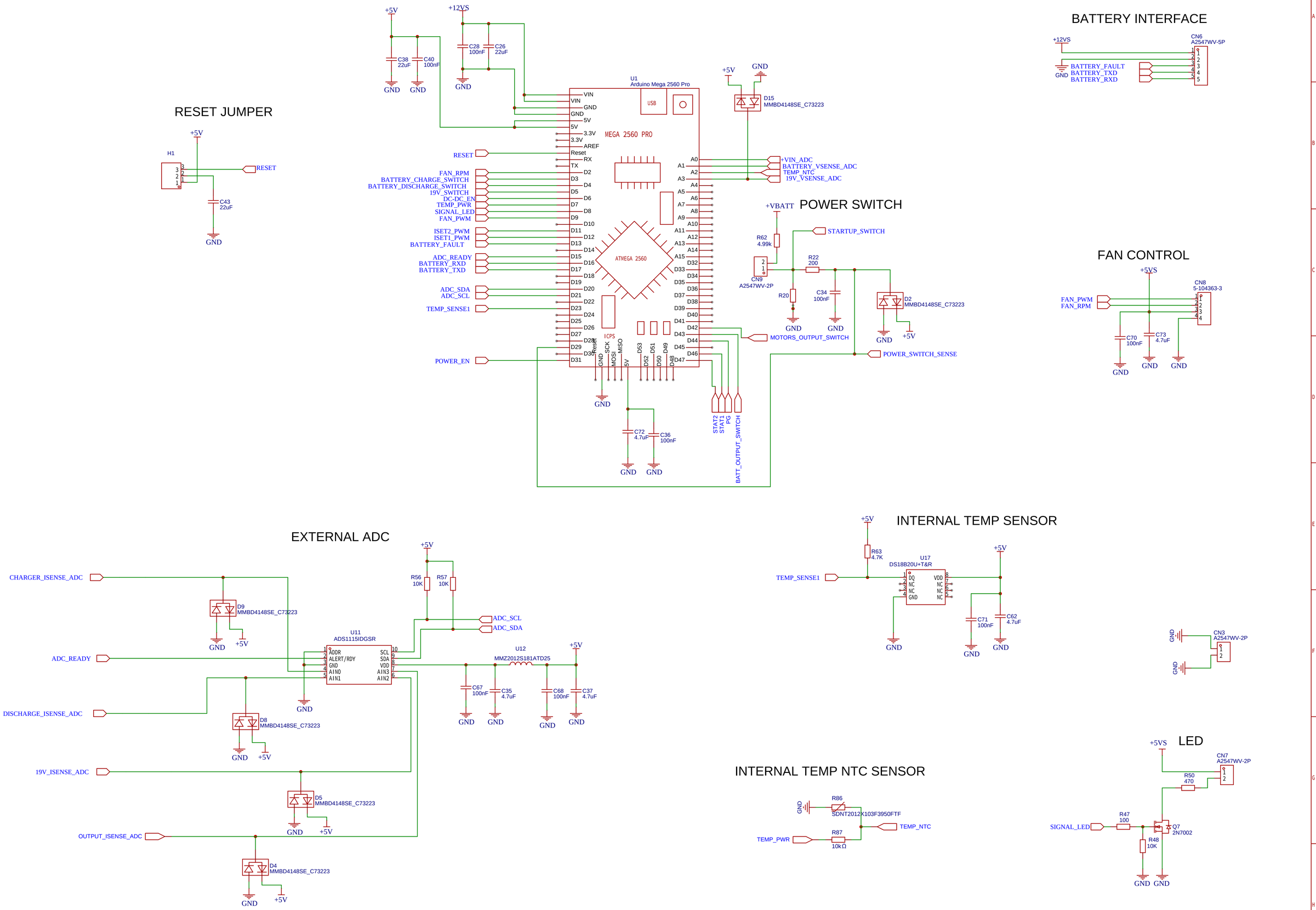

TITLE: PowerModuleV3.1F	REV: 3.1
Company: lacina.dev	Sheet: 1/3
Date: 2023-03-24	Drawn By: CleanEnergy0621, lacina.d

EasyEDA

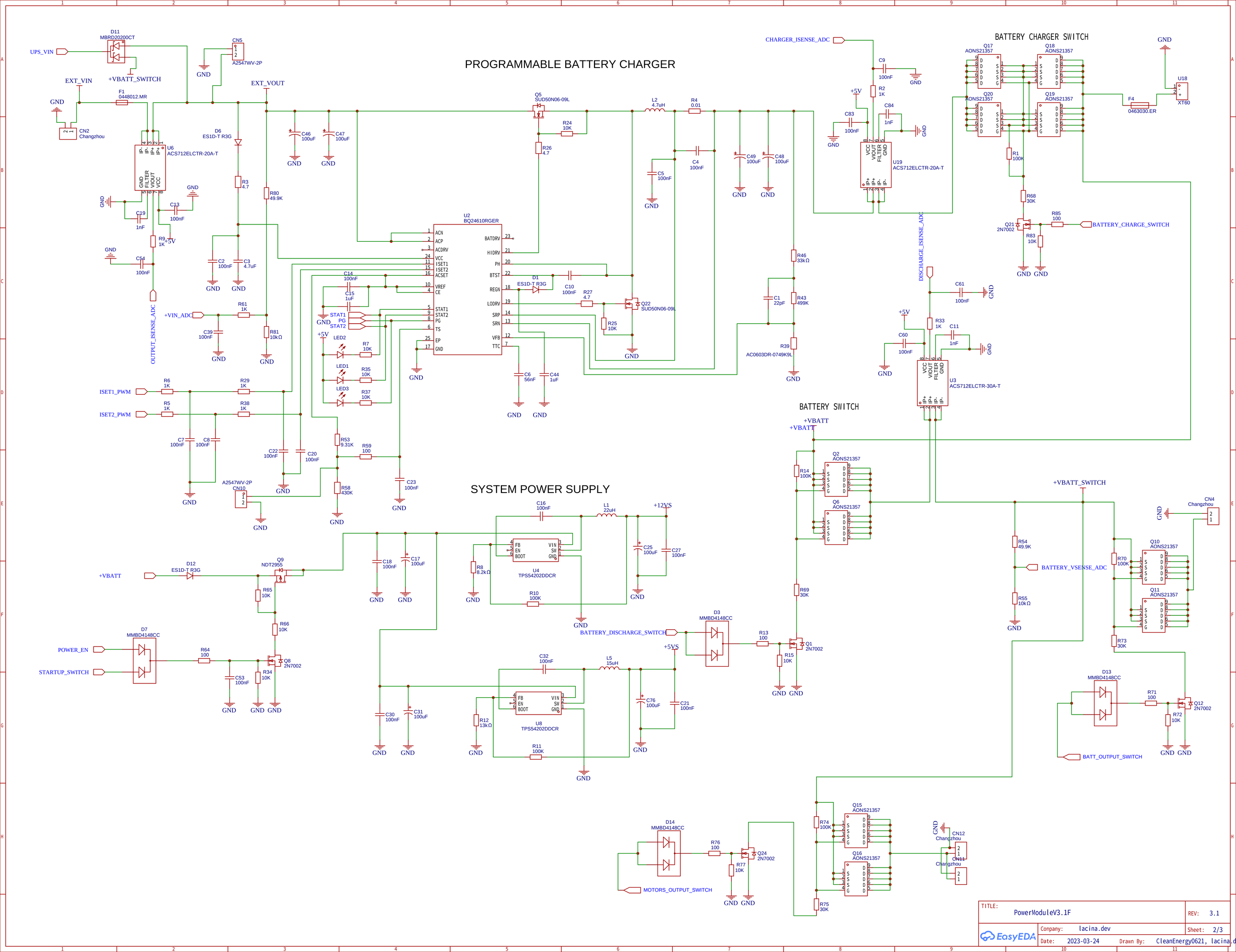
PROGRAMMABLE BATTERY CHARGER
SYSTEM POWER SUPPLY
BATTERY CHARGER SWITCH
BATTERY SWITCH
U2 BQ24610RGER
U6 ACS712ELCTR-20A-T
U19 ACS712ELCTR-20A-T
U3 ACS712ELCTR-30A-T
U4 TPS54202DDCR
U8 TPS54202DDCR
Q5 SUD50N06-09L
Q22 SUD50N06-09L
Q17 AONS21357
Q18 AONS21357
Q19 AONS21357
Q20 AONS21357
Q21 2N7002
Q2 AONS21357
Q6 AONS21357
Q10 AONS21357
Q11 AONS21357
Q15 AONS21357
Q16 AONS21357
Q9 NDT2955
Q8 2N7002
Q1 2N7002
Q12 2N7002
Q24 2N7002
D11 MBRD20200CT
D6 ES1D-T R3G
D1 ES1D-T R3G
D12 ES1D-T R3G
D7 MMBD4148CC
D3 MMBD4148CC
D13 MMBD4148CC
D14 MMBD4148CC
CN5 A2547WV-2P
CN10 A2547WV-2P
CN2 Changzhou
CN4 Changzhou
CN12 Changzhou
CN11 Changzhou
U18 XT60
F1 0448012.MR
F4 0463030.ER
UPS_VIN
EXT_VIN
+VBATT_SWITCH
EXT_VOUT
CHARGER_ISENSE_ADC
DISCHARGE_ISENSE_ADC
OUTPUT_ISENSE_ADC
+VIN_ADC
ISET1_PWM
ISET2_PWM
BATTERY_CHARGE_SWITCH
BATTERY_VSENSE_ADC
BATTERY_DISCHARGE_SWITCH
BATT_OUTPUT_SWITCH
MOTORS_OUTPUT_SWITCH
POWER_EN
STARTUP_SWITCH
+VBATT
+12VS
+5VS
+5V
GND
TITLE: PowerModuleV3.1F
REV: 3.1
Company: lacina.dev
Sheet: 2/3
Date: 2023-03-24
Drawn By: CleanEnergy0621, lacina.d
EasyEDA

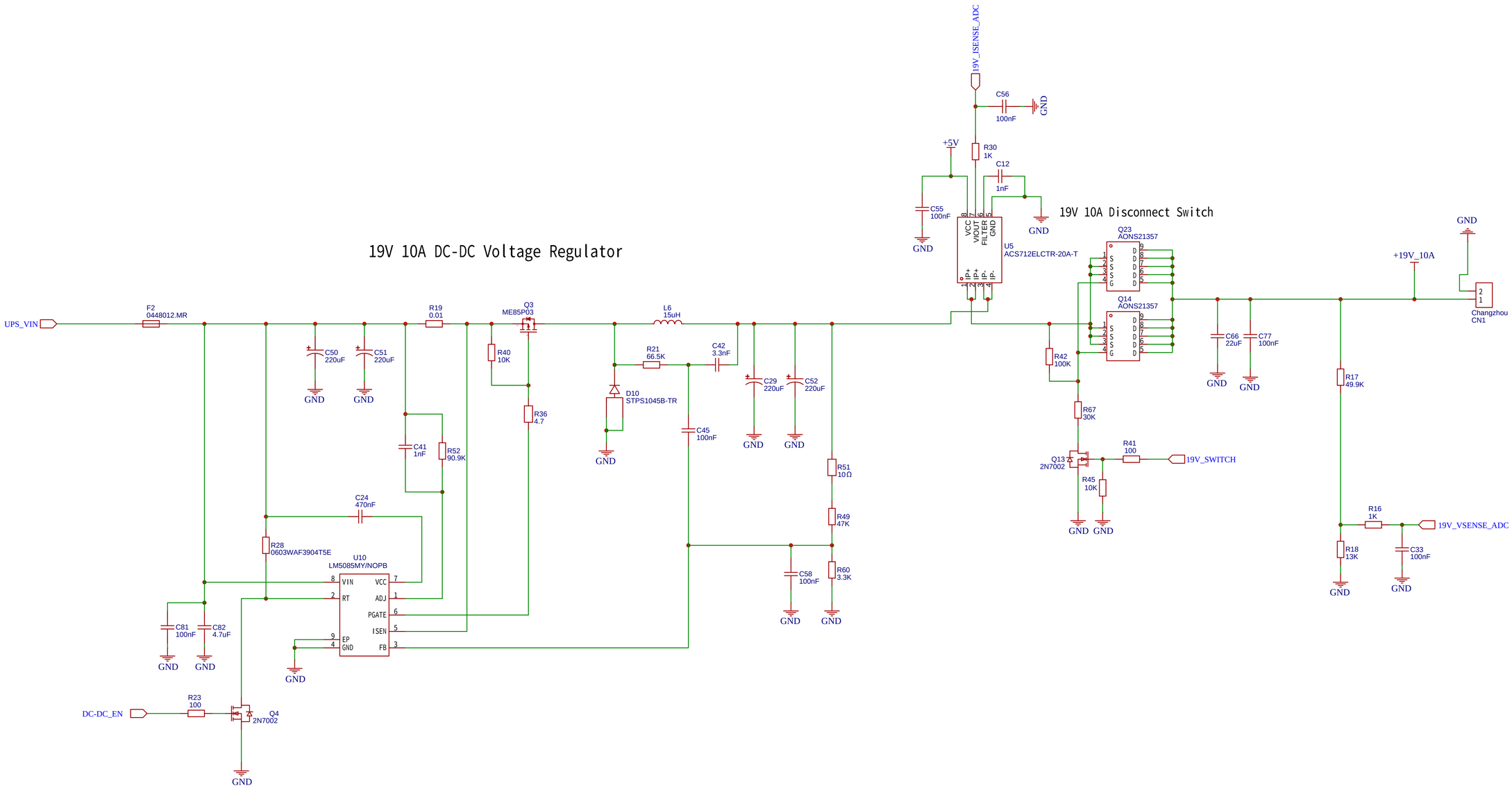

TITLE: PowerModuleV3.1F		REV: 3.1
EasyEDA	Company: lacina.dev	Sheet: 3/3
	Date: 2023-03-24 Drawn By: CleanEnergy0621, lacina.d	