Power Supply

File: psu.kicad_sch

CM4 Connector 1

File: cm-conn1.kicad_sch

CM4 Connector 2

File: cm-conn2.kicad_sch

SATA Bridge

File: sata.kicad_sch

Peripherals

File: peripherals.kicad_sch

Git commit hash: f9c2ea4

License: CERN Open Hardware Licence Version 2 - Permissive

**https://github.com/laenzlinger/granit**

Sheet: /

File: granit.kicad_sch

***Title: Granit - Offsite Backup Device***

| | | |
|---|---|---|
| Size: A4 | Date: 2026-04-07 | **Rev: 0.1** |
| KiCad E.D.A. 10.0.0 | | Id: 1/6 |

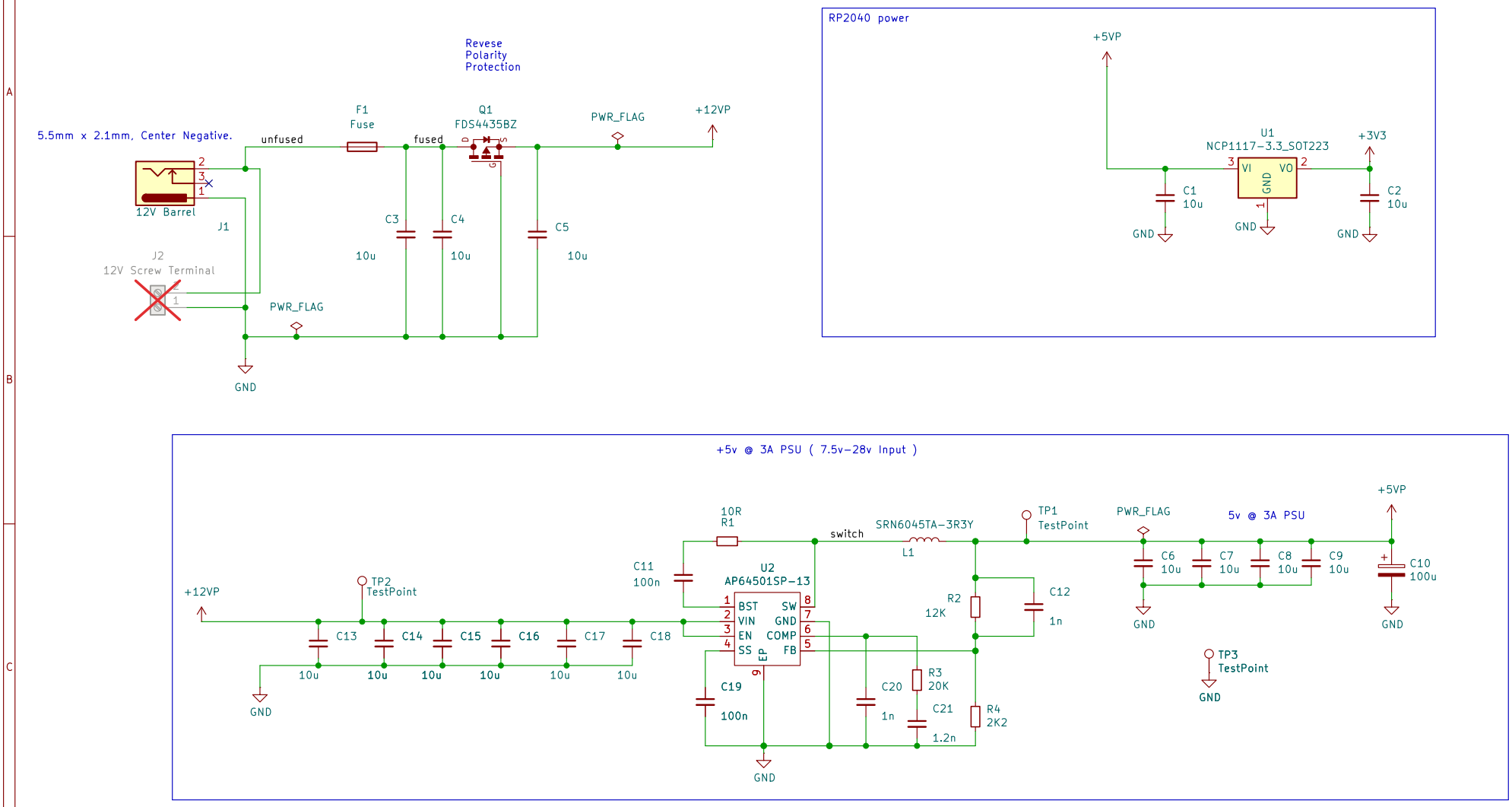


Git commit hash: f9c2ea4
License: CERN Open Hardware Licence Version 2 - Permissive
**https://github.com/laenzlinger/granit**

Sheet: /Power Supply/
File: psu.kicad_sch

**Title: Granit - Power Supply**

| | | |
|---|---|---|
| Size: A4 | Date: 2026-04-07 | **Rev: 0.1** |
| KiCad E.D.A. 10.0.0 | | Id: 2/6 |

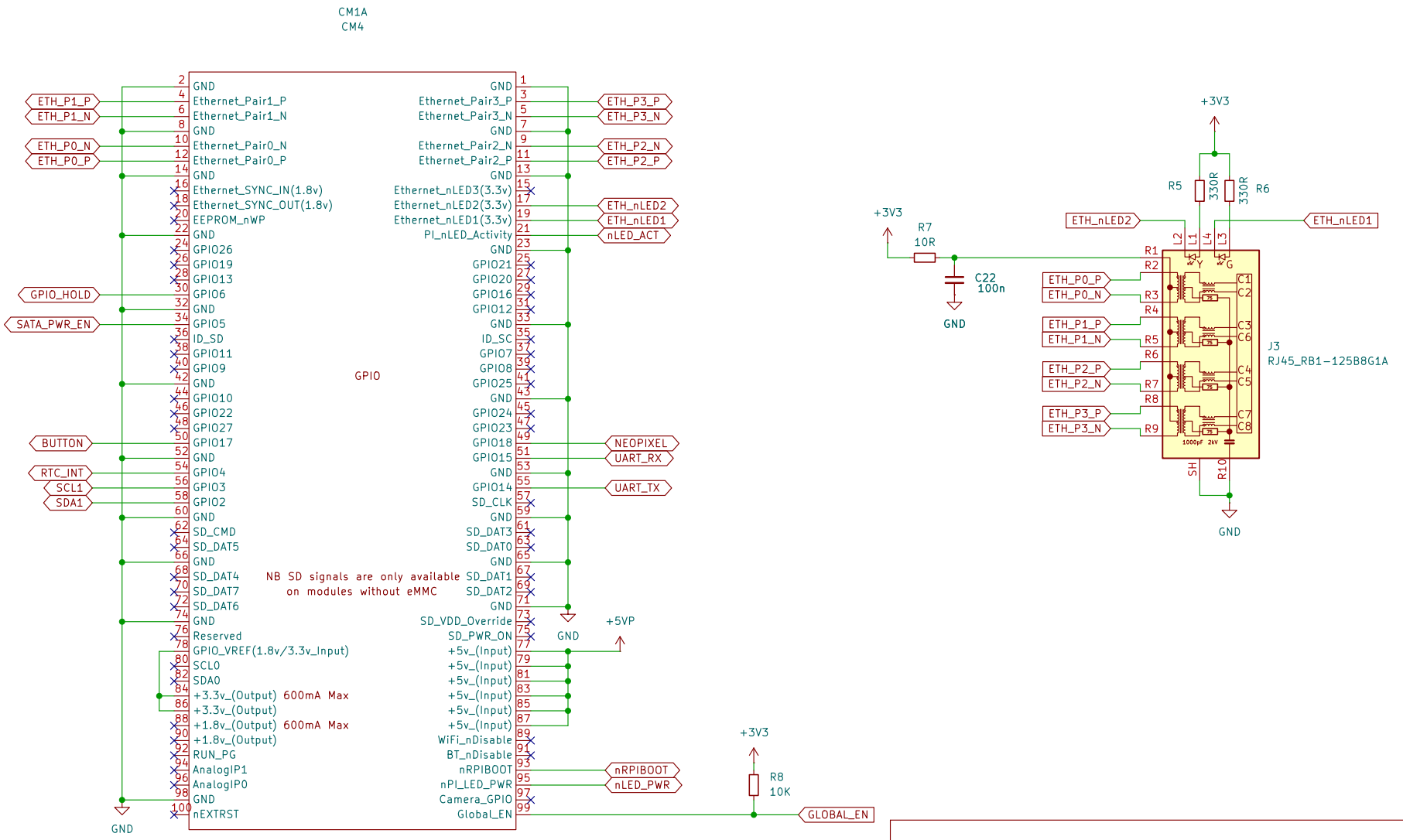


Git commit hash: f9c2ea4
License: CERN Open Hardware Licence Version 2 – Permissive
**https://github.com/laenzlinger/granit**

Sheet: /CM4 Connector 1/
File: cm-conn1.kicad_sch

**Title: Granit – cm-conn1**

| | | |
|---|---|---|
| Size: A4 | Date: 2026-04-07 | **Rev: 0.1** |
| KiCad E.D.A. 10.0.0 | | Id: 3/6 |

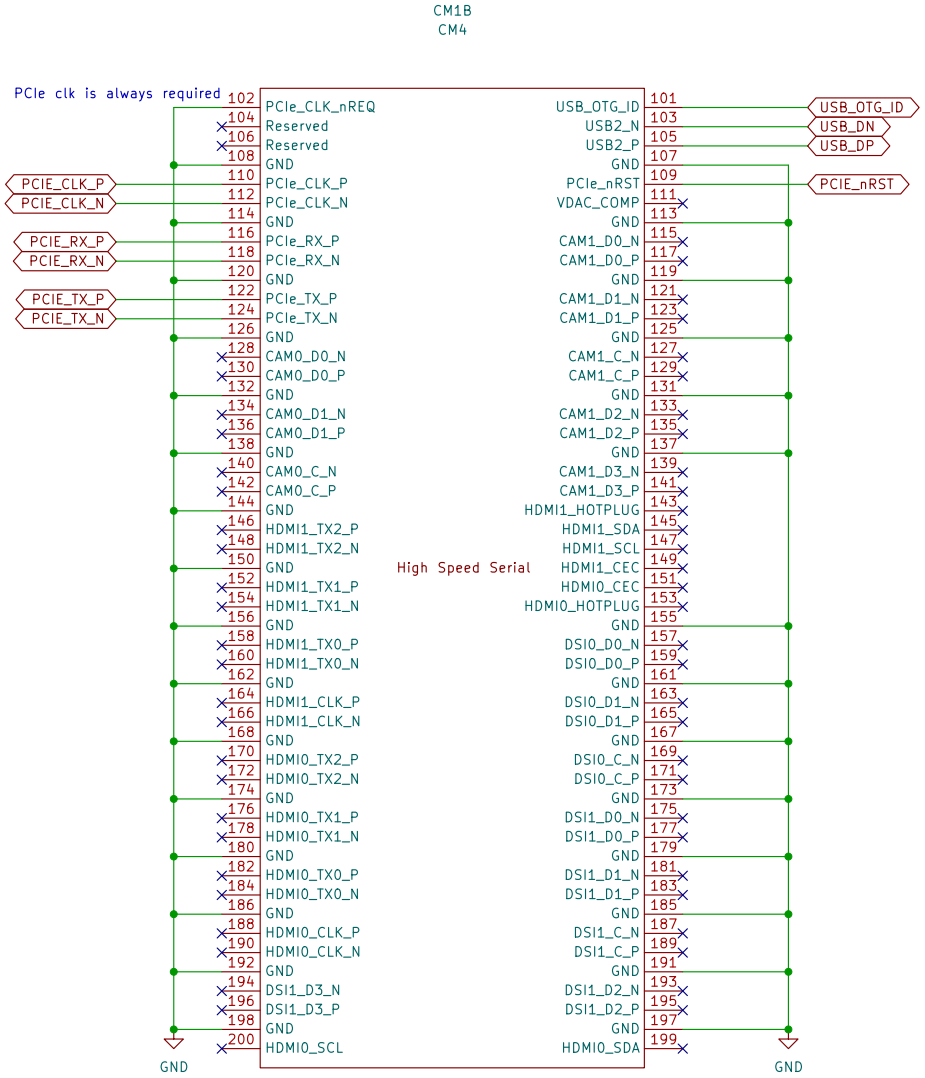


Git commit hash: f9c2ea4
License: CERN Open Hardware Licence Version 2 – Permissive
**https://github.com/laenzlinger/granit**

Sheet: /CM4 Connector 2/
File: cm-conn2.kicad_sch

**Title: Granit – cm-conn2**

| | | |
|---|---|---|
| Size: A4 | Date: 2026-04-07 | **Rev: 0.1** |
| KiCad E.D.A. 10.0.0 | | Id: 4/6 |

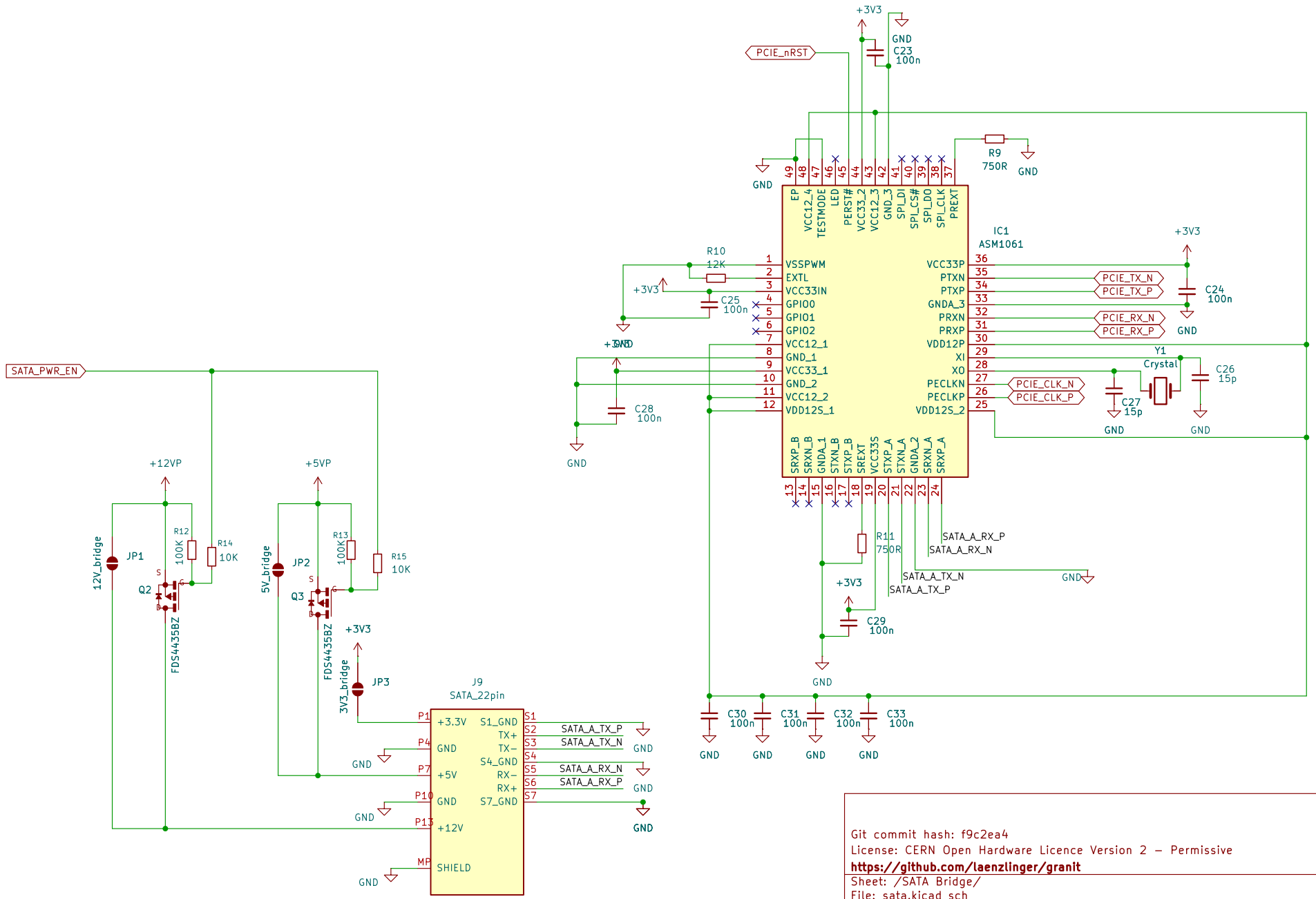


Git commit hash: f9c2ea4
License: CERN Open Hardware Licence Version 2 – Permissive
**https://github.com/laenzlinger/granit**

Sheet: /SATA Bridge/
File: sata.kicad_sch

**Title: Granit – ASM1061 PCIe-to-SATA**

| | | |
|---|---|---|
| Size: A4 | Date: 2026-04-07 | **Rev: 0.1** |
| KiCad E.D.A. 10.0.0 | | Id: 5/6 |

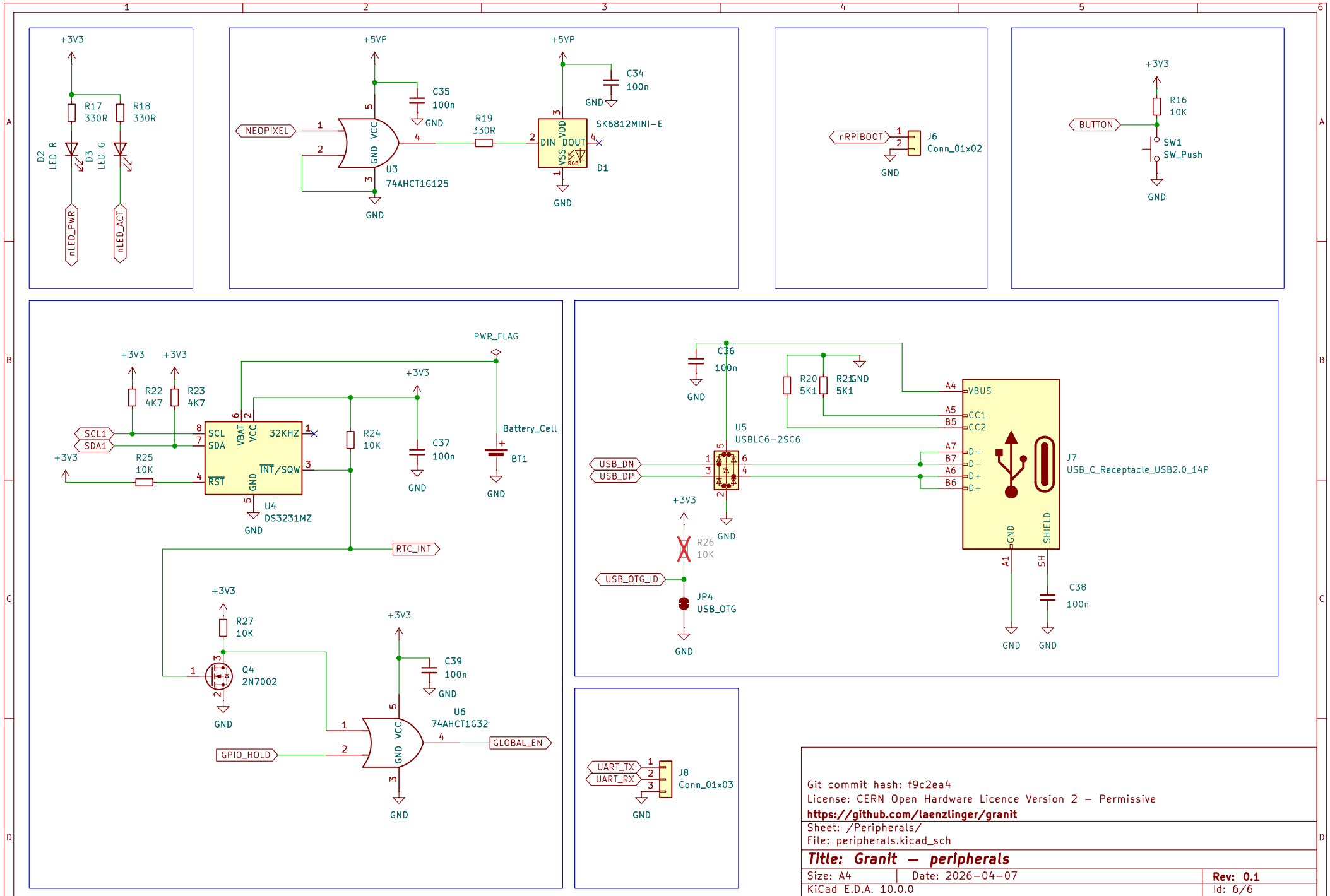


Git commit hash: f9c2ea4
License: CERN Open Hardware Licence Version 2 – Permissive
**https://github.com/laenzlinger/granit**

Sheet: /Peripherals/
File: peripherals.kicad_sch

**Title: Granit – peripherals**

| | | |
|---|---|---|
| Size: A4 | Date: 2026-04-07 | **Rev: 0.1** |
| KiCad E.D.A. 10.0.0 | | Id: 6/6 |