Power Supply

File: psu.kicad_sch

CM4 Connector 1

File: cm-conn1.kicad_sch

CM4 Connector 2

File: cm-conn2.kicad_sch

SATA Bridge

File: sata.kicad_sch

Peripherals

File: peripherals.kicad_sch

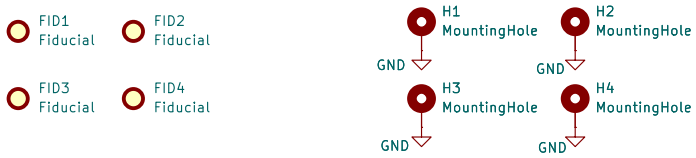

Git commit hash: bd4911e

License: CERN Open Hardware Licence Version 2 - Permissive

https://github.com/laenzlinger/granit

Sheet: /

File: granit.kicad_sch

Title: Granit - Offsite Backup Device

Size: A4	Date: 2026-04-07	**Rev: 0.1**
KiCad E.D.A. 10.0.0		Id: 1/6

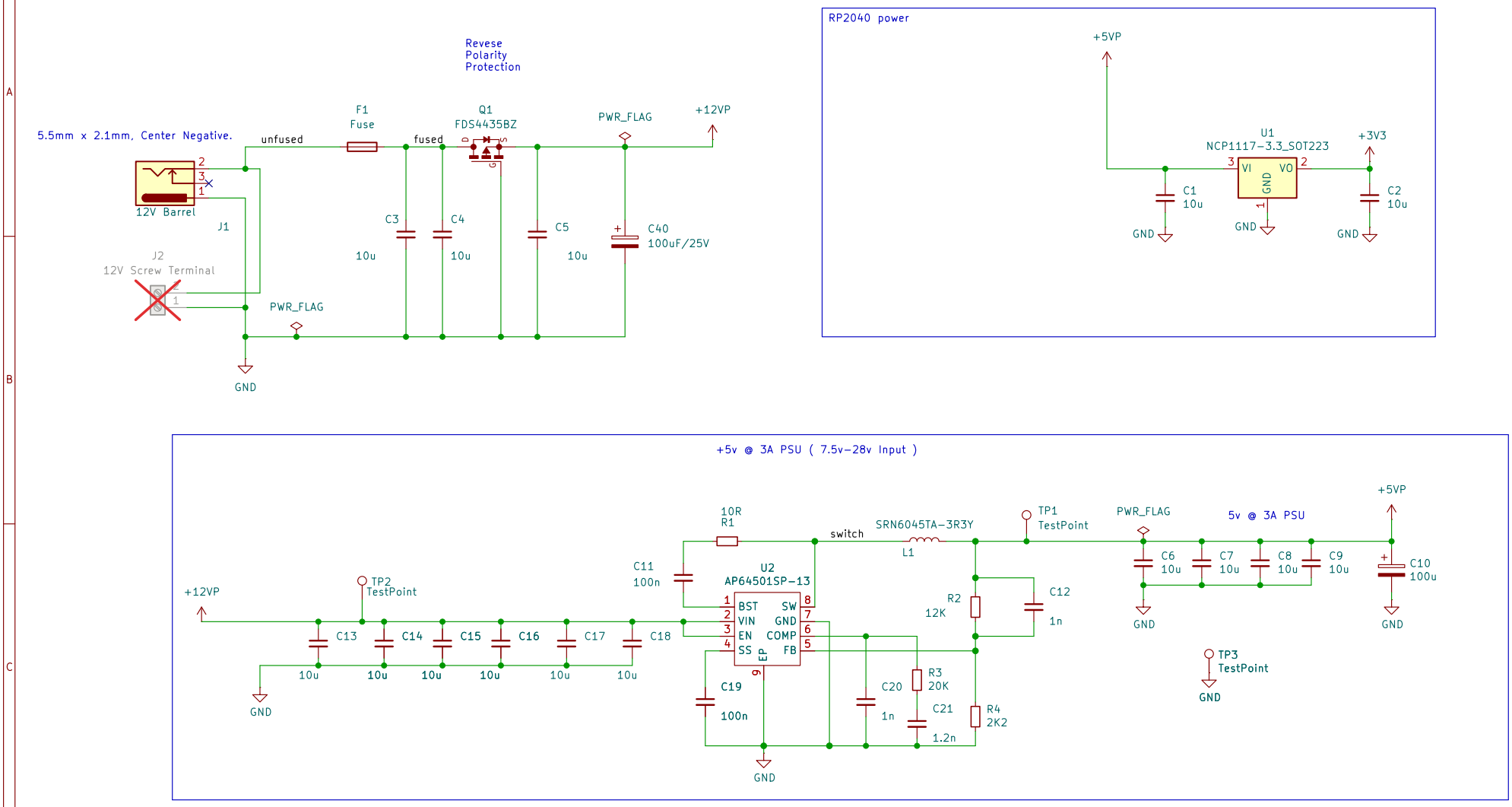

Git commit hash: bd4911e
License: CERN Open Hardware Licence Version 2 – Permissive
https://github.com/laenzlinger/granit

Sheet: /Power Supply/
File: psu.kicad_sch

Title: Granit – Power Supply

Size: A4	Date: 2026-04-07	**Rev: 0.1**
KiCad E.D.A. 10.0.0		Id: 2/6

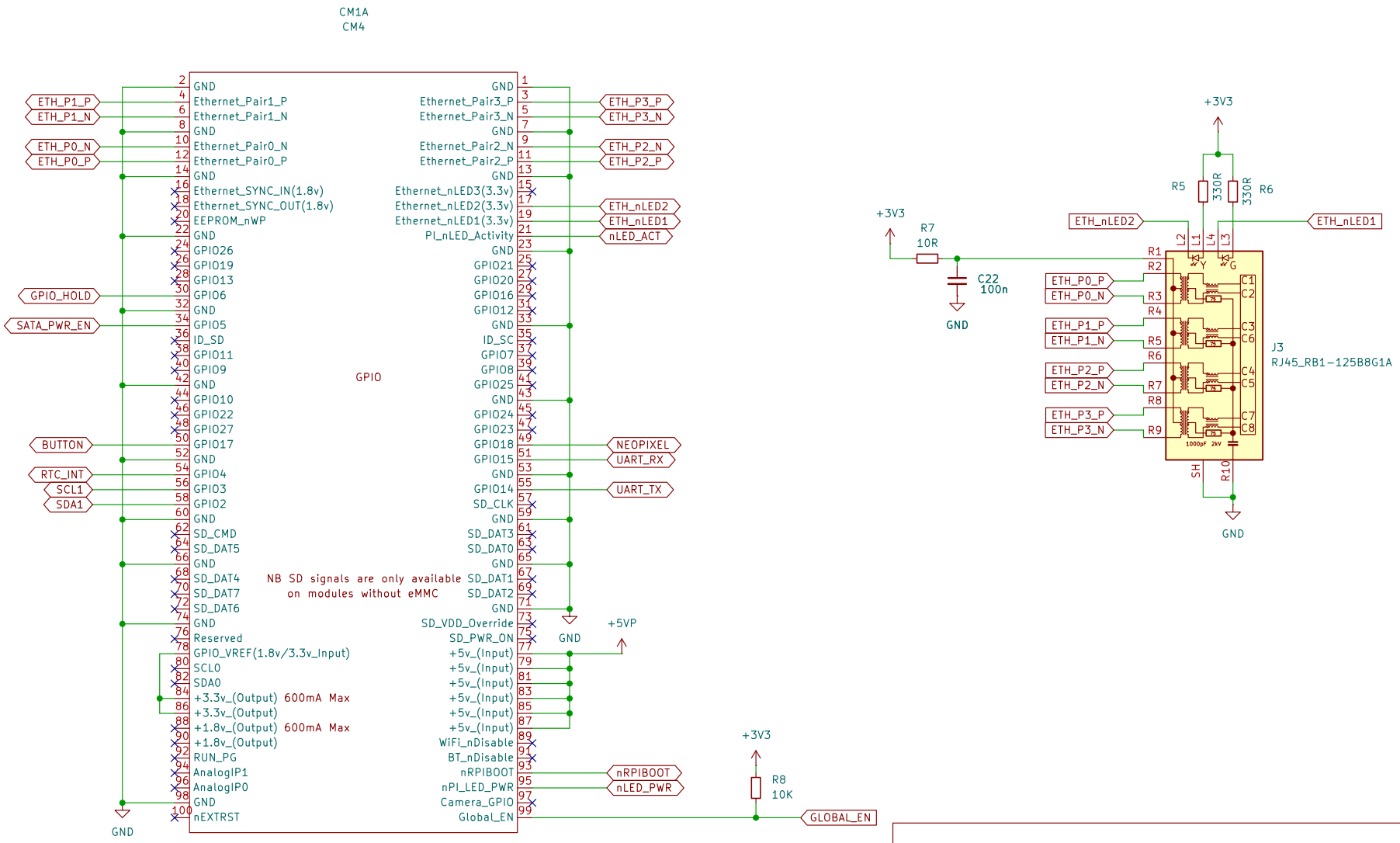

Git commit hash: bd4911e
License: CERN Open Hardware Licence Version 2 – Permissive
https://github.com/laenzlinger/granit

Sheet: /CM4 Connector 1/
File: cm-conn1.kicad_sch

Title: Granit – cm-conn1

Size: A4	Date: 2026-04-07	**Rev: 0.1**
KiCad E.D.A. 10.0.0		Id: 3/6

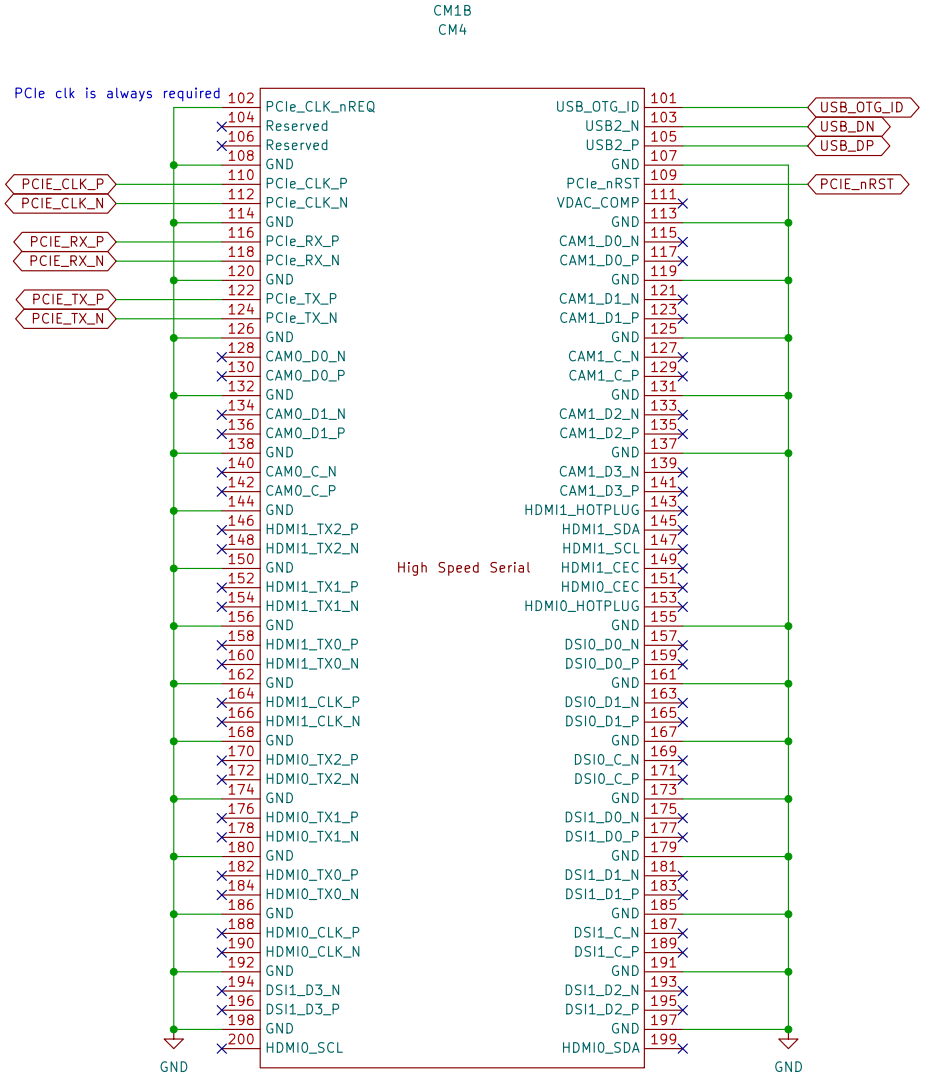

Git commit hash: bd4911e

License: CERN Open Hardware Licence Version 2 – Permissive

https://github.com/laenzlinger/granit

Sheet: /CM4 Connector 2/

File: cm-conn2.kicad_sch

Title: Granit – cm-conn2

Size: A4	Date: 2026-04-07	**Rev: 0.1**
KiCad E.D.A. 10.0.0		Id: 4/6

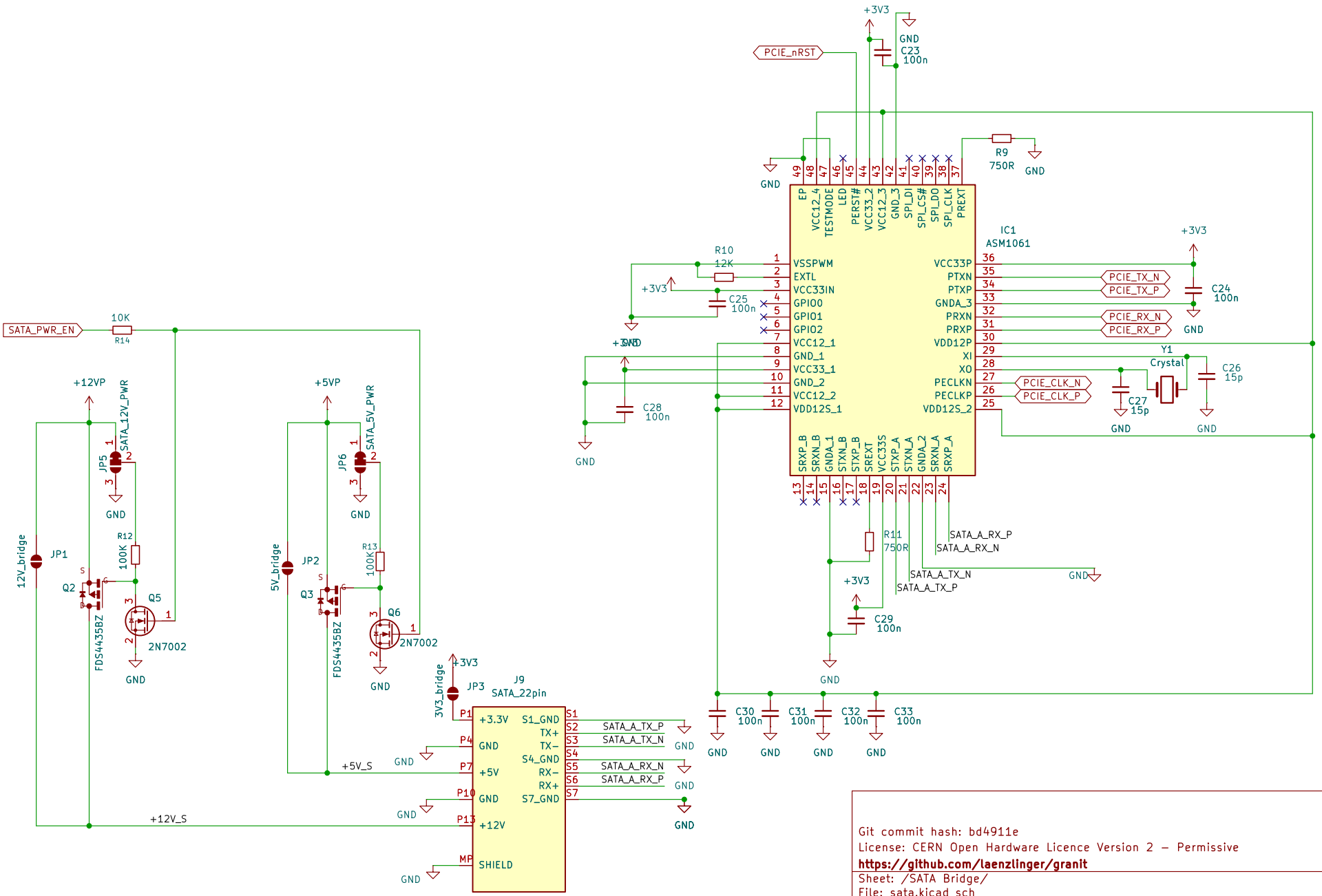

Git commit hash: bd4911e
License: CERN Open Hardware Licence Version 2 – Permissive
https://github.com/laenzlinger/granit
Sheet: /SATA Bridge/
File: sata.kicad_sch

Title: Granit – ASM1061 PCIe-to-SATA

Size: A4	Date: 2026-04-07	**Rev: 0.1**
KiCad E.D.A. 10.0.0		Id: 5/6

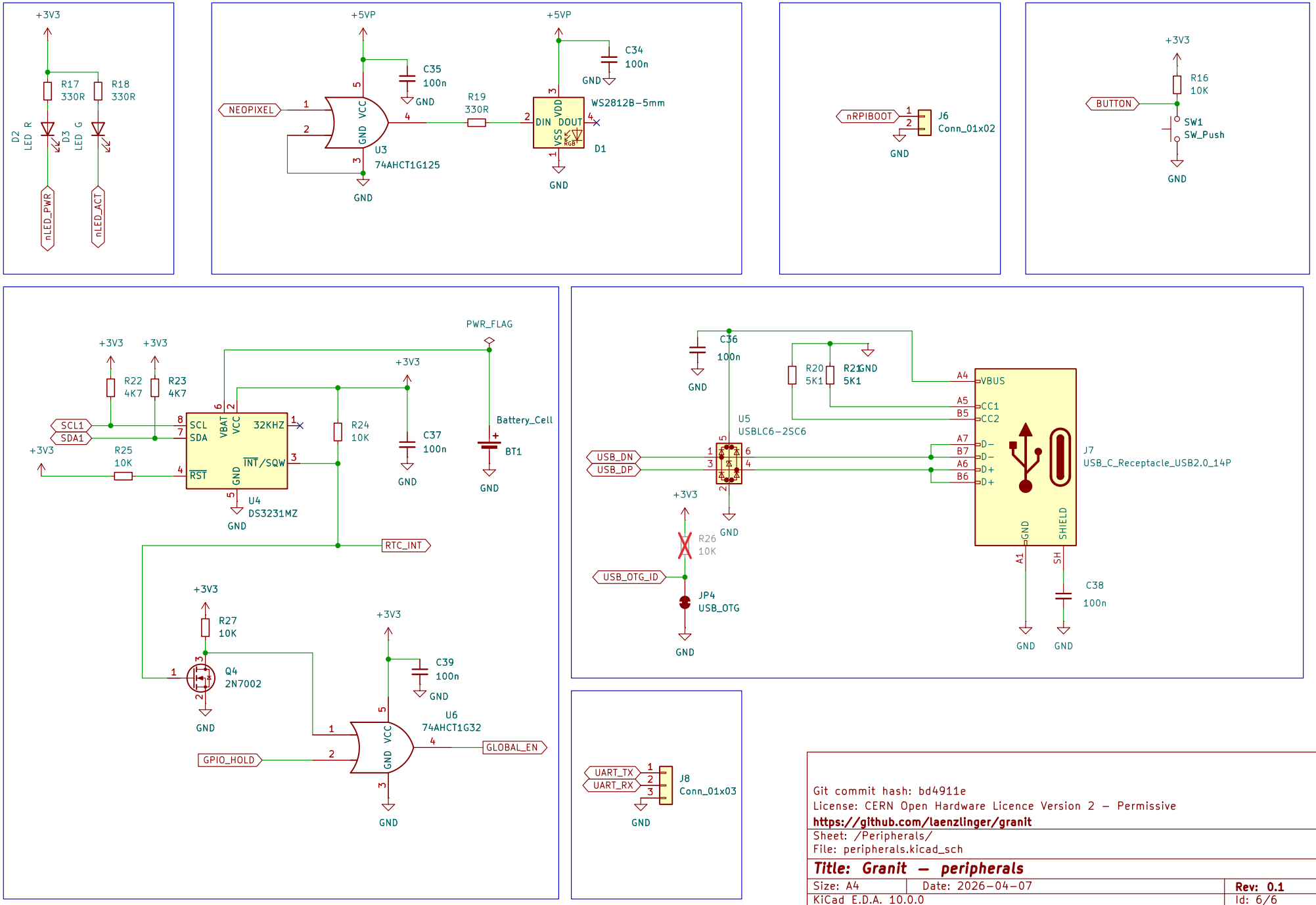

Git commit hash: bd4911e

License: CERN Open Hardware Licence Version 2 – Permissive

https://github.com/laenzlinger/granit

Sheet: /Peripherals/

File: peripherals.kicad_sch

Title: Granit – peripherals

Size: A4	Date: 2026-04-07	**Rev: 0.1**
KiCad E.D.A. 10.0.0		Id: 6/6