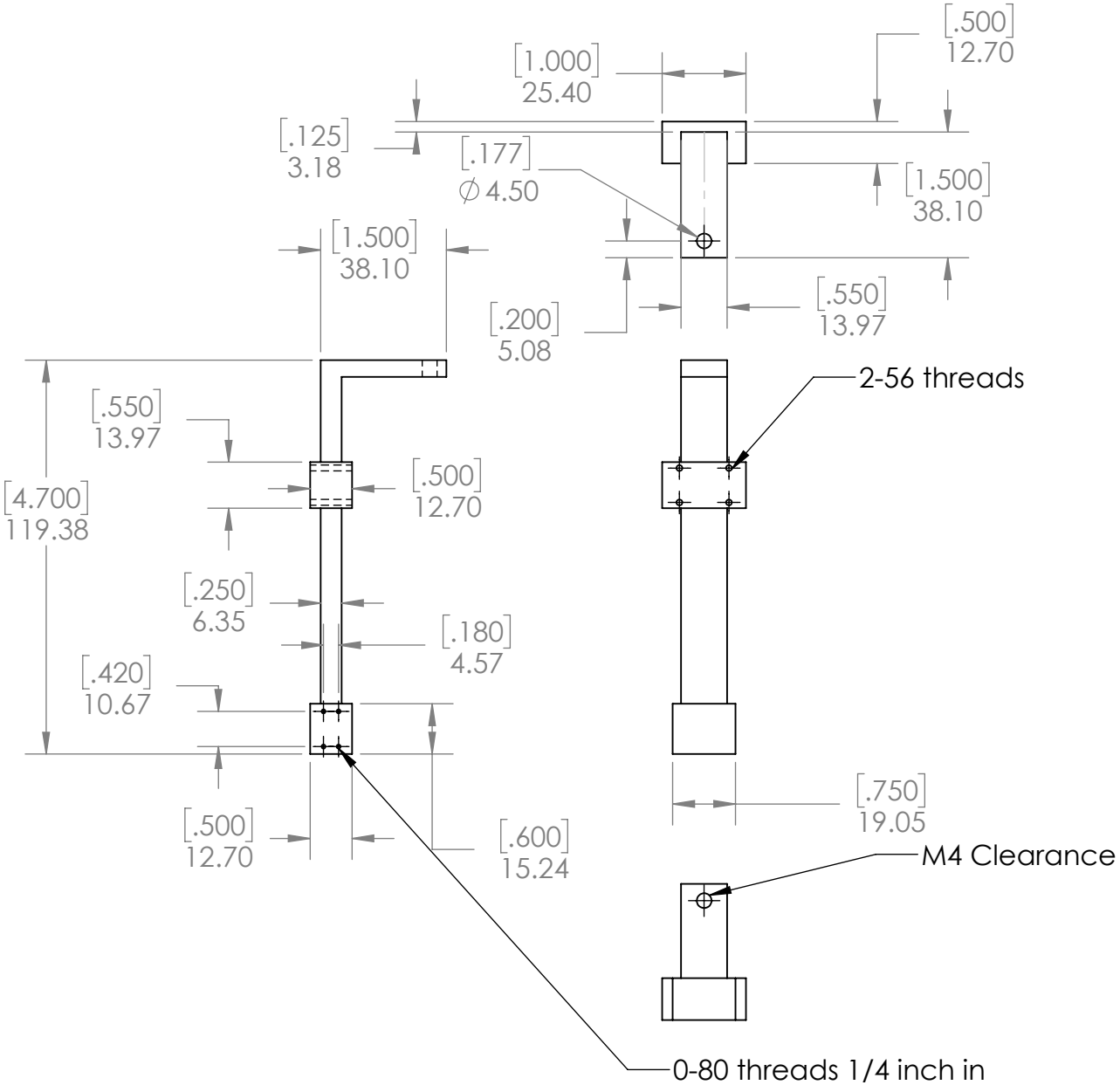

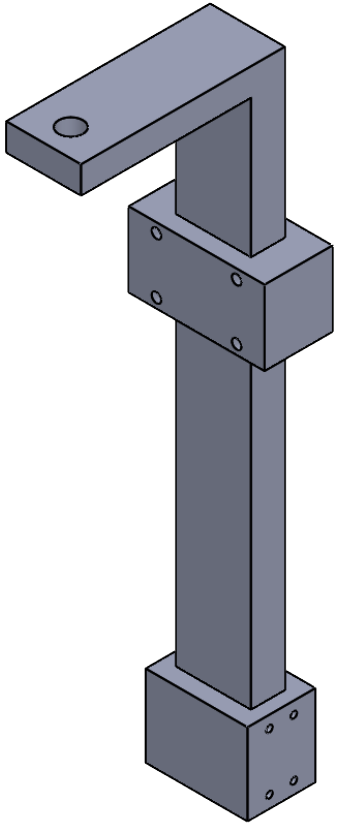

coupler_bracket