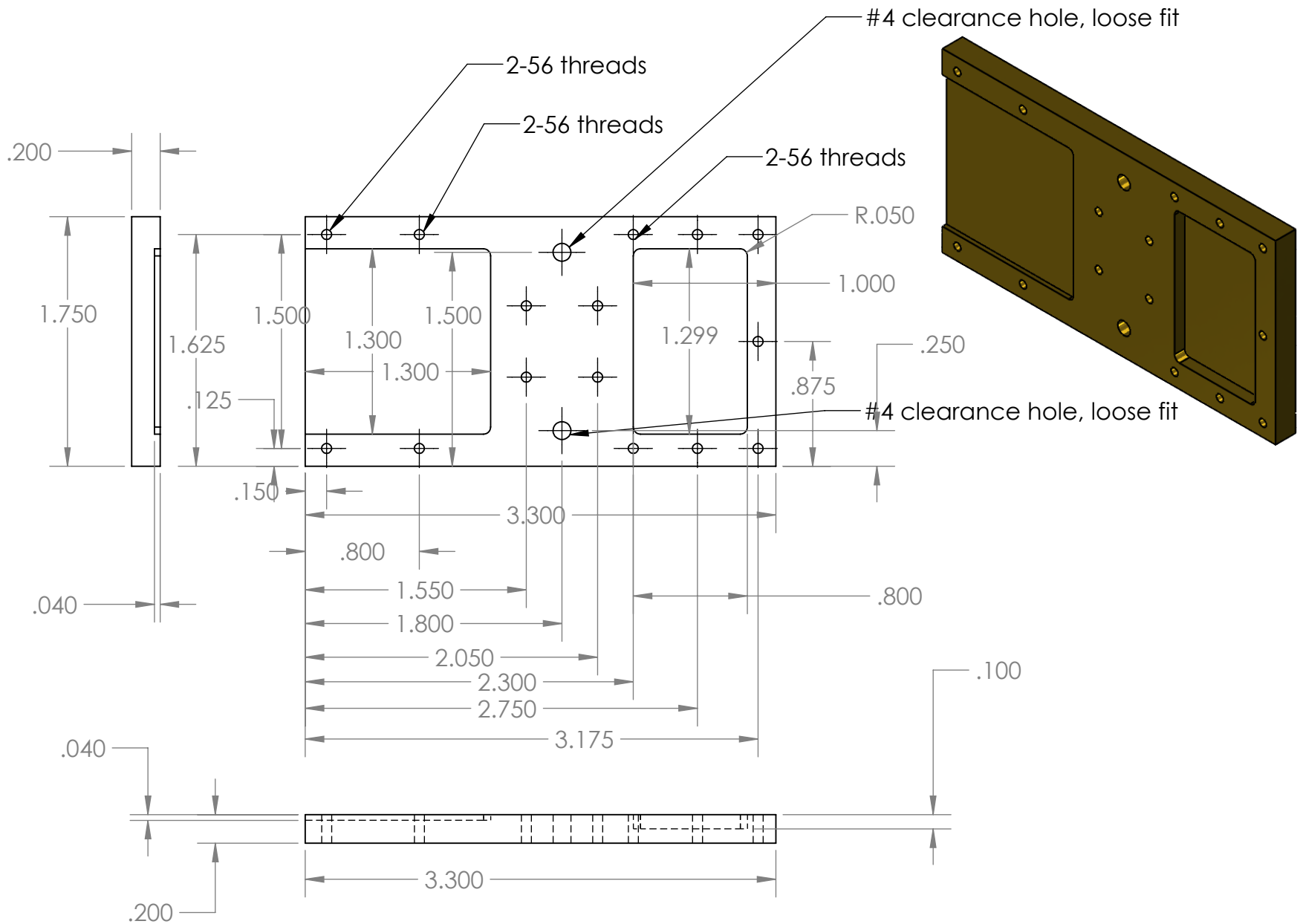

all holes are tapped 2-56 except for the #4 clearance holes

cold-sample-box-top