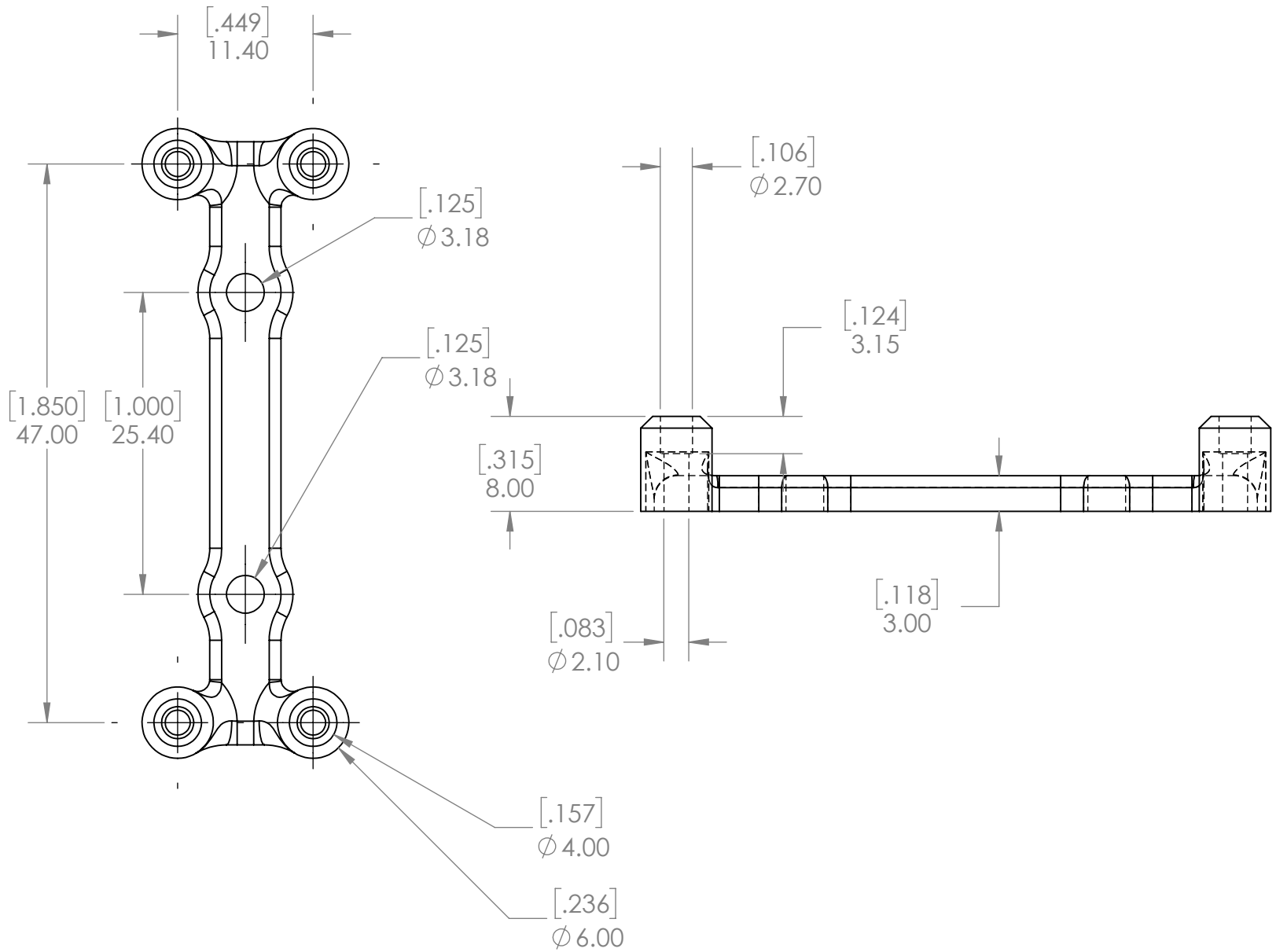
[.449]
11.40
[.125]
∅3.18
[.125]
∅3.18
[1.850]
47.00
[1.000]
25.40
[.157]
∅4.00
[.236]
∅6.00
[.106]
∅2.70
[.124]
3.15
[.315]
8.00
[.118]
3.00
[.083]
∅2.10

woodpico