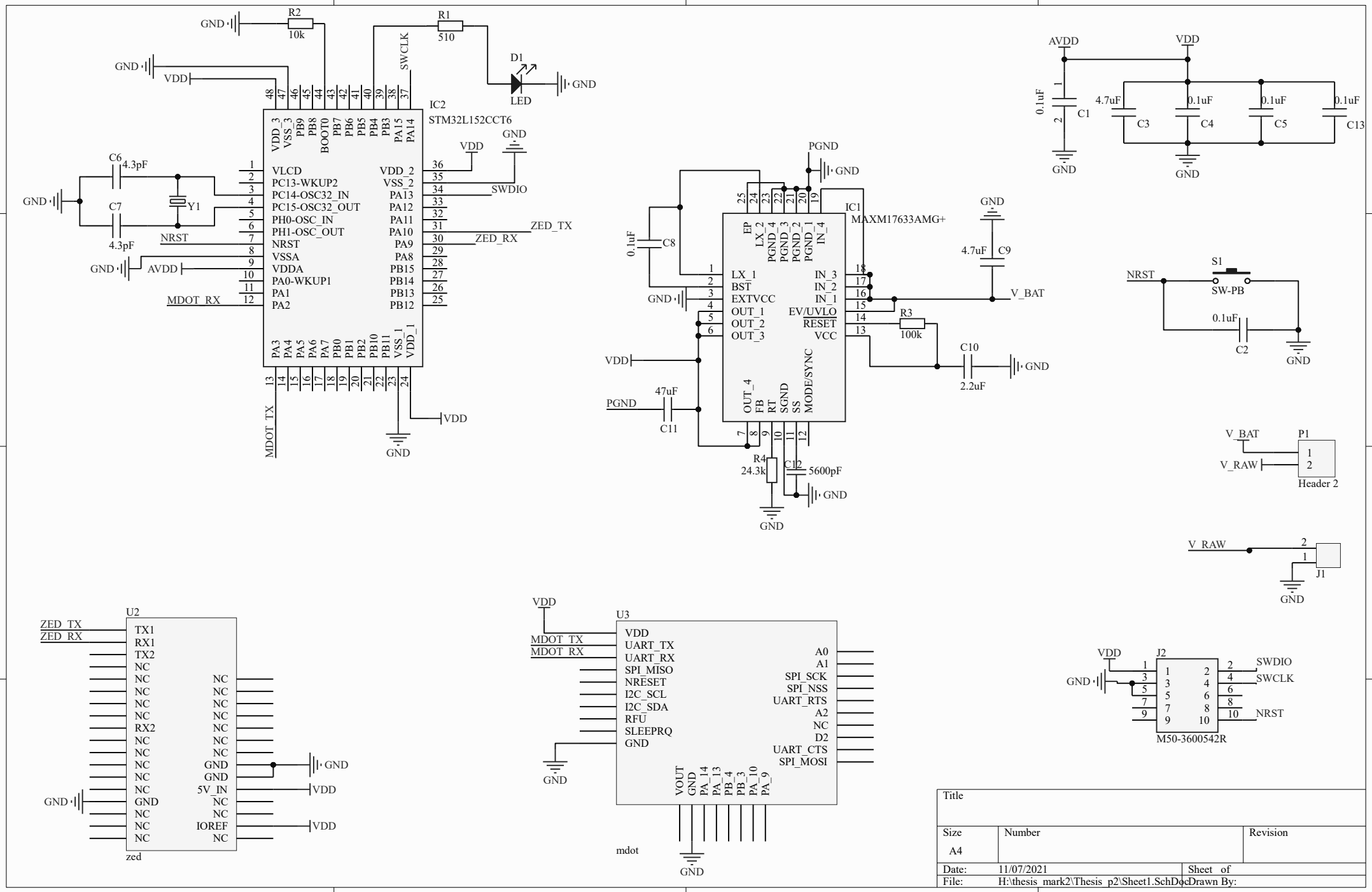
IC2
STM32L152CCT6
VLCD
PC13-WKUP2
PC14-OSC32_IN
PC15-OSC32_OUT
PH0-OSC_IN
PH1-OSC_OUT
NRST
VSSA
VDDA
PA0-WKUP1
PA1
PA2
VDD_2
VSS_2
PA13
PA12
PA11
PA10
PA9
PA8
PB15
PB14
PB13
PB12
VDD_3
VSS_3
PB9
PB8
BOOT0
PB7
PB6
PB5
PB4
PB3
PA15
PA14
PA3
PA4
PA5
PA6
PA7
PB0
PB1
PB2
PB10
PB11
VSS_1
VDD_1
SWCLK
SWDIO
ZED_TX
ZED_RX
MDOT_RX
MDOT_TX
R2
10k
R1
510
D1
LED
C6
4.3pF
C7
4.3pF
Y1
NRST
AVDD
GND
VDD
IC1
MAXM17633AMG+
EP
LX_2
PGND_4
PGND_3
PGND_2
PGND_1
IN_4
LX_1
BST
EXTVCC
OUT_1
OUT_2
OUT_3
IN_3
IN_2
IN_1
EV/UVLO
RESET
VCC
OUT_4
FB
RT
SGND
SS
MODE/SYNC
PGND
0.1uF
C8
4.7uF
C9
V_BAT
R3
100k
C10
2.2uF
47uF
C11
R4
24.3k
C12
5600pF
AVDD
VDD
0.1uF
C1
4.7uF
C3
0.1uF
C4
0.1uF
C5
0.1uF
C13
S1
SW-PB
0.1uF
C2
V_BAT
V_RAW
P1
Header 2
V_RAW
J1
U2
TX1
RX1
TX2
NC
RX2
5V_IN
IOREF
zed
U3
VDD
UART_TX
UART_RX
SPI_MISO
NRESET
I2C_SCL
I2C_SDA
RFU
SLEEPRQ
A0
A1
SPI_SCK
SPI_NSS
UART_RTS
A2
D2
UART_CTS
SPI_MOSI
VOUT
PA_14
PA_13
PB_4
PB_3
PA_10
PA_9
mdot
J2
SWDIO
SWCLK
NRST
M50-3600542R
Title
Size
A4
Number
Revision
Date: 11/07/2021
Sheet of
File: H:\thesis_mark2\Thesis_p2\Sheet1.SchDoc
Drawn By: