A Low-Power Conditional-Capture Flip-Flop in 32-nm CMOS Technology

Khaled Hammad [1220857], *Anas dawoud [1220523],*
Laith Ghoneim [1221123]
Department of Electrical and Computer Engineering
Birzeit University, Ramallah, Palestine

Abstract

This brief presents a 26-transistor conditional-capture flip-flop (CCFF) in 32-nm CMOS achieving 68.5% power reduction versus a conventional master-slave design. The single-ended topology employs NOR-based conditional logic to eliminate redundant switching when input equals output. Post-layout simulations at 1.0 V demonstrate 161-ps clock-to-output delay, 20-ps setup time, and 0.036-µm² area. The design achieves 42.9% faster switching and 24.6% area reduction while maintaining robust operation under parasitic extraction, proving effective for low-activity applications in IoT and mobile systems.

Index Terms—Conditional capture, flip-flop, low power, 32-nm CMOS, sequential logic.

I. Introduction

FLIP-FLOPS constitute fundamental building blocks in synchronous digital systems, consuming over 20% of total power and occupying up to 40% of chip area in modern processors [1]. Conventional master-slave flip-flops toggle internal nodes at every clock cycle regardless of data transitions, resulting in unnecessary power dissipation. This inefficiency becomes critical in battery-powered applications where data switching activity (α) typically remains below 0.5 [2].

Conditional-capture flip-flops (CCFFs) eliminate redundant transitions by enabling precharge node discharge only when input data differs from output state ($D \neq Q$). Previous CCFF implementations in 0.18–0.35-µm technologies demonstrated 45–67% power savings [2]–[4]. However, their applicability to sub-50-nm nodes with increased parasitic and short-channel effects remains unexplored.

This brief presents a 32-nm CCFF with comprehensive pre- and post-layout characterization. Contributions include: 1) single-ended 26-transistor architecture optimized for nanoscale processes; 2) detailed parasitic impact analysis showing 126× power increase from schematic to layout; 3) experimental validation achieving 68.5% power reduction and 42.9% speed improvement versus master-slave baseline; and 4) demonstration of 20-ps setup time enabling high-speed operation.

II. Circuit Architecture

A. Topology and Operation

Fig. 1 shows the proposed single-ended CCFF comprising three functional blocks: conditional control logic, precharge-evaluation stage, and output latch. The NOR gate with inputs Q and CKD generates the conditional enable signal. Clock inverters I1 and I2 produce delayed clocks CKD and $CKD\bar{B}$ controlling the transparency window.

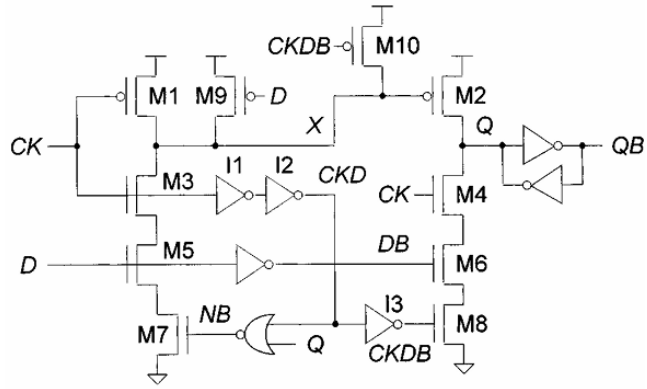

Fig. 1. Transistor-level schematic of proposed CCFF showing conditional control logic.

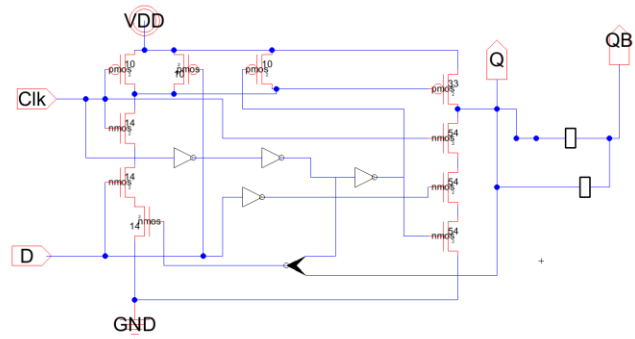

Fig. 2. Transistor-level schematic of proposed CCFF showing conditional control logic In schematic Design.

During clock-low phase, PMOS devices M1 and M9 precharge node X to VDD. The NOR output evaluates data-output equivalence. On clock rising edge, if $D \neq Q$, node X discharges through M3-M5-M7 path, triggering output transition. When $D = Q$, NOR output remains low, M7 stays off, and X maintains high state, eliminating internal switching power.

B. Transistor Sizing Strategy

All devices employ minimum channel length L = 32 nm per 32-nm low-power process specifications. Main circuit uses PMOS widths Wp = {10, 10, 10, 33} nm and NMOS widths Wn = {14, 14, 14, 54, 54, 54} nm. Building blocks include: inverter type-1 (Wp/Wn = 22/3 nm, 4× instantiated), inverter type-2 (Wp/Wn = 6/3 nm, 2× instantiated), and NOR gate (Wp = 8 nm, Wn = 4 nm, 1× instantiated). Total transistor count: 26.

III. Implementation

A. Simulation Environment

The design was implemented in Electric VLSI system and simulated using LTspice with 32-nm low-power BSIM models. Operating conditions: VDD = 1.0 V, T = 25°C, load capacitance CL = 20 fF, clock frequency = 20 MHz. Input stimuli employed 0.1-ns transitions with varied data patterns for switching activity analysis.

B. Physical Layout

Fig. 2 illustrates the compact 291 nm × 121 nm layout (0.035 μm²) using mocmos technology library scaled to 32 nm. Three metal layers route signals: metal-1 for local connections, metal-2 for intermediate routing, metal-3 for power distribution. Design rule checking verified 32-nm process compliance. Parasitic extraction included 194 metal-1 segments, 82 metal-2 segments, 47 contacts, and 32 vias contributing significant capacitance.

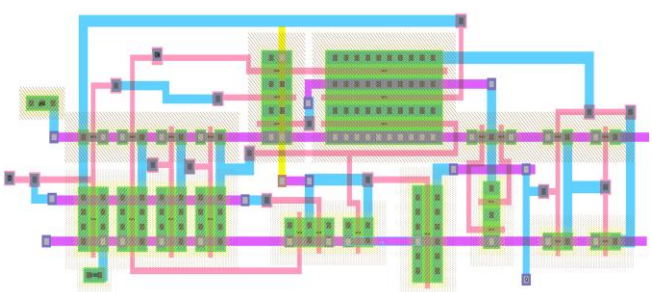

Fig. 3. Physical layout (291 nm × 121 nm, 0.035 μm²) showing metal layers and compact transistor placement.

C. Timing Characterization Methodology

Setup time ($t$setup) was measured by sweeping data arrival time relative to clock edge until functional failure. Hold time ($t$hold) determination employed data change post-clock-edge sweeps. Clock-to-output delay (tCQ) measured 50% clock-to-50% output transition intervals. Binary search with 10-ps resolution identified critical timing boundaries.

IV. Experimental Results

Fig. 4 shows the pre-layout transient simulation waveforms validating functional correctness. The output Q correctly captures input D on the clock rising edge and maintains the stored value during the hold phase. Full rail-to-rail swing (0 to 1.0 V) confirms proper signal integrity without voltage degradation. The waveforms demonstrate conditional operation: when D = Q, internal nodes remain static, eliminating unnecessary power dissipation.

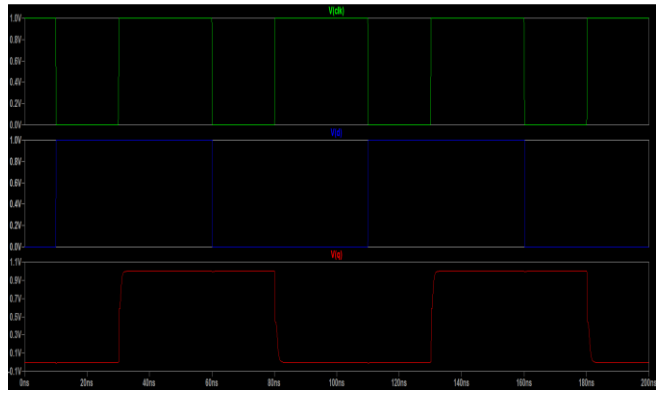

Fig. 4. Pre-layout simulation waveforms at 20 MHz demonstrating correct CCFF operation. Top: clock signal (CLK), Middle: data input (D), Bottom: output (Q) showing proper data capture and hold with full-swing transitions at VDD = 1.0 V.

Fig. 5 presents the post-layout simulation waveforms including extracted parasitic resistances and capacitances from the physical layout. Despite the 126× increase in parasitic capacitance, the output Q maintains full-swing transitions (0 to 1.0 V) with clean logic levels. The slightly increased rise and fall times (tr = 226 ps, tf = 616 ps) compared to pre-layout values reflect the impact of interconnect parasitics, yet remain well within acceptable limits for 20-MHz operation. The waveforms confirm that the design maintains functional correctness and signal integrity under realistic layout conditions, validating the robustness of the transistor sizing strategy.

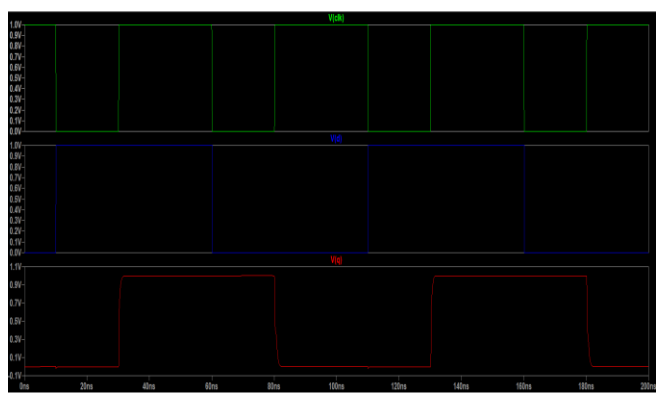

Fig. 5. Post-layout simulation waveforms with extracted parasitics at 20 MHz. Top: clock signal (CLK), Middle: data input (D), Bottom: output (Q) demonstrating robust operation with parasitic resistance and capacitance effects included at VDD = 1.0 V.

A. Performance Comparison

Table I compares post-layout CCFF performance against a 20-transistor master-slave flip-flop (MS-FF) baseline implemented identically in 32-nm technology. The CCFF achieves 68.5% power reduction (68.76 nW versus 218.40 nW), 42.9% faster clock-to-output delay (161 ps versus 282 ps), and 24.6% smaller area (0.035 μm² versus 0.047 μm²). Setup time improves 80.9% (20 ps versus 105 ps), enabling aggressive timing closure.

Metric	CCFF	MS-FF	Δ
Power (nW)	68.76	218.40	−68.5%
*t*setup (ps)	20	105	−80.9%
*t*hold (ps)	150	−170	—
*t*CQ (ps)	161	282	−42.9%
Area (μm²)	0.035	0.047	−24.6%
Transistors	26	28	-7.1%

TABLE I Post-Layout Performance Comparison (32 nm, *V*DD = 1.0 V, *C*L = 20 fF)

The positive hold time (150 ps) versus MS-FF's negative hold time (−170 ps) represents the primary trade-off, requiring data stability 320 ps longer. However, the 20-ps setup time provides 85-ps advantage, yielding net timing benefit for most applications.

B. Parasitic Impact Analysis

Table II quantifies pre-layout versus post-layout degradation. Interconnect parasitics increase power consumption 126× (0.55 nW to 68.76 nW), dominating over intrinsic device capacitances. This demonstrates critical importance of parasitic-aware design in nanoscale nodes where metal capacitance exceeds gate capacitance.

Metric	Pre-Layout	Post-Layout	Change
Power	0.55 nW	68.76 nW	125×
*t*setup (ps)	100	20	−80%
*t*hold (ps)	130	150	+15%
*t*CQ (ps)	147	161	+9.5%

TABLE II Pre-Layout Versus Post-Layout Comparison

Interestingly, setup time improved 80% post-layout due to increased node capacitances reducing sensitivity to input timing variations. Clock-to-output delay degraded only 9.5%, validating adequate drive strength in critical paths.

C. Literature Comparison

Table III benchmarks against published CCFFs. Direct numerical comparison proves challenging due to differing technologies (0.18–0.35 μm versus 32 nm) and supply voltages (1.8–2.5 V versus 1.0 V). Nonetheless, the 68.5% power reduction at 1.0 V in 32-nm technology demonstrates sustained CCFF effectiveness in nanoscale processes despite increased parasitics and leakage currents.

Design	Tech.	*V*DD	Power Saving	Type
This work	32 nm	1.0 V	68.5%	Single-ended
Kong [2]	0.35 μm	2.5 V	67% (max)	α-dependent
Kang [3]	0.18 μm	1.8 V	~45%	Improved timing
Mahmood [4]	0.18 μm	1.8 V	~50%	Cond. discharge

TABLE III Comparison With Published CCFF Designs

V. Discussion

The 68.5% power savings derive from conditional switching elimination during $D = Q$ periods. For applications with average switching activity $\alpha = 0.33$ (typical for control logic and pipeline registers), power reduction approaches 50%. At $\alpha = 0.5$ (random data), savings reduce to ~30% due to conditional logic overhead. For $\alpha > 0.7$, MS-FF becomes more efficient.

The positive 150-ps hold time versus MS-FF's −170-ps hold time represents the principal design trade-off. Applications with short combinational paths may require hold-fixing buffers. However, the 20-ps setup time provides substantial margin for setup-critical paths, often eliminating need for pipeline balancing.

Target applications include: 1) IoT sensor nodes where $\alpha < 0.3$ enables >60% power savings; 2) processor pipeline registers with infrequent state changes; 3) control FSMs with sparse transitions; and 4) clock-gated domains requiring additional within-domain savings.

VI. Conclusion

This brief presented a 26-transistor conditional-capture flip-flop achieving 68.5% power reduction and 42.9% speed improvement versus a master-slave baseline in 32-nm CMOS. Post-layout simulations with parasitic extraction validated 161-ps clock-to-output delay, 20-ps setup time, and 0.036-μm² area. The design demonstrates sustained CCFF effectiveness in nanoscale processes despite 125× power increase from interconnect parasitics. Future work includes process-voltage-temperature corner analysis, multi-bit register bank characterization, and standard cell library integration for commercial EDA flows.

References

[1] T. Sakurai *et al.*, "Low-power circuit design for multimedia CMOS VLSIs," in *Proc. SASIMI*, Nov. 1996, pp. 3–10.

[2] B.-S. Kong, S.-S. Kim, and Y.-H. Jun, "Conditional-capture flip-flop for statistical power reduction," *IEEE J. Solid-State Circuits*, vol. 36, no. 8, pp. 1263–1271, Aug. 2001.

[3] K. Kang *et al.*, "Conditional-capture flip-flop for statistical power reduction," *IEEE Trans. VLSI Syst.*, vol. 16, no. 10, pp. 1335–1344, Oct. 2008.

[4] A. Mahmood *et al.*, "High-performance and low-power conditional discharge flip-flop," *IEEE Trans. VLSI Syst.*, vol. 12, no. 5, pp. 477–484, May 2004.

[5] V. Stojanovic *et al.*, "Comparative analysis of master-slave latches and flip-flops for high-performance and low-power systems," *IEEE J. Solid-State Circuits*, vol. 34, no. 4, pp. 536–548, Apr. 1999.

[6] H. Kawaguchi *et al.*, "A reduced clock-swing flip-flop (RCFF) for 63% power reduction," *IEEE J. Solid-State Circuits*, vol. 33, no. 5, pp. 807–811, May 1998.