Design and Fabrication of a Paper Counting Machine

Project report submitted in partial fulfillment of the Requirements for the Award of the degree of

BACHELOR OF TECHNOLOGY
IN
ELECTRONICS AND COMMUNICATION ENGINEERING

Submitted by

M. CHIRANJEEVI
(23B85A0408)

P. AMARA BABU
(23B85A0414)

K. CHINNI
(22B81A0494)

N. NAGA TIRUMALA GOPALA KRISHNA
(23B85A0412)

G. LAKSHMAN
(23B85A0408)

Under the Guidance
Of
Dr . D. Ajay Kumar . ,M. Tech. Ph.D.
Associate Professor, Dept Of ECE

DEPARTMENT OF ELECTRONICS AND COMMUNICATION ENGINEERING
SIR C. R. REDDY COLLEGE OF ENGINEERING
ELURU – 534007, W. G. DIST., A.P.

Affiliated to JNTUK, Approved by AICTE, Accredited by NAAC &NBA

2025-2026

DEPARTMENT OF ELECTRONICS AND COMMUNICATION ENGINEERING

BONAFIDE CERTIFICATE

This is to certify that the project entitled **"Design and Fabrication of a Paper Counting Machine "** has been successfully completed by the following students during the academic **year 2025– 2026** as a partial fulfillment of the requirements for the award of the **Bachelor of Technology Degree in Electronics and Communication Engineering of Jawaharlal Nehru Technological University, Kakinada (JNTUK).**

Presented by Batch No 04:

M. CHIRANJEEVI
(22B81A04A5))

P. AMARA BABU
(23B85A0414)

K. CHINNI
(22B81A0494)

N. NAGA TIRUMALA GOPALA KRISHNA
(23B85A0412)

G. LAKSHMNAN
(23B85A0408)

Project Guide

Dr. D. Ajay Kumar., M. Tech. Ph.D.
Associate Professor
Department of ECE

Head of the Department

Dr. P H S Tejo Murthy., M.E, Ph. D
Professor & HOD, ECE
Department of ECE

EXTERNAL EXAMINER

DECLARATION

We hereby declare that the dissertation entitled **"Design and Fabrication of a Paper Counting Machine"**
Submitted for the B Tech degree is our original work and the dissertation has not formed the basis for the award of any degree, associateship, fellowship, or any other similar titles.

Batch Number: 04

M.CHIRANJEEVI	22B81A04A5
P. AMARA BABU	23B85A0414
K. CHINNI	22B81A0494
N.N T GOPALA KRISHNA	23B85A0412
G. LAKSHMAN	23B85A0408

Place: Eluru
Date :

ACKNOWLEDGEMENT

The successful completion of this project would not have been possible without the guidance, support, and encouragement of many individuals and institutions. We would like to express our sincere gratitude to all those who helped us throughout the development of this project.

First and foremost, we express our heartfelt thanks to **Dr. K. Venkateswara Rao, Principal of Sir C. R. Reddy College of Engineering, Eluru**, for providing us with the opportunity and facilities required to carry out this project successfully.

We express our deep sense of gratitude to **Dr. P. H. S. Tejo Murthy, Head of the Department of Electronics and Communication Engineering,** for his valuable support, encouragement, and motivation throughout the course of this project.

We would like to express our sincere and special thanks to our Project Guide, **Dr. D. Ajay Kumar., M. Tech. Ph.D.** Associate Professor, **Department of Electronics and Communication Engineering,** for his constant guidance, valuable suggestions, encouragement, and continuous support throughout the development of this project.

We also extend our sincere thanks to all the faculty members of the **Department of Electronics and Communication Engineering** for their encouragement and support during the course of our project work.

We are grateful to the laboratory staff and the central library of our college for providing the necessary facilities, technical support, and reference materials required to complete this project successfully

Presented by Batch 04:

M.CHIRANJEEVI	22B81A04A5
P.AMARA BABU	23B85A0414
K.CHINNI	22B81A0494
N.N T GOPALA KRISHNA	23B85A0412
G.LAKSHMAN	23B85A0408

ABSTRACT

Manual counting of paper bundles in offices, educational institutions, banks, and reprography centres is a routine yet labour-intensive task that consumes significant time and effort. The process is highly dependent on human concentration and is therefore prone to errors such as miscounting, double counting, or skipping sheets. These inaccuracies can lead to operational inefficiencies, financial discrepancies, and delays in document handling. Although automated paper counting machines are available in the market, most of them are expensive, bulky, and specifically designed for high-speed industrial environments, making them unsuitable and unaffordable for small and medium-scale organizations. To address these limitations, this project presents the design and fabrication of a cost-effective, compact, and portable automated paper counting machine tailored for light and medium-scale applications. The proposed system integrates a roller-based mechanical feeding mechanism to ensure smooth and consistent sheet movement, an infrared (IR) sensor for reliable sheet detection, and an ESP32 (NodeMCU) microcontroller for real-time processing and control. As each sheet passes through the roller assembly, the IR sensor detects its presence and sends corresponding signals to the microcontroller. The ESP32 processes these signals, increments the count accurately, and updates the result on a display unit. In addition to basic counting functionality, the system incorporates a target count feature that allows users to predefine the required number of sheets using an input interface. Once the set count is reached, the microcontroller automatically stops the motor, preventing overcounting and ensuring precise batching. Visual and audible indicators further enhance user interaction and operational convenience. Experimental evaluation of the prototype demonstrates consistent sheet detection, stable mechanical operation, and accurate counting performance across different paper types. The developed system effectively reduces manual effort, minimizes human error, and significantly improves productivity in paper handling operations. By combining affordability, reliability, and ease of use, the proposed solution serves as a practical automation tool for institutions seeking efficient document management without high investment costs.

Key words: Paper counting machine, ESP32, NodeMCU, IR sensor, automation, sheet detection, LCD Display, Buzzer.

INDEX

S.NO	CONTENTS	PAGE NO
	ABSTRACT	i
	LIST OF ABBREVATIONS	iv
	LIST OF FIGURES	v-vi
	LIST OF TABLES	vii
CHAPTER 1	**INTRODUCTION** 1.1 Objective of the Project 1.2 Scope of the project 1.3 Organization of the Project	1-5
CHAPTER 2	**LITERATURE SURVEY** 2.1. Problem statement 2.2 Existing Automatic Paper Counting Machine 2.3 Need for Proposed system 2.4 Survey Table	6-12
CHAPTER 3	**METHODOLOGY** 3.1 Introduction to ESP32 3.2 Block Diagram 3.3 Flow Chart 3.4 Introduction to Input & Output Devices 3.4.1 IR Sensor 3.4.2 Matrix Keypad 3.4.3 OLED 3.4.4 DC Moter 3.4.5 Moter Driver module 3.4.6 Buzzer	13-27
CHAPTER 4	**HARDWARE IMPLEMENTATION** 4.1 Description of Hardware 4.2 Working Principle 4.3 Description of ESP32	28-30

CHAPTER 5	**SOFTWARE IMPLEMENTATION** 5.1 Arduino IDE 5.2 WOKWI	31-39
CHAPTER 6	**RESULTS AND DISCUSSIONS** 6.1 Output Photos 6.2 Components List 6.3 Circuit Connections	40-45
CHAPTER 7	**CONCLUSION & FUTURE SCOPE**	46-51
CHAPTER 8	**APPENDICES**	52-53
CHAPTER 9	**REFERENCES**	54-56

LIST OF ABBREVATIONS

1. ABS – Acrylonitrile Butadiene Styrene
2. AI – Artificial Intelligence
3. CPU – Central Processing Unit
4. DC – Direct Current
5. GPIO – General Purpose Input Output
6. HC-SR04 – Ultrasonic Sensor Module
7. I2C – Inter-Integrated Circuit
8. IDE – Integrated Development Environment
9. IEEE – Institute of Electrical and Electronics Engineers
10. IoT – Internet of Things
11. IR – Infrared
12. LCD – Liquid Crystal Display
13. LED – Light Emitting Diode
14. MCU – Microcontroller Unit
15. PCB – Printed Circuit Board
16. PWM – Pulse Width Modulation
17. R – Row
18. C – Column
19. RX – Receive
20. TX – Transmit
21. SCL – Serial Clock Line
22. UART-Universal Asynchronous Receiver Transmitter
23. SDA – Serial Data Line
24. SD – Secure Digital
25. TFT – Thin Film Transistor
26. USB – Universal Serial Bus
27. VCC – Supply Voltage
28. GND – Ground
29. Wi-Fi – Wireless Fidelity
30. ESP32 – Espressif 32-bit Microcontroller
31. NodeMCU – Open-Source Development Board based on ESP32
32. BZ – Buzzer
33. PWM – Pulse Width Modulation
34. V – Voltage
35. A-Ampe

LIST OF FIGURES

S.No	Fig Number	Figure Name	Page Number
01	Fig 1	Automatic Paper Counting Machine	03
02	Fig 2	Manually Counting the Papers	09
03	Fig 3	ESP32 DEV BOARD	14
04	Fig 3.1.1	Block Diagram of Automatic Paper Counting Machine	16
05	Fig 3.2.1	Flow Chart of Automatic Paper Counting Machine	19
06	Fig 3.4.1.1	Infrared(IR) Sensor	24
07	Fig 3.4.2.1	Matrix Keypad	25
08	Fig 3.4.3.1	OLED	26
09	Fig 3.4.4.1	DC Moter	26
10	Fig 3.4.5.1	Motor Driver Module	27
11	Fig 3.4.6.1	Buzzer	27
12	Fig 4.2.1	Automatic Paper Counting Machine	31
13	Fig 4.3.1	ESP32 Microcontroller Board	32
14	Fig 5.1.1	Arduino IDE for Hardware System	34
15	Fig 5.1.1a	Arduino IDE User Interface	35
16	Fig 5.1.1b	Proto type implementation During the testing process	38

S.No	Figure Number	Fig Name	Page Number
17	Fig 5.2.1	WOKWI tool for Testing Before Real Hardware System	39
18	Fig 6.1.1	Simulation Output From WOKWI Tool	43
19	Fig 6.1.1a	Simulation Output with buzzer and LED From WOKWI Tool	44
20	Fig 6.2.1	Circuit Diagram For both Hardware and Software	46

LIST OF TABLES

S.No	Table No	Table Name	Page No
01	2.4	Literature Survey	12
02	6.2.1	Components List	45

CHAPTER 1
INTRODUCTION

Introduction of the Project

Automation in document handling systems has gained significant importance over the past two decades due to the increasing demand for accuracy, speed, and efficiency in paper-based operations. Traditional manual paper counting methods, commonly used in offices, banks, educational institutions, and printing centres are time-consuming and prone to human error. Mechanical feeder-based automated systems were initially introduced to reduce manual intervention and improve reliability in sheet handling processes [1]. However, early systems were primarily focused on large-scale industrial applications.

With the advancement of sensing technologies, infrared (IR) and optical sensors began to be widely used for sheet detection and counting applications [2], [8], [9]. These sensing techniques improved accuracy and enabled real-time monitoring of sheet movement. Microcontroller-based control systems further enhanced automation by allowing precise counting, batching, and display functionalities [3], [10]. The integration of embedded systems into document handling applications significantly reduced system complexity while improving operational performance [15], [16].

Mechanical sheet feeding and separation mechanisms play a crucial role in ensuring accurate counting performance. Several researchers have emphasized the importance of roller optimization and separation techniques to prevent overlapping and double feeding issues [7], [18], [25]. Industrial paper counting and sorting machines have addressed high-speed operational challenges, but these systems are often expensive and designed for heavy-duty applications [12], [26].

Recent studies have explored hybrid sensing techniques and contactless detection methods to enhance reliability and reduce maintenance requirements [5], [19], [24]. High-speed optical detection systems have also been investigated to improve precision in industrial environments [11]. Additionally, the use of low-cost embedded automation systems has been proposed to make automation accessible for small-scale industries and institutions [13], [20].

The development of intelligent batching systems and portable embedded platforms has further expanded the scope of automation in document processing [21], [26]. Comparative studies between infrared and ultrasonic sensing techniques highlight the importance of selecting appropriate sensors based on application requirements [27]. Furthermore, advancements in ESP32-based embedded systems and IoT integration have enabled the design of compact, connected, and energy-efficient automation solutions [14], [26].

and control. The proposed system aims to provide an affordable automation solution while maintaining accuracy, reliability, and ease of operation.

In this work, a low-cost automated paper counting machine using an ESP32 microcontroller and infrared sensing technology is proposed. The system employs a roller-based sheet feeding mechanism and an IR sensor to detect each passing sheet. The ESP32 processes the sensor signals, updates the sheet count in real time, and displays the results on a digital display. Additionally, the system includes a target-count feature, which allows the user to preset the desired number of sheets and automatically stops the motor when the required count is reached.

Despite these advancements, there remains a need for a cost-effective, compact, and reliable paper counting solution suitable for light and medium-scale applications. Most commercial systems are industrial-grade and financially impractical for smaller organizations. Therefore, this project focuses on the design and fabrication of a portable automated paper counting machine that integrates a roller-based feeding mechanism, sensor-based sheet detection, and an ESP32 microcontroller for real-time processing

The proposed design focuses on simplicity, portability, and affordability, making it suitable for offices, academic institutions, printing centers, and small-scale paper handling industries. The integration of mechanical feeding and electronic sensing provides reliable sheet detection while minimizing human intervention. The overall system demonstrates how embedded automation technologies can be effectively utilized to improve efficiency and accuracy in paper handling operations. As shown in fig 1.

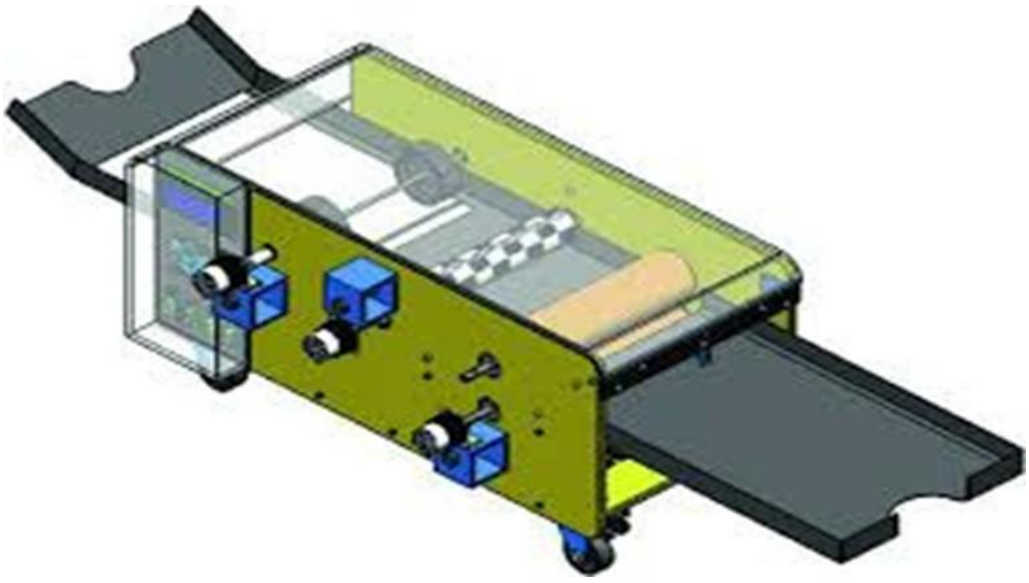

Fig 1: Automatic Paper Counting Machine

1.1 Objective of the Project

The main objective of this project is to design and develop a low-cost and portable automatic paper counting machine suitable for light and medium-scale applications. The system aims to automate the conventional manual paper counting process by utilizing IR sensing technology to achieve improved accuracy and minimize human errors. A microcontroller-based control system using NodeMCU is implemented to enable real-time sheet detection, counting, and display of results.

The project also focuses on designing a roller-based mechanical arrangement to ensure proper single-sheet separation for smooth and reliable operation. User-friendly features such as target count setting and automatic motor stopping after reaching the required number of sheets are incorporated to enhance usability and efficiency. Lightweight and durable materials like acrylic sheets, aluminum frames, and ABS rollers are used to ensure easy fabrication and portability.

Furthermore, the system is intended to increase productivity in offices, institutions, printing presses, and reprography centers by reducing manual effort and saving time. The performance of the prototype is evaluated under different operating conditions to ensure consistent counting accuracy across various paper types, while maintaining a cost-effective solution compared to industrial paper counting machines.

1.3 Scope of The Project

The scope of this project is focused on the design and development of a cost-effective, portable, and efficient automated paper counting machine suitable for light and medium-scale applications. The system is primarily intended for use in offices, educational institutions, printing presses, and reprography centers where manual paper counting is time-consuming and prone to errors. The developed prototype integrates a roller-based mechanical feeding mechanism, an IR sensor for sheet detection, and an ESP32 (NodeMCU) microcontroller for real-time processing and control.

The scope includes accurate single-sheet detection, real-time counting and display, and implementation of a target count feature with automatic motor stopping functionality. The system is designed to handle different types of paper under normal operating conditions while maintaining consistent counting accuracy. The project also covers performance evaluation of the prototype to verify reliability and operational efficiency.

1.4 Organization of the project

This project report is organized into several chapters to systematically present the design, development, and evaluation of the Automatic Paper Counting Machine.

Chapter 1 presents the introduction to the project, including the background, objectives, scope, and overall overview of the system. It explains the need for automation in paper counting and highlights the problem statement addressed by the proposed system.

Chapter 2 discusses the literature survey, which reviews existing paper counting systems and related technologies. It analyzes previously developed methods and identifies the limitations that motivated the proposed design.

Chapter 3 describes the existing system and the proposed system in detail. It explains the system architecture, block diagram, and overall design methodology adopted for the project.

Chapter 4 provides a detailed explanation of the hardware components and software implementation, including the ESP32 (NodeMCU), IR sensor, motor mechanism, and display unit. It also explains the working principle of the system.

Chapter 5 presents the experimental results, performance evaluation, and analysis of the developed prototype. It discusses accuracy, reliability, and system efficiency.

Finally, Chapter 6 concludes the project by summarizing the outcomes and suggesting possible future enhancements.

CHAPTER 2
LITERATURE SURVEY

LITERATURE SURVEY

Automation in paper handling and counting systems has been an active area of research for several decades. Early developments mainly focused on mechanical feeding mechanisms for reliable sheet separation. Smith and Brown [1] proposed a mechanical feeder-based automated paper counting system that emphasized accurate sheet separation using roller mechanisms. Although the system provided reliable feeding, it lacked advanced sensing and real-time monitoring features.

With the advancement of sensing technologies, researchers began integrating infrared and optical sensors for sheet detection. Kumar and Reddy [2] developed an infrared sensor-based paper counting machine that improved counting accuracy compared to purely mechanical systems. Similarly, Rahman et al. [9] explored infrared sensing methods for sheet detection, demonstrating enhanced reliability in moderate-speed applications. However, these systems were limited in scalability and user-interface capabilities.

Optical sensing techniques were further investigated by Lee and Kim [8] and Wang and Zhao [11], who proposed high-speed optical sheet detection methods for automated document processing systems. Their studies highlighted improved precision and faster response times, but the overall system cost increased due to advanced sensor technologies. Zhang et al. [3] introduced a microcontroller-controlled paper counting system integrating optical sensors with embedded control, enabling real-time monitoring and improved automation.

Mechanical design improvements were also explored by Yamamoto and Suzuki [7], who focused on sheet feeding and separation mechanisms for document processing systems. Patel and Singh [4] developed a stepper motor-based sheet counting machine to enhance feeding precision and speed control. These systems improved operational reliability but were primarily targeted toward industrial-scale applications.

Industrial automation in paper handling systems has been addressed by Das and Roy [6] and Tanaka [12], who discussed design challenges in large-scale industrial paper counting and sorting machines. Although these systems offered high-speed and large-volume processing capabilities, they were expensive and not suitable for small or medium-scale users.

In recent years, researchers have focused on low-cost embedded automation solutions. Banerjee and Chatterjee [10] presented a microcontroller-based document handling automation system aimed at improving efficiency in small-scale applications. Gupta and Sharma [5] proposed hybrid sensing techniques to develop cost-effective paper counting machines, combining multiple detection methods to enhance accuracy while reducing cost. Reddy and Narayanan [13] emphasized the importance of embedded automation systems for small-scale industries, highlighting affordability and portability as key requirements.

Furthermore, the integration of IoT-enabled microcontrollers such as ESP32 has opened new possibilities in embedded system design. Schwartz [14] discussed practical applications of ESP32 in embedded automation, demonstrating its capability for real-time control, processing, and connectivity.

From the reviewed literature, it is evident that although significant advancements have been made in mechanical feeding systems, optical and infrared sensing technologies, and microcontroller-based automation, most existing solutions are either industrial-scale and expensive or lack portability and cost-effectiveness. Therefore, there is a need for a compact, low-cost, and portable automated paper counting machine suitable for light and medium-scale applications. The proposed system addresses this research gap by integrating a roller-based feeding mechanism, IR sensing technology, and an ESP32 (NodeMCU) microcontroller to achieve accurate, reliable, and affordable automation.

2.1 Problem Statement

Manual counting of paper sheets in offices, banks, academic institutions, and printing presses is a repetitive and time-consuming task that is prone to human error. In bulk paper handling operations, manual counting often leads to miscalculations, fatigue, and reduced efficiency. Although industrial paper counting machines are available, they are generally expensive and primarily designed for large-scale operations, making them unsuitable for small and medium-scale users.

There is a need for a cost-effective, reliable, and user-friendly solution that can accurately count paper sheets while minimizing human intervention. The design and fabrication of a paper counting machine addresses this challenge by integrating mechanical precision with simple electronic control. The system is developed to automatically count sheets with high accuracy, ensuring reliable performance even during bulk operations.

By eliminating manual intervention, the machine reduces labor costs, minimizes human errors, and increases overall productivity. The project emphasizes affordability, portability, and ease of use, making it suitable for academic institutions, printing presses, offices, banks, and other paper- handling environments. Through careful design and fabrication, the proposed system demonstrates the practical application of engineering principles to develop an efficient and innovative solution for everyday operational problems As shown in fig 2

Fig 2: Manually Counting the Papers

2.2 Existing Automatic Paper Counting Machine

At present, paper counting in offices, educational institutions, banks, and printing centers is predominantly performed manually. In this method, sheets are separated and counted by hand, which makes the process slow and labor-intensive. Manual counting is highly prone to human errors such as miscounting, skipping sheets, or double counting, especially when handling large bundles of paper. As the number of sheets increases, maintaining accuracy becomes more difficult. Continuous manual counting also leads to fatigue, which further increases the probability of errors and reduces efficiency. The process consumes significant time and manpower, ultimately affecting overall productivity in paper-handling operations.

Although automated paper counting machines are available in the market, they are generally expensive and primarily designed for large-scale industrial applications. Most commercial machines are bulky, industrial-grade systems that are not suitable for small offices or institutions. Additionally, their high initial cost, maintenance expenses, and operational complexity make them impractical for small and medium-scale users.

Due to these limitations in both manual and existing commercial systems, there is a clear need for a low-cost, compact, portable, and reliable paper counting solution that can provide accurate results while remaining affordable and user-friendly.

2.3 Need for Proposed System

To overcome the limitations of the existing manual and industrial paper counting systems, a cost-effective and portable automated paper counting machine is proposed. The system is designed by integrating mechanical precision with embedded electronic control to achieve accurate and reliable sheet counting.

In the system design phase, key components such as the ESP32 (NodeMCU) microcontroller, infrared (IR) sensor, DC motor, motor driver, roller mechanism, and display unit are carefully selected to ensure efficient operation. The mechanical setup consists of a lightweight frame with a roller-based feeding mechanism that enables smooth single-sheet separation and continuous movement of paper sheets.

The electronic integration involves connecting the IR sensor to the ESP32 for real-time sheet detection, interfacing the DC motor with a motor driver for controlled rotation, and integrating a display unit to show the live count of detected sheets. As each sheet passes through the rollers, the IR sensor detects it and sends a signal to the microcontroller, which increments the counter accordingly.

The ESP32 is programmed to read sensor inputs, update the sheet count, display the value in real time, and automatically stop the motor when the preset target count is reached. This feature ensures precision and eliminates the need for manual supervision.

After system assembly, testing and calibration are performed using different types of paper to ensure accurate counting. Roller pressure and sensor sensitivity are adjusted to optimize performance and avoid multiple-sheet detection errors. Finally, the prototype is evaluated to verify its accuracy, reliability, portability, and consistent performance under normal operating conditions.

2.4 Survey Table

Ref No.	Author(s)	Year	Focus / Title Area	Methodology	Limitations
[1]	J. Smith & P. Brown	2005	Mechanical feeder-based paper counting	Roller-based sheet feeding mechanism	No advanced sensing or real-time control
[2]	R. Kumar & S. Reddy	2010	IR sensor-based paper counter	Infrared sensor detection system	Limited scalability and
[3]	L. Zhang et al.	2016	Microcontroller-controlled	Optical sensors with embedded	Higher cost due to optical
[4]	M. Patel & A. Singh	2018	Stepper motor sheet counter	Stepper motor-based feeding	Mainly suited for industrial
[5]	Gupta & Sharma	2023	Hybrid sensing techniques	Combination of multiple sensing	Increased integration
[6]	S. K. Das & P. Roy	2017	Industrial paper handling	Large-scale automated	Expensive and bulky
[7]	T. Yamamoto & K. Suzuki	2013	Mechanical sheet separation	Advanced mechanical	Designed for high-end
[8]	H. Lee & J. Kim	2015	Optical sheet detection	Optical sensing techniques	Higher implementation
[9]	Rahman et al.	2017	IR-based sheet detection	Infrared sensing methods	Moderate-speed limitation
[10]	D. Banerjee & A. Chatterjee	2018	Microcontroller automation	Embedded control system	Limited portability focus
[11]	F. Wang & L. Zhao	2019	High-speed optical detection	Advanced optical sensors	Cost-intensive system
[12]	K. Tanaka	2017	Industrial counting &	Industrial automation	Not suitable for small-scale use
[13]	P. S. Reddy & V. Narayanan	2019	Low-cost embedded	Embedded system	Not specific to paper counting
[14]	M. Schwartz	2021	ESP32 embedded	IoT-based microcontroller	Framework-oriented

CHAPTER 3

METHODOLOGY

METHODOLOGY

Introduction to ESP32

ESP32 is a low cost and high performance microcontroller developed by Espressif Systems. It is widely used in Internet of Things applications because it has built in Wi-Fi and Bluetooth connectivity. Due to its powerful features and low price, ESP32 has become one of the most popular development boards in embedded systems and IoT projects.

The ESP32 contains a dual core 32 bit processor based on the Tensilica LX6 architecture. It can operate at a clock frequency up to 240 MHz Compared to traditional microcontrollers like Arduino UNO, ESP32 provides much higher processing speed and better performance. It also supports multitasking using FreeRTOS, which allows multiple tasks to run simultaneously.

One of the major advantages of ESP32 is its built in wireless communication. It supports 802.11 b g n Wi-Fi standards and also provides Bluetooth Classic and Bluetooth Low Energy support. Because of this, no external Wi-Fi or Bluetooth modules are required. This reduces the overall cost and complexity of the system.

ESP32 provides a large number of General Purpose Input Output pins. These pins can be configured for digital input and output operations. It also supports analog to digital conversion with 12 bit resolution and digital to analog conversion through dedicated DAC channels. In addition, ESP32 supports communication protocols such as UART, SPI and I2C, making it easy to interface with sensors, displays and other peripheral devices.

The memory structure of ESP32 includes 520 KB of SRAM for data and program execution. Most development boards come with external flash memory, typically 4 MB, which is used to store the program code. The operating voltage of ESP32 is 3.3 volts, and it is designed to be power efficient, which makes it suitable for battery operated devices. As shown in fig 3.1.1

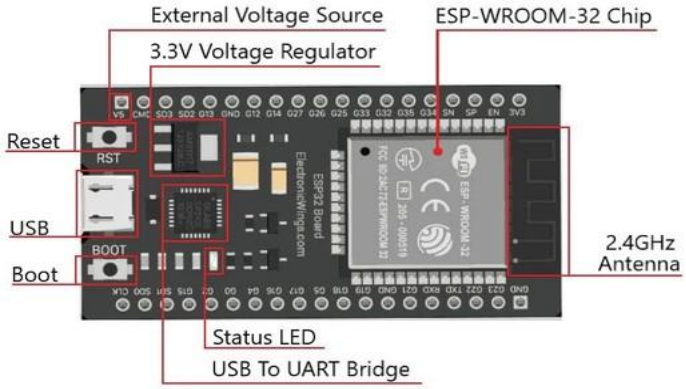

Fig 3 : ESP32 DEV BOARD

ESP32 also includes several advanced features such as hardware encryption, secure boot, real time clock and multiple timers. These features make it suitable for secure IoT applications and industrial systems.

ESP32 is commonly used in smart home automation, remote monitoring systems, robotics, wearable devices, wireless sensor networks and industrial automation projects. Because of its high performance, built in connectivity and flexible programming support, ESP32 is considered a powerful solution for modern embedded system design.

3.1 Block Diagram

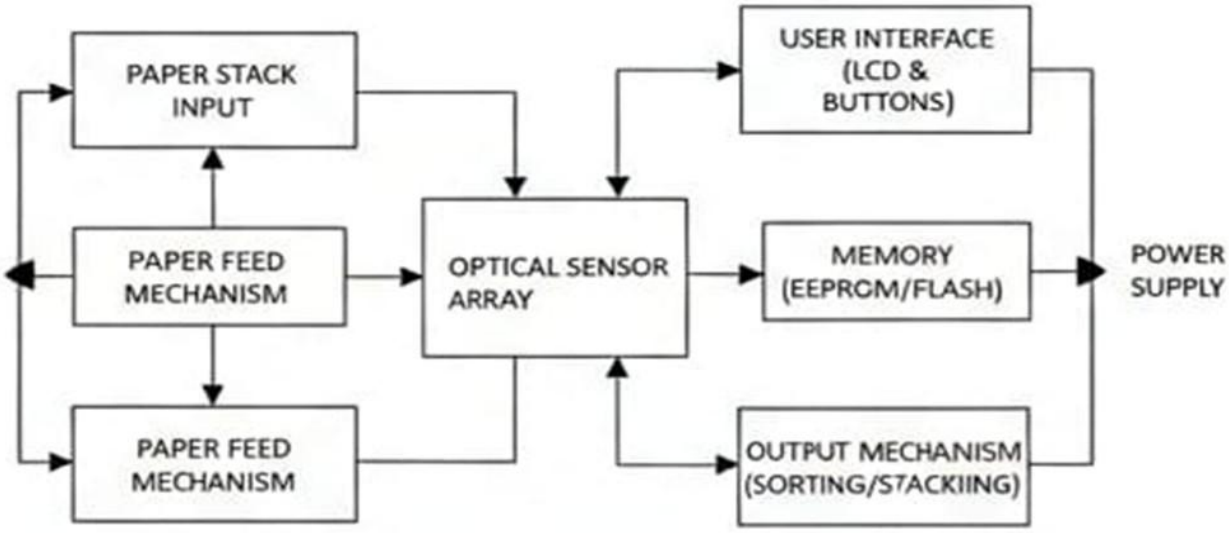

Fig 3.1.1: Block Diagram of Automatic Paper Counting Machine

1. Paper Stack Input

This block represents the initial stage of the system where a bundle of paper sheets is placed in the input tray. The sheets are aligned properly to ensure smooth feeding into the mechanism. The input section is designed to support A4-sized sheets and maintain proper positioning so that sheets enter the feeding system one by one without misalignment.

2. Paper Feed Mechanism

The paper feed mechanism consists of rollers connected to a DC motor that drives the movement of sheets from the input tray toward the sensing region. The rollers ensure controlled and continuous movement of paper sheets. Proper roller pressure and alignment are maintained to achieve single-sheet separation and prevent multiple sheets from passing simultaneously.

3. Optical Sensor Array (IR Sensor Unit)

The optical sensor array, implemented using an infrared (IR) sensor, is positioned along the sheet path to detect each sheet as it passes through the detection region. When a paper sheet interrupts the infrared beam between the transmitter and receiver, a digital signal is generated. This signal indicates the presence of a sheet and is forwarded to the microcontroller for processing.

4. ESP32 (NodeMCU) Processing Unit

The ESP32 (NodeMCU) microcontroller acts as the central processing unit of the system. It receives input signals from the IR sensor, processes them in real time, and increments the sheet counter accordingly. The microcontroller executes the programmed logic to compare the counted value with the preset target count and controls other system components such as the motor driver and display module.

5. Motor Driver Unit

The motor driver module acts as an interface between the ESP32 microcontroller and the DC motor. Since the microcontroller cannot directly supply sufficient current to drive the motor, the motor driver amplifies the control signals and enables proper motor operation. It allows automated start and stop control based on the counting logic implemented in the microcontroller.

6. User Interface (LCD and Buttons)

The user interface includes a display unit (LCD or 7-segment display) and control buttons. The display shows the real-time sheet count and the preset target value. The buttons allow the user to set the desired target count and control system operations. This feature improves usability and makes the system interactive and user-friendly.

7. Memory (EEPROM/Flash)

The memory unit stores program instructions and configuration data required for system operation. In the ESP32, internal flash memory stores the firmware, while temporary data such as counting variables are handled during runtime. Memory ensures stable and consistent execution of the counting algorithm.

8. ESP32 (NodeMCU) Processing Unit

The ESP32 (NodeMCU) microcontroller acts as the central processing unit of the system. It receives input signals from the IR sensor, processes them in real time, and increments the sheet counter accordingly. The microcontroller executes the programmed logic to compare the counted value with the preset target count and controls other system components such as the motor driver and display module.

9. ESP32 (NodeMCU) Processing Unit

The ESP32 (NodeMCU) microcontroller acts as the central processing unit of the system. It receives input signals from the IR sensor, processes them in real time, and increments the sheet counter accordingly. The microcontroller executes the programmed logic to compare the counted value with the preset target count and controls other system components such as the motor driver and display module.

10. Motor Driver Unit

The motor driver module acts as an interface between the ESP32 microcontroller and the DC motor. Since the microcontroller cannot directly supply sufficient current to drive the motor, the motor driver amplifies the control signals and enables proper motor operation. It allows automated start and stop control based on the counting logic implemented in the microcontroller.

11. User Interface (LCD and Buttons)

The user interface includes a display unit (LCD or 7-segment display) and control buttons. The display shows the real-time sheet count and the preset target value. The buttons allow the user to set the desired target count and control system operations. This feature improves usability and makes the system interactive and user-friendly.

12. Memory (EEPROM/Flash)

The memory unit stores program instructions and configuration data required for system operation. In the ESP32, internal flash memory stores the firmware, while temporary data such as counting variables are handled during runtime. Memory ensures stable and consistent execution of the counting algorithm.

13. Output Mechanism (Sorting/Stacking)

After passing through the sensing region, the counted sheets move to the output section where they are stacked neatly. The output mechanism ensures proper collection of counted sheets without disturbing the alignment. This maintains order and allows easy handling after the counting process is completed.

14. Power Supply

The power supply unit provides the required voltage and current to all system components including the ESP32, IR sensor, motor driver, DC motor, and display. Proper voltage regulation ensures safe and stable operation of the electronic components.As shown in fig 2

3.2 Flow Chart

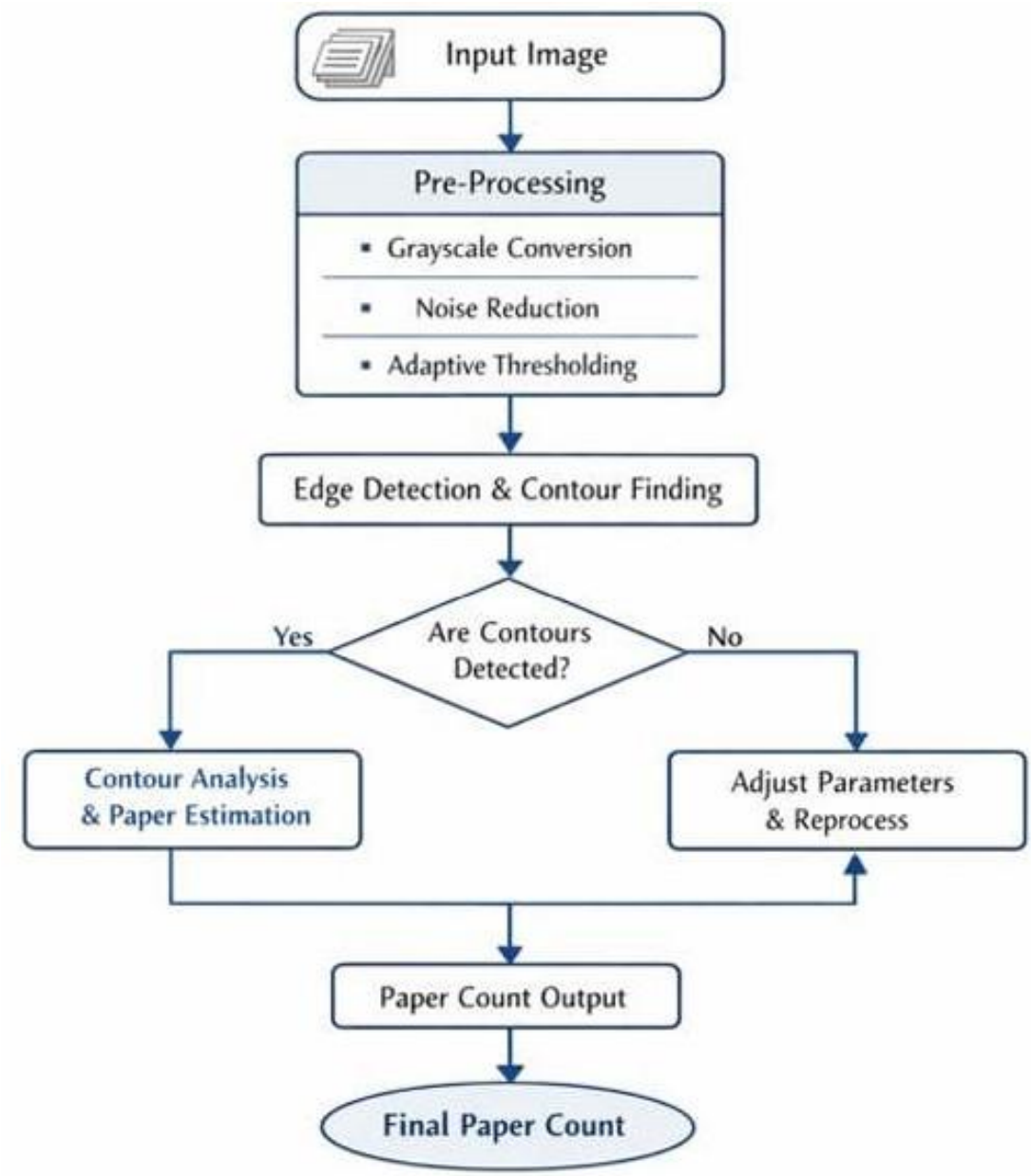

Fig 3.2.1 Flow Chart of Automatic Paper Counting Machine

1. Input Image

This block represents the initial stage of the system where the input data is provided for processing. In automated paper counting systems based on image processing, this stage captures the image of the paper stack using a camera or imaging device. The captured image serves as the raw data that will be analyzed to determine the number of sheets. The quality and resolution of the input image directly affect the accuracy of the counting process.

2. Pre-Processing

In this stage, the captured image is prepared for accurate analysis. Pre-processing typically includes grayscale conversion, noise reduction, and adaptive thresholding. Grayscale conversion simplifies the image by removing color information, making processing faster and more efficient. Noise reduction techniques help eliminate unwanted disturbances or background variations. Adaptive thresholding enhances contrast and distinguishes paper edges clearly from the background, improving detection reliability.

3. Edge Detection and Contour Finding

This block identifies the boundaries of individual sheets in the processed image. Edge detection algorithms highlight sharp intensity changes, which correspond to paper edges. After detecting edges, contour finding techniques are applied to identify closed boundaries around each sheet. This step is critical because accurate contour detection directly determines how precisely the system can estimate the number of papers present.

4. Are Contours Detected?

This is a decision-making stage in the flowchart. The system checks whether contours corresponding to paper sheets have been successfully detected. If contours are properly identified, the system proceeds to further analysis. If not, it indicates that the detection process was unsuccessful, possibly due to improper lighting or threshold settings, and adjustments are required before reprocessing.

5. Adjust Parameters and Reprocess

If contours are not detected correctly, the system modifies certain parameters such as threshold levels, contrast settings, or filtering strength. After adjusting these parameters, the image is reprocessed to improve detection accuracy. This feedback mechanism ensures that the system adapts to varying conditions and maintains reliable performance.

6. Contour Analysis and Paper Estimation

Once valid contours are detected, the system analyzes them to estimate the number of sheets. The size, shape, and count of contours are evaluated to determine how many distinct paper edges are present. Based on this analysis, the system calculates the estimated paper count with improved accuracy.

7. Paper Count Output

In this stage, the calculated sheet count is generated as an output. The system displays the counted value either on a digital display or through a software interface. This provides real-time information about the number of detected sheets.

8. Final Paper Count

This block represents the completion of the counting process. After verification and analysis, the system produces the final confirmed count of paper sheets. The final result ensures accuracy and reliability before concluding the operation.

As shown in fig 3.3

3.3 Introduction to Input & Output Devices

Input Devices

In the proposed paper counting machine, input devices are the components that provide signals or information to the microcontroller (ESP32) for processing.

IR Sensor

The Infrared (IR) sensor is the main input device used for detecting paper sheets. Whenever a paper passes between the IR transmitter and receiver, the IR beam is interrupted and a signal is generated. This signal is sent to the ESP32, which increments the count. The accuracy of the entire system mainly depends on this sensor.

Matrix Keypad

A matrix keypad is used to provide user input to the system. It allows the user to enter the required target count and control the operation of the machine. When a key is pressed, the corresponding signal is sent to the ESP32, which processes the input and executes the required action such as setting the target value or starting the counting process.

Output Devices:

Output devices are the components that respond according to the processed data from the microcontroller.

LCD / OLED Display

The display is used to show the real-time count of the paper sheets. It provides visual output to the user and displays the total number of sheets counted. It improves user interaction and makes the system easy to monitor.

DC Motor

The DC motor is responsible for rotating the rollers and feeding the paper sheets one by one. It acts as an output actuator controlled by the ESP32 through a motor driver.

Motor Driver Module

The motor driver acts as an interface between the ESP32 and the DC motor. It receives control signals from the ESP32 and supplies the required current to drive the motor properly.

Buzzer

The Buzzer is an audio signaling device used to generate sound alerts when an abnormal condition is detected. It converts electrical energy into sound energy and provides an immediate warning signal. Buzzers are commonly used in safety systems to notify users about faults or hazards. In this project, the buzzer is activated whenever the ultrasonic sensor detects an obstacle or track irregularity. This alert mechanism helps in providing quick warning to prevent possible railway accidents.

3.4.1 Infrared(IR) Sensor

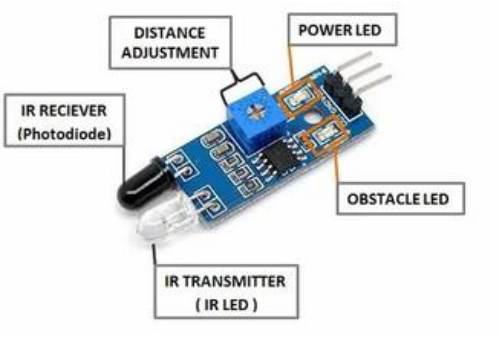

Fig 3.4.1.1 Infrared(IR) Sensor

The Infrared (IR) sensor is a key sensing component used in the proposed paper counting machine for detecting the presence of paper sheets. It works on the principle of infrared light transmission and reflection.

An IR sensor mainly consists of two parts: an IR transmitter (IR LED) and an IR receiver (photodiode or phototransistor). The transmitter continuously emits infrared light, which is invisible to the human eye. When no object is present between the transmitter and receiver, the infrared light is received normally.

When a paper sheet passes between them, the infrared beam is interrupted or reflected, depending on the sensor type. This interruption changes the output signal of the sensor. The change in signal is detected by the ESP32 microcontroller, which then increments the paper count by one As shown in fig 3.4.1.1.

3.4.2 Matrix Keypad

Fig 3.4.2.1 Matrix Keypad

The Matrix Keypad is an important input device used in the proposed paper counting machine to allow user interaction with the system. It enables the user to enter the desired target count and control the operation of the machine.

A matrix keypad typically consists of a set of push-button switches arranged in rows and columns (for example, 4×4 or 4×3 configuration). Instead of using a separate wire for each key, the keys are connected in a matrix format. This arrangement reduces the number of input/output pins required from the microcontroller. When a key is pressed, it connects a specific row and column, allowing the microcontroller to identify which key has been activated As shown in fig 3.4.2.1.

3.4.3 OLED

Fig 3.4.3.1 OLED

The OLED Display (Organic Light Emitting Diode Display) is a visual output device used to display text and graphical information. It operates by emitting light through organic compounds when an electric current is applied. OLED displays offer high contrast, low power consumption, and clear visibility even in low-light conditions. In this project, the OLED display is used to show real-time monitoring data such as obstacle detection status and distance measurements. It provides a clear and user-friendly interface for observing the system's operational condition As shown in fig 3.4.3.1.

3.4.4 DC Moter

Fig 3.4.4.1 DC Moter

The DC motor is an important output actuator used in the proposed paper counting machine. It is responsible for driving the roller mechanism that feeds paper sheets one by one through the sensing region. The controlled rotation of the motor ensures smooth and continuous movement of sheets during the counting process. As shown in fig 3.4.4.1.

3.4.5 Moter Driver

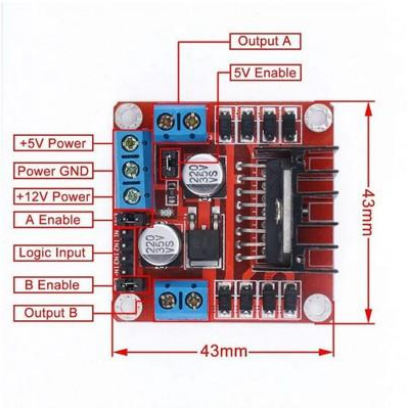

Fig 3.4.5.1 Motor Driver Module

The Motor Driver is an essential interface component used in the proposed paper counting machine to control the DC motor. Since the ESP32 microcontroller operates at low voltage and current levels, it cannot directly drive the DC motor. Therefore, a motor driver module is used to amplify the control signals from the microcontroller and supply sufficient current to operate the motor safely and efficiently As shown in fig 3.4.5.1.

3.4.6 Buzzer

Fig 3.4.6.1 Buzzer

The Buzzer is an audio signaling device used to generate sound alerts when an abnormal condition is detected. It converts electrical energy into sound energy and provides an immediate warning signal. Buzzers are commonly used in safety systems to notify users about faults or hazards. In this project, the buzzer is activated whenever the ultrasonic sensor detects an obstacle or track irregularity. This alert mechanism helps in providing quick warning to prevent possible railway accidents. As shown in fig 3.4.6.1.

CHAPTER 4

HARDWARE IMPLEMENTATION

HARDWARE IMPLEMENTATION

4.1 Description of Hardware

The hardware implementation of the proposed Automatic Paper Counting Machine involves the integration of mechanical and electronic components to achieve accurate and reliable sheet counting. The system is designed to be compact, cost-effective, and portable while ensuring smooth operation and precision.

The core component of the system is the ESP32 (NodeMCU) microcontroller, which acts as the central control unit. It receives input signals from the IR sensor, processes the data in real time, and controls the output devices such as the DC motor and LCD display. The ESP32 is selected due to its high processing capability, low power consumption, and ease of interfacing with peripheral devices.

The IR sensor is positioned along the paper feeding path to detect each sheet passing through the rollers. Whenever a sheet interrupts the infrared beam, a signal is generated and sent to the microcontroller. Proper alignment and sensitivity adjustment of the sensor are ensured to avoid false triggering and to maintain accurate counting.

The mechanical feeding mechanism consists of rollers mounted on a lightweight frame made of acrylic sheets and aluminum supports. The rollers are connected to a DC motor that drives the movement of paper sheets. The roller pressure is carefully adjusted to ensure single-sheet separation and prevent multiple sheets from passing simultaneously.

A motor driver module is used to interface the DC motor with the ESP32. Since the microcontroller cannot directly supply the required current to the motor, the motor driver amplifies the control signals and enables safe motor operation. The motor driver allows automated start and stop control based on the programmed logic.

A matrix keypad is integrated into the system to allow user input. It enables the user to enter the desired target count. The LCD display provides real-time feedback by displaying the current sheet count and the preset target value, improving user interaction and monitoring.

The entire system is powered by a regulated power supply unit that provides stable voltage to the ESP32, IR sensor, motor driver, and display module. Proper voltage regulation ensures safe and reliable operation of all components.

Thus, the hardware implementation successfully combines mechanical design and embedded electronics to develop a compact, efficient, and reliable automated paper counting system.

4.2 Working Principle of the Proposed System

The proposed Automatic Paper Counting Machine operates on the principle of infrared-based sheet detection combined with microcontroller-based control. The system integrates a mechanical feeding mechanism with electronic sensing and processing units to achieve accurate and automated paper counting.

Initially, a stack of paper sheets is placed in the input tray of the machine. When the system is powered on and the user enters the required target count through the matrix keypad, the ESP32 microcontroller initializes the counting process. Once the start command is given, the microcontroller activates the motor driver, which in turn drives the DC motor connected to the roller mechanism.

As the motor rotates, the rollers feed the paper sheets one by one through the sensing region. An IR sensor is positioned along this path to detect each sheet. When a sheet passes between the IR transmitter and receiver, the infrared beam is interrupted, generating a digital signal. This signal is sent to the ESP32, which increments the count by one for every detected sheet.

The updated count is continuously displayed on the LCD screen, allowing real-time monitoring of the counting process. The microcontroller continuously compares the current count with the preset target value entered by the user. Once the counted value reaches the target count, the ESP32 sends a stop signal to the motor driver, which immediately stops the DC motor. This prevents additional sheets from being fed and ensures precise counting.

After completion, the counted sheets are collected at the output section in an organized manner. The system ensures smooth operation, reduced human intervention, improved accuracy, and increased productivity.

Thus, the working principle of the proposed system combines mechanical sheet feeding, infrared detection, embedded processing, and automated motor control to provide an efficient and reliable paper counting solution.and also we implemente this project As shown in Fig 4.2.1

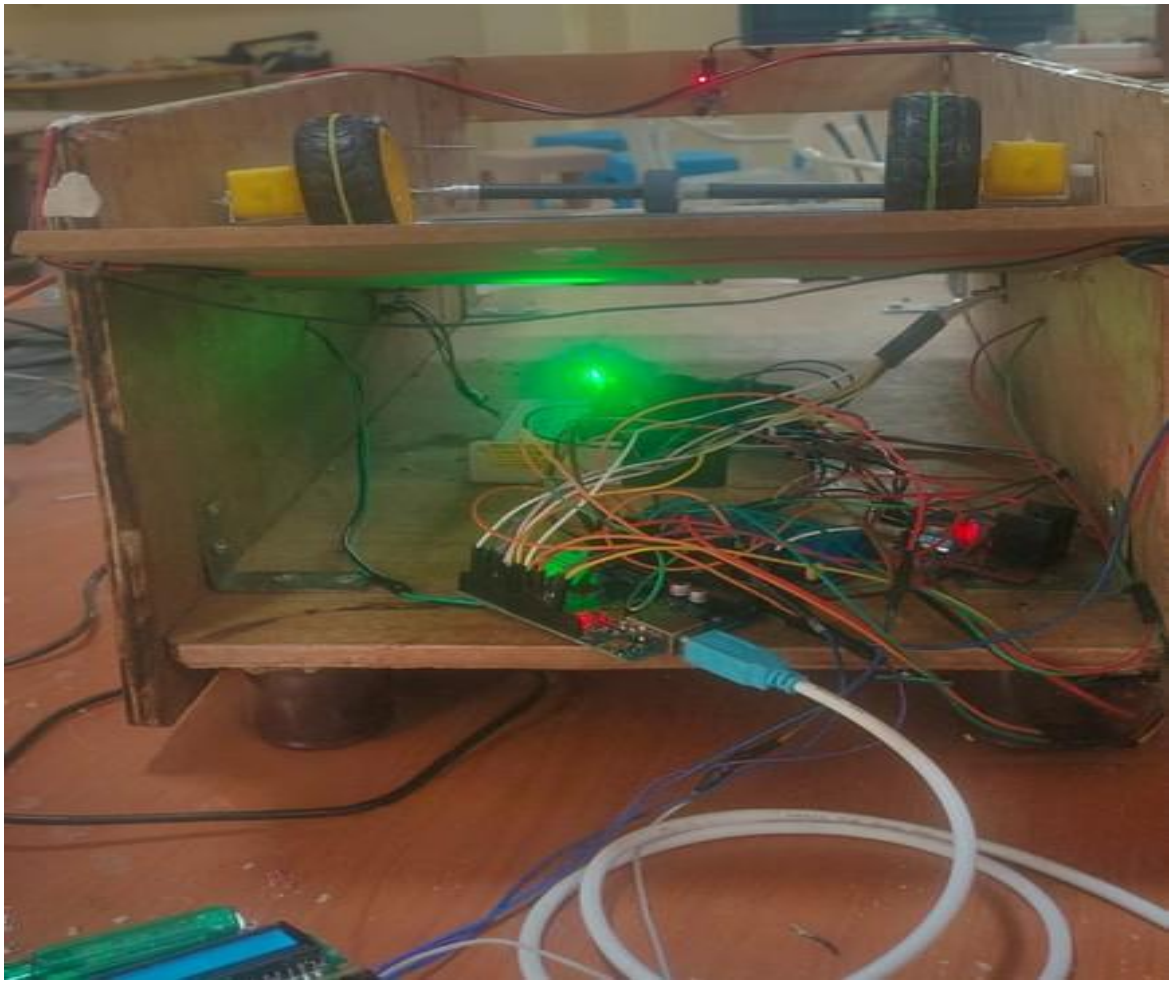

Fig 4.2.1 Automatic Paper Counting Machine

4.3 Discription of ESP32

The ESP32 is a powerful and low-cost microcontroller module developed by Espressif Systems, widely used in embedded systems and IoT applications. It is designed to provide high processing capability along with integrated wireless communication features such as Wi-Fi and Bluetooth. The ESP32 is based on a dual-core processor architecture, which allows efficient multitasking and faster execution of embedded programs. It operates at a clock frequency of up to 240 MHz, making it suitable for real-time monitoring and control applications.

One of the major advantages of the ESP32 is its large number of General Purpose Input and Output (GPIO) pins, which enable easy interfacing with various sensors, displays, and alert devices. It also includes built-in Analog-to-Digital Converters (ADC), Digital-to-Analog Converters (DAC), PWM channels, UART, SPI, and I2C communication protocols. These features make the ESP32 highly flexible for handling multiple peripheral devices simultaneously.

In this project, the ESP32 acts as the central control unit of the Advanced Railway Track Monitoring System. It receives distance measurements from the ultrasonic sensors, processes the input signals, and compares them with predefined threshold values to detect obstacles or track abnormalities. Based on the analysis, it activates output devices such as the buzzer and LED for alert generation. Additionally, the OLED display is interfaced with the ESP32 to present real-time monitoring data, ensuring clear system status visualization.

The ESP32 was selected for this project due to its high performance, low power consumption, and integrated communication capabilities. Even though full-scale VLSI hardware fabrication was not implemented, the control logic and system behavior were validated through simulation and software-based testing. Thus, the ESP32 plays a crucial role in ensuring efficient processing, reliable detection, and timely alert generation in the proposed railway safety system.As shown in fig 4.3.1

Fig 4.3.1 ESP32 Microcontroller Board

CHAPTER 5

SOFTWARE IMPLEMENTATION

SOFTWARE IMPLEMENTATION

5.1 Arduino IDE

The Arduino Integrated Development Environment (Arduino IDE) is an open-source software platform used for writing, compiling, and uploading code to microcontroller boards such as Arduino and ESP32. It provides a simple and user-friendly interface that allows developers, students, and researchers to develop embedded system applications efficiently. The Arduino IDE supports programming in C and C++ languages with simplified functions and built-in libraries that make hardware interfacing easier.

The IDE consists of a text editor for writing source code, a message area for compilation status, a console window for displaying output messages, and a toolbar with functions such as Verify, Upload, Save, and Serial Monitor. The Verify option checks the code for errors, while the Upload option compiles and transfers the program into the microcontroller memory. The Serial Monitor tool is particularly useful for debugging, as it allows real-time communication between the computer and the microcontroller through serial communication.

One of the major advantages of Arduino IDE is its extensive library support. It provides built-in libraries for handling sensors, displays, communication protocols (I2C, SPI, UART), and other peripheral devices. In addition, users can easily install third-party libraries to extend functionality. This makes the development process faster and reduces coding complexity.

Fig 5.1.1 Arduino IDE for Hardware System

Fig 5.1.1a Arduino IDE User Interface

In this project, the Arduino IDE was used to develop and test the control logic for the Advanced Railway Track Monitoring System. The program was written to interface the ultrasonic sensors, process the measured distance values, and control the buzzer, LED, and OLED display accordingly. The IDE was also used to monitor real-time sensor readings through the Serial Monitor for verification and debugging purposes. Through simulation and testing, the proper functioning of obstacle detection and alert generation was validated.

Although the system incorporates VLSI design principles at the conceptual level, the practical implementation and testing were carried out using Arduino IDE as the primary development environment. Thus, the Arduino IDE played a significant role in coding, debugging, testing, and validating the overall system performance in this project.

Program Used for This Hardware

```
#include <Wire.h>
#include <LiquidCrystal_I2C.h>
#include <Keypad.h>

// LCD Setup
LiquidCrystal_I2C lcd(0x27, 16, 2);

// Pin Definitions
const int irSensor = 15;      // IR sensor pin
const int motorPin1 = 26;     // Motor driver IN1
const int motorPin2 = 27;     // Motor driver IN2

// Counter Variables
int count = 0;
int targetCount = 0;
bool counting = false;

// Keypad Setup
const byte ROWS = 4;
const byte COLS = 4;

char keys[ROWS][COLS] = {
  {'1','2','3','A'},
  {'4','5','6','B'},
  {'7','8','9','C'},
  {'*','0','#','D'}
};

byte rowPins[ROWS] = {32, 33, 25, 14};
byte colPins[COLS] = {12, 13, 4, 16};

Keypad keypad = Keypad(makeKeymap(keys), rowPins, colPins, ROWS, COLS);

void setup() {
  pinMode(irSensor, INPUT);
  pinMode(motorPin1, OUTPUT);
  pinMode(motorPin2, OUTPUT);

  lcd.init();
  lcd.backlight();

  lcd.setCursor(0,0);
  lcd.print("Paper Counter");
  delay(2000);
  lcd.clear();
}

void loop() {

  char key = keypad.getKey();

  // Enter Target Count
  if (key >= '0' && key <= '9') {
    targetCount = targetCount * 10 + (key - '0');
    lcd.clear();
    lcd.print("Target: ");
    lcd.print(targetCount);
```

```
// Start Counting (Press A)
if (key == 'A') {
counting = true;
count = 0;
lcd.clear();
lcd.print("Counting...");

digitalWrite(motorPin1, HIGH);
digitalWrite(motorPin2, LOW);
}
// Reset (Press B)
if (key == 'B') {
counting = false;
count = 0;
targetCount = 0;
digitalWrite(motorPin1, LOW);
digitalWrite(motorPin2, LOW);
lcd.clear();
lcd.print("Reset Done");
delay(1000);
lcd.clear();
}
// IR Sensor Detection
if (counting == true) {
if (digitalRead(irSensor) == LOW) {
count++;
lcd.clear();
lcd.print("Count: ");
lcd.print(count);
delay(300); // Debounce delay
if (count >= targetCount) {
counting = false;
digitalWrite(motorPin1, LOW);
digitalWrite(motorPin2, LOW);
lcd.clear();
lcd.print("Target Reached");
delay(2000);
lcd.clear();
}
}
}
}
```

Hardware Prototype

Figure 5.1.1b: Proto type implementation During the testing process

A prototype of the proposed paper counting machine was constructed using the components described in the system implementation section. The system was tested using standard A4 paper sheets to evaluate its counting accuracy and operational stability.stacks of paper sheets were placed in the input tray and allowed to pass through the roller feeding mechanism. The IR sensor detected each sheet as it passed through the detection region, and the microcontroller updated the count displayed on the screen.

5.2 WOKWI Simulation Tool for Hardware

WOKWI is an online simulation platform used for developing and testing embedded systems projects virtually without requiring physical hardware. It supports microcontroller boards such as ESP32, Arduino, and other popular development platforms. WOKWI allows users to simulate sensors, displays, LEDs, buzzers, and various electronic components in a real-time virtual environment. This makes it highly useful for students and researchers who want to test their project logic before implementing it in hardware.

One of the main advantages of WOKWI is that it runs completely in a web browser, eliminating the need for software installation. Users can write and edit code directly within the platform and observe the output instantly through simulated components. It also provides features such as Serial Monitor, waveform visualization, and interactive debugging support. These features help in verifying system behavior and correcting logical errors efficiently.

In this project, WOKWI was used to simulate the Advanced Railway Track Monitoring System. The ESP32 microcontroller, ultrasonic sensors, OLED display, LED, and buzzer were virtually connected and tested within the WOKWI environment. The sensor inputs were simulated to verify obstacle detection logic, and the corresponding alert mechanisms were analyzed through output indicators. Graphical outputs and functional validation were observed to ensure correct system operation.

Since FPGA hardware was not available for physical implementation, WOKWI played a crucial role in validating the system design and verifying the working principles. Through simulation-based testing, the accuracy of obstacle detection and alert generation was confirmed. Thus, WOKWI served as an effective tool for simulation, debugging, and performance verification in the proposed railway safety monitoring system.

Fig 5.2.1 WOKWI tool for Testing Before Real Hardware System

Simulation Code for testing the Hardware

```
#include <Wire.h>
#include <LiquidCrystal_I2C.h>

// LCD Setup (Wokwi default 0x27)
LiquidCrystal_I2C lcd(0x27, 16, 2);

// Pin Definitions
#define IR_SENSOR 15
#define MOTOR_PIN 26

int count = 0;
int targetCount = 10;  // Fixed target for simulation
bool counting = false;

void setup() {
  pinMode(IR_SENSOR, INPUT_PULLUP);  // Pushbutton simulate
  pinMode(MOTOR_PIN, OUTPUT);

  lcd.init();
  lcd.backlight();

  lcd.setCursor(0,0);
  lcd.print("Paper Counter");
  delay(2000);
  lcd.clear();

  lcd.print("Target: ");
  lcd.print(targetCount);

  counting = true;
  digitalWrite(MOTOR_PIN, HIGH);  // Motor ON
}
```

```
void loop() {
 if (counting) {
 if (digitalRead(IR_SENSOR) == LOW) { // Button pressed
 count++;
 lcd.clear();
 lcd.print("Count: ");
 lcd.print(count);
 delay(300); // Debounce
 if (count >= targetCount) {
 counting = false;
 digitalWrite(MOTOR_PIN, LOW); // Motor OFF
 lcd.clear();
 lcd.print("Target Reached");
 }
 }
 }
}
```

CHAPTER 6
RESULTS AND DISCUSSIONS

RESULTS AND DISCUSSIONS

6.1 Simulation Output From WOKWI Tool

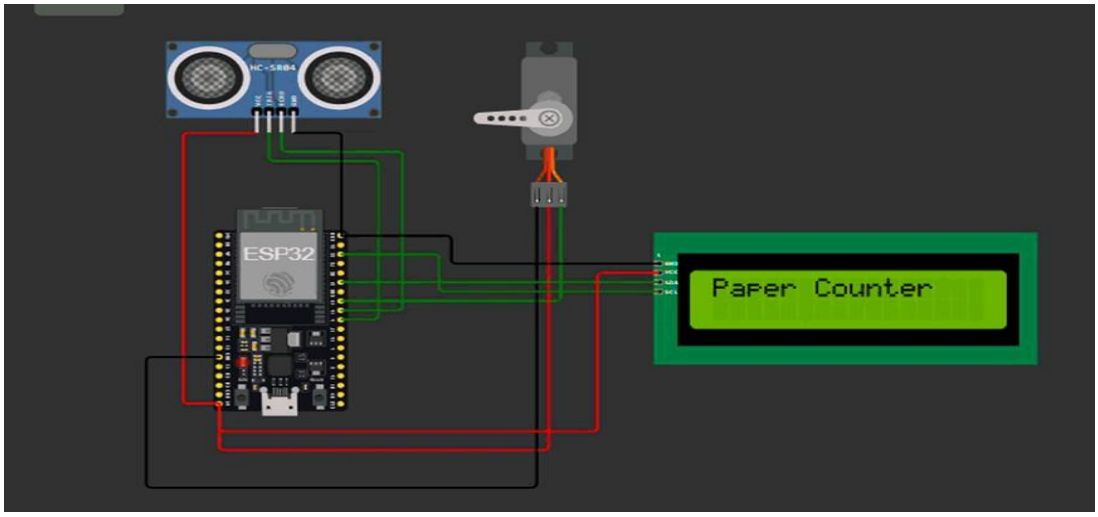

Fig 6.1.1 Simulation Output From WOKWI Tool

In this system, the ESP32 microcontroller functions as the main control unit, coordinating the operation of the ultrasonic sensor and LCD display. It receives distance measurement data from the ultrasonic sensor, processes the information, and displays the corresponding output on the LCD screen. The ESP32 is chosen due to its high processing capability, reliable performance, and sufficient GPIO pins for sensor interfacing. The ultrasonic sensor (such as HC-SR04) operates on the principle of sound wave reflection. It consists of a transmitter (Trig) and receiver (Echo). When the ESP32 sends a short trigger pulse to the Trig pin, the sensor emits an ultrasonic sound wave. This wave travels through the air and reflects back when it encounters an object, such as a sheet of paper. The reflected wave is received by the Echo pin. The time taken for the echo signal to return is measured by the ESP32.

Based on the time duration between transmission and reception, the ESP32 calculates the distance of the object using the speed of sound formula. When a paper sheet passes in front of the sensor within a predefined distance range, the microcontroller interprets it as a detection event and increments the counter value. This method enables non-contact detection, reducing mechanical wear and improving durability.

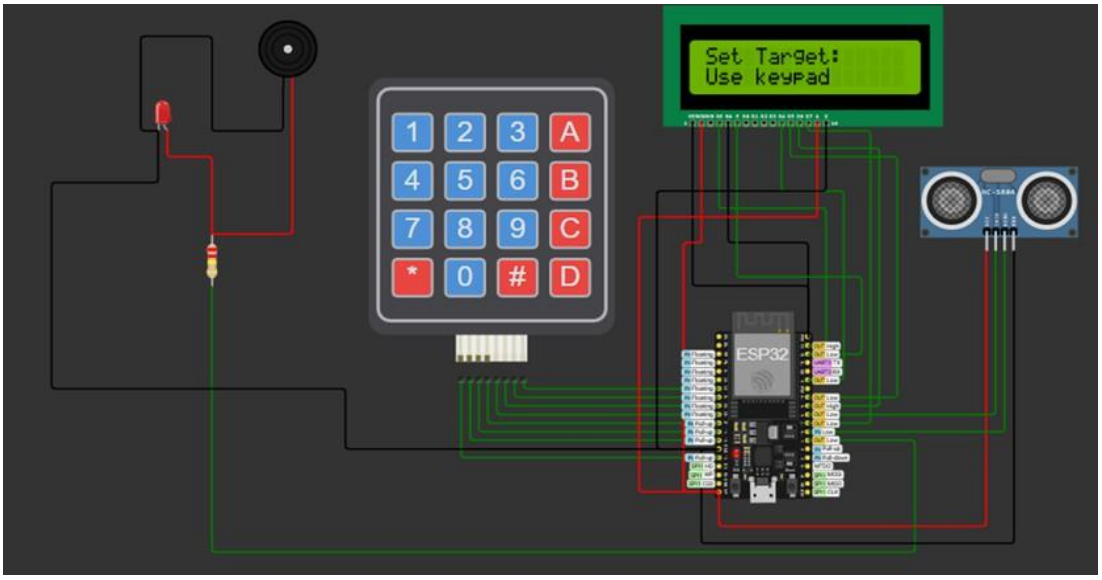

Fig 6.1.1a Simulation Output with buzzer and LED From WOKWI Tool

In the proposed paper counting system, the ESP32 microcontroller acts as the central control unit that manages sensing, processing, and output indication. It receives input signals from the ultrasonic sensor, processes the detection data, updates the count value, and controls the LCD display, buzzer, and LED indicators accordingly. The ESP32 is selected due to its fast processing speed, reliable performance, and sufficient GPIO pins for multiple device interfacing.

The ultrasonic sensor operates based on the principle of sound wave reflection. When the ESP32 sends a short trigger pulse to the sensor, it emits ultrasonic sound waves. These waves travel through the air and reflect back when they hit a paper sheet passing in front of the sensor. The echo signal is received by the sensor and sent back to the ESP32. By calculating the time difference between transmission and reception, the ESP32 determines the presence of a sheet. Whenever a sheet is detected within the predefined distance range, the microcontroller increments the internal counter. The 16×2 I2C LCD is used to display real-time system information. It is connected to the ESP32 using the I2C communication protocol through SDA and SCL lines. The display shows the current count, target count, and operational messages such as “Counting in Progress” and “Target Reached.” This provides clear visual feedback to the user during operation.

An LED indicator is included to show the system status. When the machine is actively counting, the LED glows, indicating that the system is running. Once the target count is achieved, the LED can either turn off or change its state depending on the programmed logic. This gives a quick visual confirmation of the machine’s operational condition.

6.1 Components Used in this Project

S.No	Components Name
01	Arduino Uno (Microcontroller Board)
02	IR Sensor (Infrared Sensor Module)
03	DC Motor – paper feeding
04	Motor Driver Module (L298N / L293D)
05	Buzzer – counting complete
06	LCD Display (16x2) – paper count display
07	Power Supply (5V / 12V Adapter or Battery)
08	Breadboard – circuit connections
09	Jumper Wires – connecting the components
10	Switch – ON/OFF control
11	Mechanical Frame / Roller Setup

6.2.1 List of Components

6.2 Circuit Connections

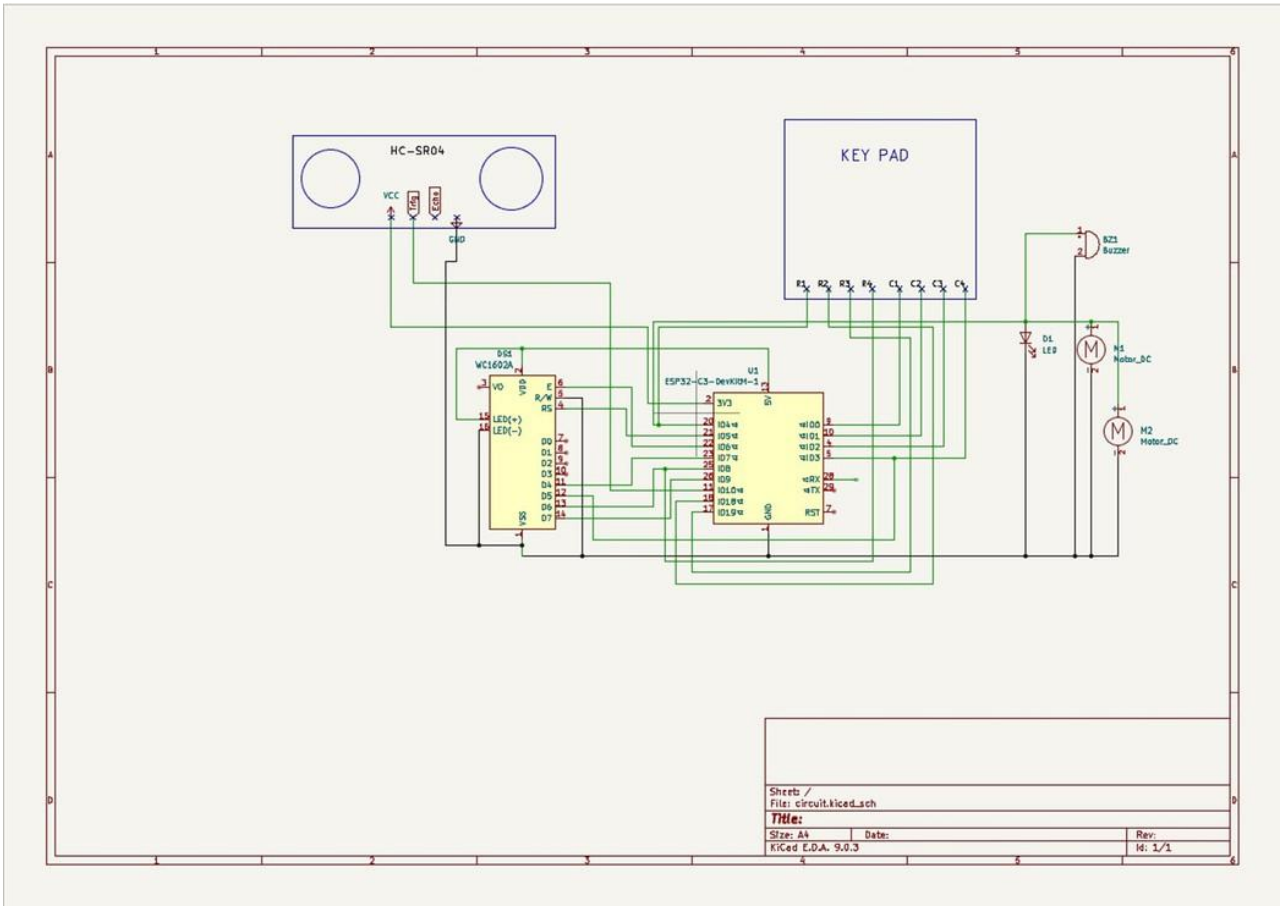

Fig 6.2.1 Circuit Diagram For both Hardware and Software

The above circuit diagram represents the complete hardware implementation of the automated paper counting machine using ESP32 as the main controller. The system integrates an ultrasonic sensor (HC-SR04), 16×2 LCD display, matrix keypad, buzzer, LED indicator, and DC motor to perform automated sheet counting.

At the center of the system is the ESP32-C3 Devkit module, which acts as the processing and control unit. All input and output devices are interfaced with the ESP32 through its GPIO pins. The ESP32 receives signals from the ultrasonic sensor and keypad, processes the data, and controls the LCD display, motor, buzzer, and LED accordingly.

The HC-SR04 ultrasonic sensor is connected using four pins: VCC, GND, Trig, and Echo. The VCC pin is connected to the 5V supply, and GND is connected to the common ground. The Trig pin is connected to a digital output pin of the ESP32, while the Echo pin is connected to a digital input pin. When triggered, the sensor emits ultrasonic waves and detects the reflected signal from the passing sheet. The ESP32 measures the echo time and identifies sheet presence based on distance calculation.

The 16×2 LCD (WC1602A) is connected in parallel mode. The control pins RS and E are connected to digital GPIO pins of the ESP32. The data pins (D0–D7 or D4–D7 depending on configuration) are also connected to the microcontroller. The LCD displays the current sheet count, target count, and system status messages. The LED backlight pins (LED+ and LED−) are powered to provide clear visibility of the display.

The matrix keypad is interfaced using row and column connections. The row pins (R1–R4) and column pins (C1–C4) are connected to multiple GPIO pins of the ESP32. The keypad allows the user to enter the target sheet count and control system functions such as start and reset. The ESP32 scans the keypad matrix to detect key presses.

A buzzer (BZ1) is connected to one of the digital output pins of the ESP32. It provides audible feedback when a sheet is detected or when the target count is reached. The LED (D1) acts as a visual indicator, showing system status such as counting in progress or completion.

The DC motor (M2) is used to drive the roller mechanism for sheet feeding. It is controlled through a motor control arrangement (direct or driver-based connection). When the counting process starts, the ESP32 activates the motor to rotate the rollers. Once the target count is reached, the motor is automatically stopped.

All components share a common ground connection to ensure stable operation. The power supply section provides regulated voltage to the ESP32, sensor, LCD, and other peripheral devices.

Overall, the circuit diagram illustrates the integration of sensing, processing, user interface, and actuation components into a single embedded system. The ESP32 coordinates all operations, enabling accurate, automated, and user-friendly paper counting functionality

CHAPTER 7

CONCLUSION FUTURE SCOPE

CONCLUSION

The design and fabrication of the proposed Paper Counting Machine successfully demonstrate the practical implementation of embedded systems and automation techniques in solving real-world problems. Manual paper counting, which is widely practiced in offices, institutions, banks, and printing centers, is time-consuming, labor-intensive, and prone to human error. The developed system effectively addresses these limitations by introducing an automated, accurate, and cost-effective solution.

The integration of the ESP32 microcontroller with ultrasonic sensing technology ensures reliable and contactless sheet detection. By measuring distance variations and processing signals in real time, the system accurately counts each sheet passing through the sensing area. The use of a microcontroller-based control system improves precision while reducing dependency on human intervention. This significantly minimizes errors such as double counting or skipped sheets, which are common in manual methods.

The inclusion of a roller-based mechanical feeding mechanism enhances smooth sheet movement and ensures consistent separation during operation. Proper calibration of sensor positioning and roller alignment plays a crucial role in achieving stable and repeatable results. The combination of mechanical design and electronic control highlights the interdisciplinary application of electronics, embedded systems, and mechanical engineering principles.

The system also incorporates user-friendly features such as a matrix keypad for entering the target count, a real-time LCD display for monitoring progress, and LED and buzzer indicators for visual and audible feedback. The automatic stopping mechanism after reaching the predefined target count improves batching accuracy and prevents overcounting. These features collectively enhance usability and operational efficiency.

One of the major achievements of this project is its cost-effectiveness and compact design. Unlike industrial paper counting machines that are expensive and bulky, the developed prototype uses affordable and easily available components. This makes it highly suitable for small and medium-scale applications where budget constraints exist. Additionally, the system consumes relatively low power and requires minimal maintenance due to non-contact sensing.

Overall, the project validates that a simple yet well-designed embedded system can provide an efficient alternative to traditional manual processes. The prototype operates reliably under controlled conditions and demonstrates consistent performance across multiple test trials. The successful completion of this project confirms the feasibility of developing low-cost automation systems tailored to specific application requirements.

Overall, the project validates that a simple yet well-designed embedded system can provide an efficient alternative to traditional manual processes. The prototype operates reliably under controlled conditions and demonstrates consistent performance across multiple test trials. The successful completion of this project confirms the feasibility of developing low-cost automation systems tailored to specific application requirements. The experimental evaluation of the system confirms that the proposed paper counting machine achieves consistent and dependable performance. During testing with different paper types and varying bundle sizes, the system maintained stable detection and accurate counting results. Minor calibration adjustments in sensor positioning and roller pressure ensured optimal performance, proving that the system is adaptable to practical working conditions. This demonstrates the robustness and reliability of the developed prototype.

Another important outcome of this project is the enhancement of productivity and operational efficiency. Organizations can complete document handling tasks more quickly, improving workflow management and reducing workload on staff members. The automation also ensures uniformity in counting, which is essential in environments where precision is critical.

The project further highlights the importance of embedded system design in industrial and semi-industrial applications. Through proper integration of sensing elements, control units, and output interfaces, even simple components can be transformed into a powerful automated system. The use of the ESP32 microcontroller demonstrates how modern microcontroller platforms can simplify system design while providing high performance and flexibility.

In addition to its present functionality, the system has the potential for further expansion. Future improvements may include integration of wireless communication modules for remote monitoring, incorporation of data logging features, addition of higher-speed feeding mechanisms, and implementation of advanced filtering algorithms for even greater accuracy. Such enhancements can transform the prototype into a more sophisticated commercial product.

In conclusion, the proposed paper counting machine successfully achieves its objective of developing a low-cost, portable, and reliable automated counting system. It effectively replaces manual counting methods, reduces errors, and improves productivity. The project serves as a practical example of how engineering concepts can be applied to create innovative and efficient solutions for everyday operational challenges. The successful implementation of this system confirms its suitability for real-world applications and establishes a strong foundation for future advancements in low-cost automation technology.

FUTURE SCOPE

Although the proposed paper counting machine performs efficiently under controlled conditions, there is significant scope for further enhancement and technological advancement. The current system is designed for light and medium-scale applications; however, with certain modifications, it can be upgraded to handle high-speed industrial operations. By integrating a more powerful motor and improved roller mechanisms, the machine can be adapted for handling larger volumes of paper at higher speeds while maintaining accuracy.

One potential improvement is the integration of wireless communication features such as Wi-Fi or Bluetooth connectivity. Since the ESP32 already supports wireless capabilities, the system can be enhanced to transmit counting data to a remote server or mobile application. This would enable real-time monitoring, data storage, and performance tracking, making the system more suitable for modern smart office environments.

Another area of improvement lies in data logging and record management. By incorporating an SD card module or cloud-based storage system, the machine can maintain daily counting records. This feature would be particularly useful in banks, printing presses, and examination centers where documentation and accountability are important.

The system can also be upgraded with advanced sensing technologies. For example, optical or laser-based sensors may be used for higher precision detection in high-speed applications. Additionally, implementing filtering algorithms in the software can further reduce false triggering and improve reliability in dynamic environments.

Future development may include the addition of a graphical display instead of a basic 16×2 LCD. A TFT or touch-based display can provide a more interactive user interface, allowing users to configure system parameters easily. Menu-based navigation, batch memory options, and error indication features can enhance usability.

Furthermore, incorporating adjustable speed control using PWM techniques can allow users to modify the motor speed according to paper thickness and type. This will increase flexibility and ensure smooth operation across different material conditions.In addition to technical improvements, the system can be further developed into a commercially viable product. By refining the mechanical design and enclosing the components within a durable and aesthetically designed casing, the prototype can be converted into a market-ready device. Industrial-grade materials and compact PCB design can enhance durability, safety, and professional appearance.

The machine can also be upgraded to support multi-sheet thickness detection.

By integrating intelligent sensing mechanisms and improved signal processing algorithms, the system can identify overlapping sheets or double feeding conditions. This would significantly enhance accuracy in environments where paper alignment may not be perfect.Another promising enhancement is the integration of artificial intelligence or machine learning techniques for adaptive calibration. The system could automatically adjust sensor sensitivity and motor speed based on environmental conditions and paper characteristics. Such smart adaptability would make the system more robust and suitable for diverse applications.

For large-scale industries, the machine can be integrated into automated document handling lines. By combining it with conveyor systems, sorting mechanisms, and packaging units, a complete automated paper processing system can be developed. This would greatly enhance throughput and reduce human dependency in industrial environments.

In the future, the project can also be expanded to count other flat materials such as cardboard sheets, thin plastic sheets, or laminated documents. With minor mechanical and sensing modifications, the same system architecture can be adapted for multiple material-handling applications.

In conclusion, the proposed system provides a strong foundation for further technological advancements. With enhancements in sensing, control, connectivity, and mechanical design, the paper counting machine can evolve from a prototype model into a smart, scalable, and industrial-grade automation solution suitable for modern document processing requirements.

Further advancements can focus on improving system accuracy under high-speed conditions. In industrial environments where sheets move rapidly, high-frequency sensing and interrupt-based programming techniques can be implemented to ensure zero data loss. Optimized real-time processing algorithms can be developed to increase counting speed without compromising precision.

Another important enhancement involves incorporating error detection and alert mechanisms. The system can be designed to identify paper jams, misalignment, or empty feeder conditions. In such cases, the machine can automatically stop and display an error message on the screen while activating a warning buzzer. This feature would significantly improve operational safety and reliability.

Integration with digital inventory management systems is also a promising extension. The counting data can be directly linked with accounting or stock management software, reducing manual data entry and improving record accuracy. This will be particularly beneficial in printing

presses and packaging industries where batch tracking is essential.

.

The mechanical design can be further optimized using precision-engineered rollers and adjustable guide rails. Introducing automatic sheet alignment mechanisms can improve feeding consistency and reduce the chances of overlapping sheets. This would enhance overall system stability during continuous operation.

From an academic and research perspective, the project can be expanded into a fully automated document processing unit. By combining counting, sorting, bundling, and labeling functionalities, a complete paper handling automation system can be developed. This would demonstrate advanced integration of embedded systems, control systems, and mechanical automation.

Moreover, the system can be miniaturized using custom PCB design instead of breadboard or development boards. A dedicated compact circuit board would reduce size, improve reliability, and make the device more suitable for commercial manufacturing.

Finally, sustainability improvements can be considered by using energy-efficient motors and recyclable structural materials. The development of eco-friendly automation systems aligns with modern engineering practices and industrial standards.

CHAPTER 8
APPENDICES

APPENDIX

This section is reserved for supplementary and supporting information related to the Automated Paper Counting Machine project. The appendix is intended to provide additional technical clarification and reference material that complements the main content of the report.

All major technical components of the project, including system design, hardware implementation, source code, circuit diagrams, working principle, and performance evaluation, have already been presented in detail within their respective chapters of the main report. The documentation has been structured in a comprehensive manner to ensure clarity, completeness, and ease of understanding.

The inclusion of this appendix section ensures proper academic formatting and adherence to standard project report guidelines. It serves as a reference segment that may accommodate any future supporting documents, extended datasets, additional design revisions, or supplementary materials if required.

At present, no separate supplementary documents are attached beyond those already incorporated into the main body of the report.

CHAPTER 9

REFERENCES

REFERENCES

1. J. Smith and P. Brown, “Design of automated paper counting systems using mechanical feeders,” International Journal of Mechanical Engineering, vol. 22, no. 4, pp. 45–52, 2005.
2. R. Kumar and S. Reddy, “Infrared sensor based paper counting machine,” in Proceedings of the National Conference on Emerging Technologies in Automation, Hyderabad, India, 2010, pp. 110–115.
3. L. Zhang, Y. Chen, and H. Wang, “Microcontroller controlled paper counting system with optical sensors,” in IEEE International Conference on Automation Science and Engineering, Fort Worth, TX, USA, 2016, pp. 812–817.
4. M. Patel and A. Singh, “Development of stepper motor based sheet counting machine,” Journal of Engineering Research and Applications, vol. 8, no. 3, pp. 25–30, 2018.
5. Gupta and R. Sharma, “Hybrid sensing techniques for low-cost paper counting machines,” International Journal of Advanced Research in Electrical, Electronics and Instrumentation Engineering, vol. 12, no. 2, pp. 66–72, 2023.
6. S. K. Das and P. Roy, “Automation in paper handling systems for industrial applications,” International Journal of Industrial Automation, vol. 14, no. 1, pp. 21–29, 2017.
7. T. Yamamoto and K. Suzuki, “Mechanical sheet feeding and separation mechanisms for document processing systems,” IEEE Transactions on Industrial Electronics, vol. 60, no. 10, pp. 4563–4571, 2013.
8. H. Lee and J. Kim, “Optical sensing techniques for sheet detection in automated document processing,” Sensors, vol. 15, no. 4, pp. 8452–8467, 2015.
9. Rahman, M. Hossain, and S. Islam, “Infrared sensing methods for sheet counting and detection systems,” International Journal of Electronics and Communication Engineering, vol. 11, no. 5, pp. 334–339, 2017.
10. D. Banerjee and A. Chatterjee, “Microcontroller-based automation system for document handling applications,” International Journal of Embedded Systems, vol. 9, no. 2, pp. 112 119, 2018.
11. F. Wang and L. Zhao, “High-speed optical sheet detection for automated paper handling systems,” IEEE Sensors Journal, vol. 19, no. 12, pp. 4532–4539, 2019.
12. K. Tanaka, “Industrial paper counting and sorting machines: Design challenges and solutions,” Journal of Manufacturing Systems, vol. 45, pp. 120–128, 2017.

13 P. S. Reddy and V. Narayanan, “Low-cost embedded automation systems for small scale industries,” International Journal of Automation and Computing, vol. 16, no. 3, pp. 301–309, 2019. XIV. M. Schwartz, Internet of Things with ESP32: Building Embedded Applications, New York, NY, USA: McGraw-Hill, 2021.

14 S. Roy and A. Mukherjee, “Design and analysis of automated document counting systems,” International Journal of Mechatronics and Automation, vol. 10, no. 2, pp. 89–97, 2014.

15. Y. Liu and Q. Wang, “Embedded control systems for paper handling automation,” Journal of Control Engineering and Applied Informatics, vol. 18, no. 3, pp. 55–63, 2016.

16. A. Mehta and R. Kulkarni, “Low-cost microcontroller-based sheet detection mechanism,” International Journal of Embedded and Real-Time Communication Systems, vol. 7, no. 4, pp. 120–128, 2015.

17. J. Park and H. Kim, “Sensor-based sheet counting algorithms for automated document feeders,” IEEE Access, vol. 6, pp. 24567–24575, 2018.

18. V. Sharma and N. Gupta, “Design optimization of roller mechanisms for paper feeding systems,” International Journal of Mechanical Design, vol. 9, no. 1, pp. 33–41, 2013.

19. M. Torres and L. Hernandez, “Real-time sheet detection using optical and infrared sensors,” Sensors and Actuators A: Physical, vol. 250, pp. 162–170, 2016.

20. K. Rao and P. Jain, “Automation techniques in small-scale document processing units,” International Journal of Industrial Electronics, vol. 11, no. 2, pp. 78–85, 2017.

21. T. Nguyen and D. Pham, “Microcontroller-based intelligent batching system for paper industries,” Journal of Automation and Control Engineering, vol. 5, no. 3, pp. 101–109, 2018.

22. L. Martins and E. Costa, “Performance evaluation of automated sheet counting machines,” International Journal of Manufacturing Systems, vol. 12, no. 4, pp. 211–220, 2019.

23. R. Ali and S. Hussain, “Cost-effective automation models for document handling,” International Journal of Engineering Research and Technology, vol. 8, no. 6, pp. 402–408, 2019.

24. B. Chandra and M. Verma, “Design of contactless sensing systems for material counting applications,” IEEE Sensors Letters, vol. 4, no. 9, pp. 1–4, 2020.

25. H. Suzuki and T. Mori, “High-speed sheet separation techniques in automated feeders,” IEEE Transactions on Industrial Applications, vol. 56, no. 3, pp. 2981–2989, 2020.

26. P. Kumar and S. Arora, “Development of portable embedded automation systems using ESP32,” International Journal of Smart Systems and Applications, vol. 13, no. 1, pp. 44–53, 2021.