MySpot

Team Members: Lakshya Jain, Jenna Baker, Liam Erickson, Tia Mehta, Chatty

Email Addresses: lakshyajain@vt.edu, bjenna@vt.edu, liamerickson@vt.edu, mtia@vt.edu

CS 4604, Dr. Nizamani

Spring 2026

Table of Contents

1. Last Submitted ER diagram **3**
2. Updated ER Diagram **3**
2.1 ER Diagram of Logical Database Design 3
2.2 Details of the Alterations 4
3. Relational Schema Diagram **5**
4. Roles of Project Members **5**

1. Last Submitted ER diagram

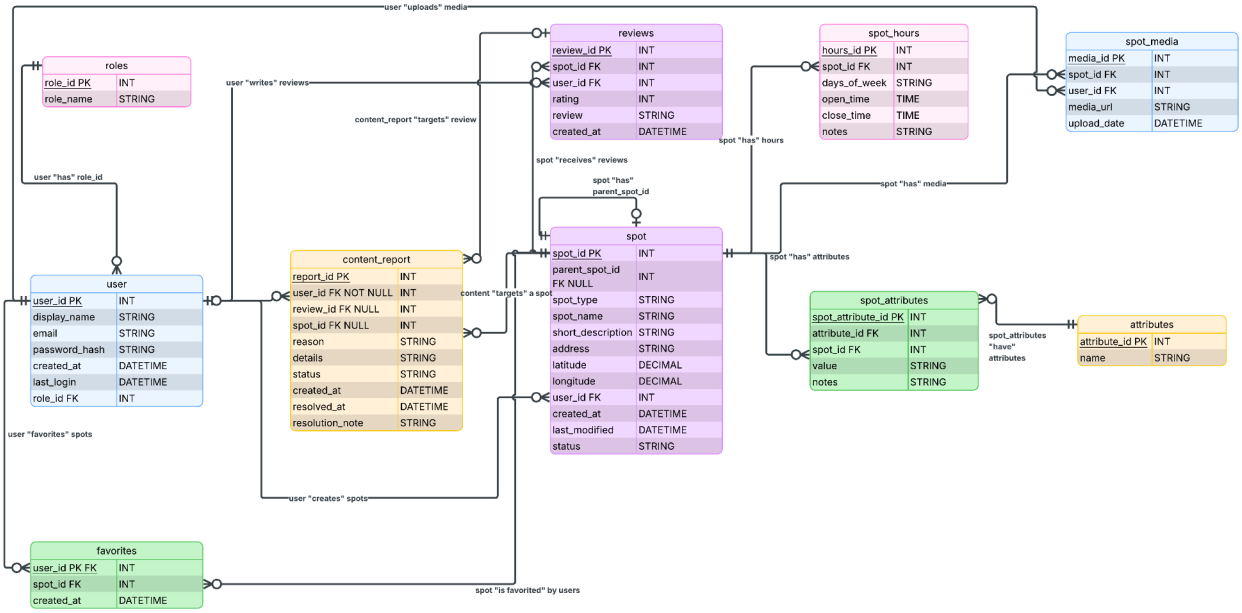

2. Updated ER Diagram

2.1 ER Diagram of Logical Database Design

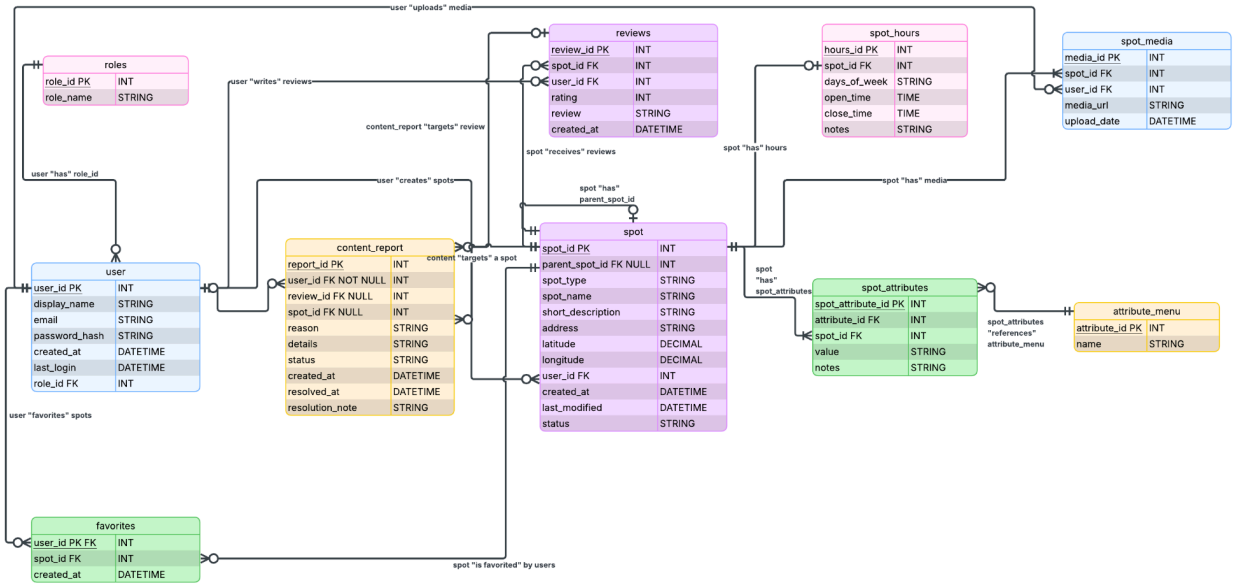

To access the enlarged version of the Entity Relationship Diagram, please click on the following link:
https://lucid.app/lucidchart/240d7658-5b68-4513-a6aa-ce425d5289d8/edit?viewport_loc=-935%2C-6865%2C3989%2C2061%2C0_0&invitationId=inv_64a8dfad-4f0b-4237-b776-b0c34313380d

2.2 Details of the Alterations

The relationship involving attributes was corrected to accurately represent the interaction between **spot** and **attributes_menu** through the associative entity **spot_attributes**. The earlier phrasing suggesting that a user is described by attributes was a wording error and did not reflect the actual structure. The entity previously named **attributes** was renamed to **attributes_menu** to clarify that it stores the master list of unique, reusable attributes that can be associated with multiple spots. In crow's foot notation, the relationship is modeled as **spot** (1) to (1..) **spot_attributes** and **attributes_menu** (1) to (0..) **spot_attributes**, which correctly represents a many-to-many relationship resolved through an associative entity. This ensures that each spot can have multiple attributes, and each attribute can be applied to multiple spots. The separation between **attributes_menu** (definition of attributes) and **spot_attributes** (association of attributes to spots) removes ambiguity and clearly defines the role of each entity.

The Favorites and Reviews relationships were also clarified to consistently reference both **user** and **spot**. These are modeled as associative entities between **user** and **spot**, each representing a many-to-many relationship. In crow's foot notation, **user** (1) connects to (0..) **favorite**, and **spot** (1) connects to (0..) **favorite**; similarly, **user** (1) connects to (0..) **review**, and **spot** (1) connects to (0..) **review**. Each **favorite** and **review** must reference exactly one user and exactly one spot. Additionally, constraints were clarified: a user can favorite a specific spot only once, and the rating attribute in **review** is restricted to a defined domain (e.g., 1–5). These refinements ensure consistent participation, eliminate ambiguity, and enforce referential integrity.

The hierarchy design was implemented using a recursive relationship within the **spot** entity through the attribute parent_spot_id instead of creating separate entities such as Building, Floor, and Room. In crow's foot notation, this is represented as Spot (1) to (0..*) Spot, where a parent spot may contain multiple child spots, and a child spot may optionally reference one parent. This approach models containment flexibly and allows the hierarchy to expand without structural changes. A top-level spot may have no parent, reflecting optional participation on the child side. This recursive design supports varying levels of hierarchy (e.g., campus, building, floor, room, or other categories) while maintaining a single, consistent entity structure.

Several relationship cardinalities were refined to better enforce business requirements. The relationship between **spot** and **spot_media** was changed from **spot** (1) to (0..) **spot_media** to **spot** (1) to (1..) **spot_media**. This makes media participation mandatory, meaning every spot must have at least one associated media record. This ensures that each spot includes visual or descriptive content and prevents incomplete listings. The **spot–spot_hours** relationship was changed from **spot** (1) to (0..) **spot_hours** to **spot** (1) to (0..1) **spot_hours**. This reflects that each spot may have at most one structured hour record, rather than multiple independent entries. The **spot–spot_attributes** relationship was also refined from **spot** (1) to (0..) **spot_attributes** to **spot** (1) to (1..*) **spot_attributes**, enforcing that each spot must have at least one attribute. This mandatory participation ensures that every spot includes meaningful descriptive information.

3. Relational Schema Diagram

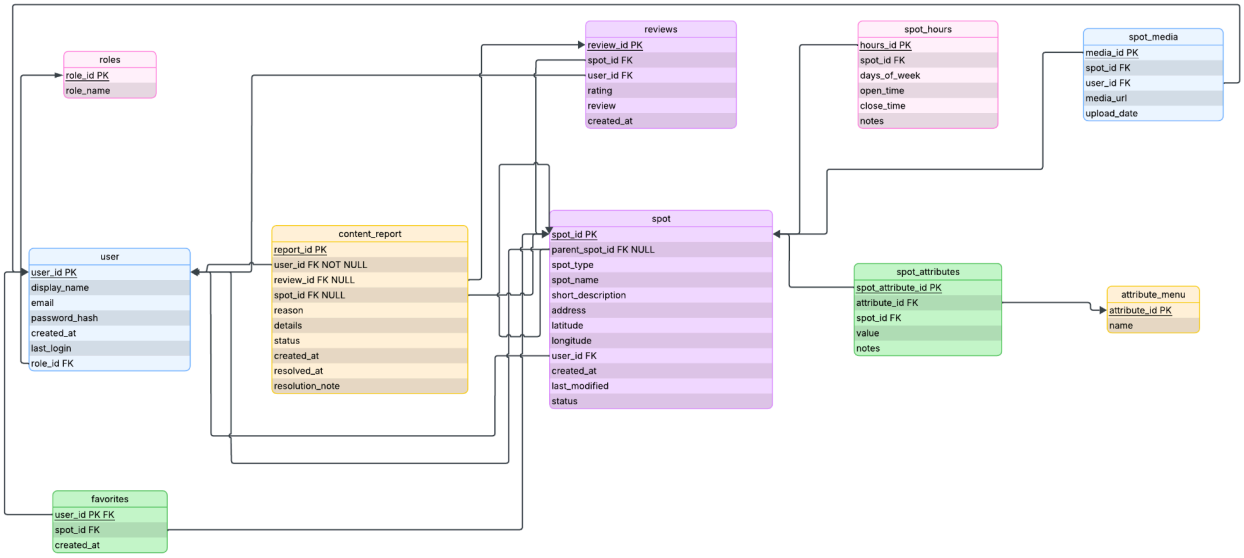

To access the enlarged version of the Entity Relationship Diagram, please click on the following link:
https://lucid.app/lucidchart/240d7658-5b68-4513-a6aa-ce425d5289d8/edit?invitationId=inv_64a8dfad-4f0b-4237-b776-b0c34313380d&page=SefA0~st0aFJ#

4. Roles of Project Members

Team Member 1: Lakshya Jain
Role:

- Contributed to brainstorming changes to the ER diagram
- Contributed to brainstorming of relational schema diagram
- Wrote 2.2 Details of the Alterations

Team Member 2: Jenna Baker
Role:

- Contributed to brainstorming changes to the ER diagram
- Contributed to brainstorming of relational schema diagram

Team Member 3: Liam Erickson
Role: Brainstormer

- Contributed and brainstormed changes to the ER Diagram
- Helped change/fix crows feet notation in the ER diagram

Team Member 4: Tia Mehta
Role:

- Created Relational Schema Diagram
- Contributed to revisions of ER Diagram

Generative AI: Chatty
Role:

- Helped give improvements to implement in our ER diagram
- Helped give pointers on making a relational schema diagram