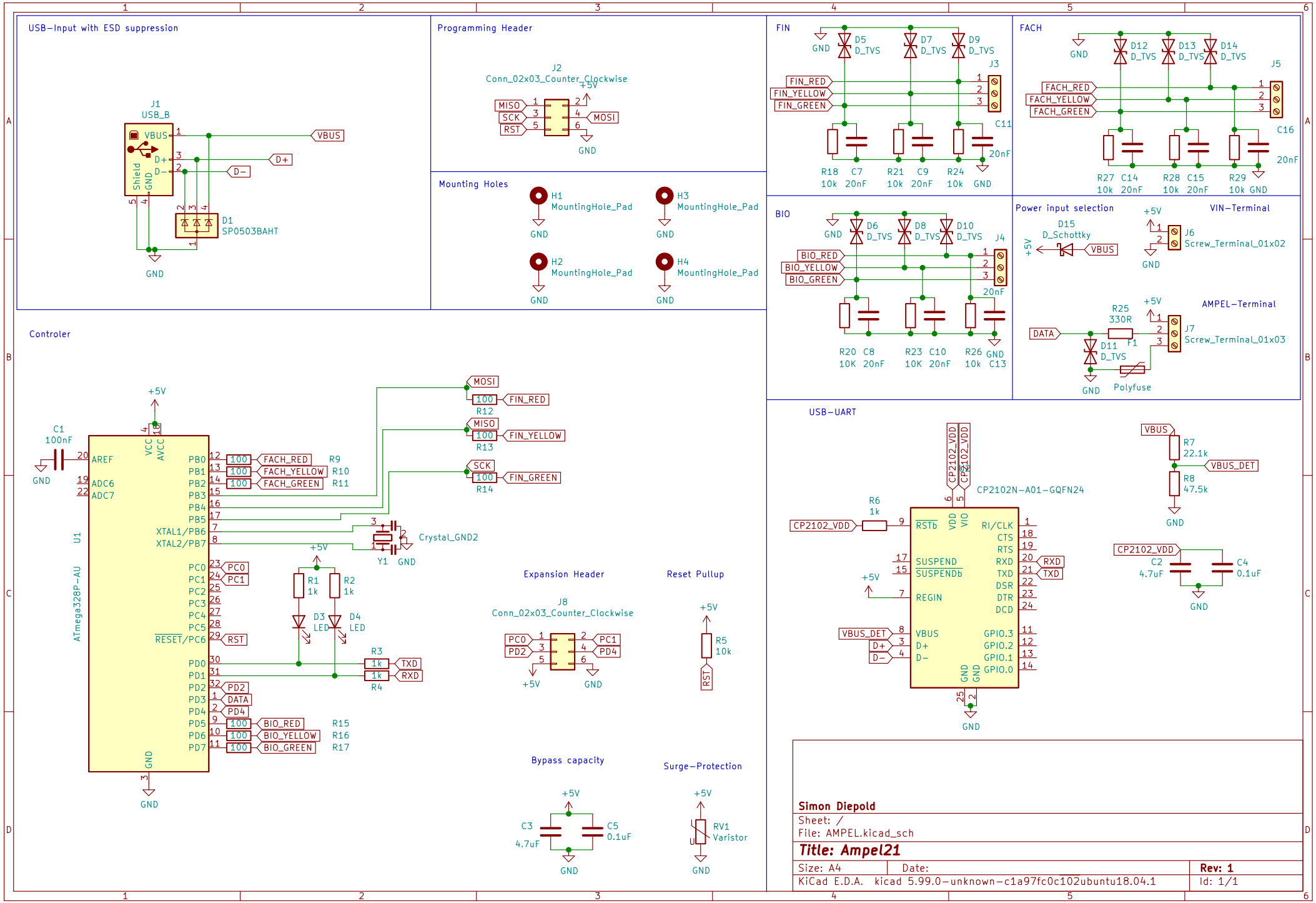
USB-Input with ESD suppression
J1
USB_B
VBUS
D+
D-
Shield
GND
D1
SP0503BAHT
Programming Header
J2
Conn_02x03_Counter_Clockwise
+5V
MISO
SCK
RST
MOSI
Mounting Holes
H1
MountingHole_Pad
H2
MountingHole_Pad
H3
MountingHole_Pad
H4
MountingHole_Pad
FIN
D5
D_TVS
D7
D_TVS
D9
D_TVS
J3
FIN_RED
FIN_YELLOW
FIN_GREEN
C11
20nF
R18
10k
C7
20nF
R21
10k
C9
20nF
R24
10k
FACH
D12
D_TVS
D13
D_TVS
D14
D_TVS
J5
FACH_RED
FACH_YELLOW
FACH_GREEN
C16
20nF
R27
10k
C14
20nF
R28
10k
C15
20nF
R29
10k
BIO
D6
D_TVS
D8
D_TVS
D10
D_TVS
J4
BIO_RED
BIO_YELLOW
BIO_GREEN
20nF
R20
10K
C8
20nF
R23
10K
C10
20nF
R26
10k
C13
Power input selection
D15
D_Schottky
VIN-Terminal
J6
Screw_Terminal_01x02
AMPEL-Terminal
R25
330R
F1
J7
Screw_Terminal_01x03
DATA
D11
D_TVS
Polyfuse
Controler
C1
100nF
AREF
ADC6
ADC7
VCC
AVCC
PB0
PB1
PB2
PB3
PB4
PB5
XTAL1/PB6
XTAL2/PB7
PC0
PC1
PC2
PC3
PC4
PC5
RESET/PC6
PD0
PD1
PD2
PD3
PD4
PD5
PD6
PD7
U1
ATmega328P-AU
R9
R10
R11
R12
R13
R14
Crystal_GND2
Y1
R1
1k
R2
1k
D3
LED
D4
LED
R3
1k
R4
1k
TXD
RXD
BIO_RED
BIO_YELLOW
BIO_GREEN
R15
R16
R17
Expansion Header
J8
Conn_02x03_Counter_Clockwise
Reset Pullup
R5
10k
Bypass capacity
C3
4.7uF
C5
0.1uF
Surge-Protection
RV1
Varistor
USB-UART
CP2102N-A01-GQFN24
R6
1k
CP2102_VDD
RSTb
SUSPEND
SUSPENDb
REGIN
VBUS
D+
D-
RI/CLK
CTS
RTS
RXD
TXD
DSR
DTR
DCD
GPIO.3
GPIO.2
GPIO.1
GPIO.0
VBUS_DET
R7
22.1k
R8
47.5k
C2
4.7uF
C4
0.1uF
Simon Diepold
Sheet: /
File: AMPEL.kicad_sch
Title: Ampel21
Size: A4
Date:
Rev: 1
KiCad E.D.A. kicad 5.99.0-unknown-c1a97fc0c102ubuntu18.04.1
Id: 1/1