CPU Scheduling

DSC 315: Computer Organization & Operating Systems

Dr. Laltu Sardar

School of Data Science,
Indian Institute of Science Education and Research Thiruvananthapuram (IISER TVM)

March 25 & 27, 2026

Table of Content

1. CPU Scheduling
   - Basic Concepts
   - Scheduling Algorithms
   - Multi-Processor Scheduling

Mandatory Reading From textbook:
Chapters 5.1, 5.2, 5.3, 5.5

5.1

Basic Concepts

Basic Concepts

CPU Scheduling

- Scheduling is used for efficient utilization of CPU.
- CPU is one of the primary resources in a system.

CPU–I/O Burst Cycle

- Process execution alternates between:
  - CPU burst
  - I/O burst
- Process starts with CPU burst and ends with CPU burst.
- This cycle continues throughout process lifetime.

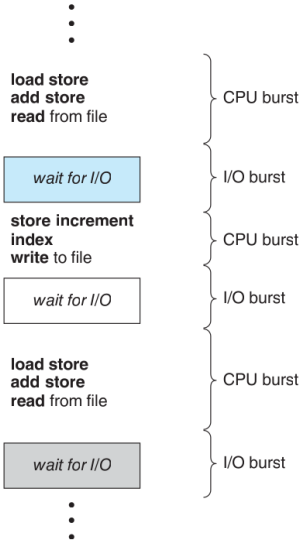

Schedulers and Dispatcher

Schedulers

- After every I/O burst, process enters ready queue.
- Scheduler selects the next process to execute.
- Queues used:
  - FIFO queue
  - Priority queue

Dispatcher

- Transfers CPU control to selected process.

Context Switching

- Switching CPU from one process to another.
- Requires saving and restoring process state.
- Overhead depends on hardware.
- Measured in milliseconds.

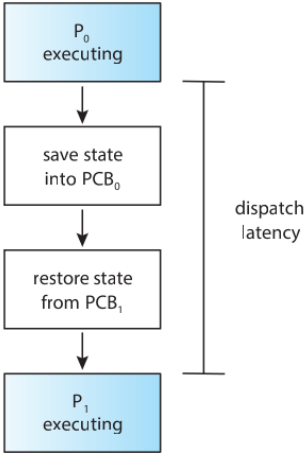

Figure: Dispatcher and Context Switching

Scheduling Decision (5.2)

When Scheduling Occurs

1. Running $\rightarrow$ Waiting
2. Running $\rightarrow$ Ready
3. Waiting $\rightarrow$ Ready
4. Process terminates

Types of Scheduling

- Non-preemptive: (1) and (4)
- Preemptive: all cases

Modern Systems

- Mostly preemptive

Scheduling Criteria

1. **CPU Utilization**
   - Keeps CPU busy
2. **Throughput**
   - Number of processes completed per unit time
3. **Turnaround Time**
   - Submission to completion time
4. **Waiting Time**
   - Time spent in ready queue
5. **Response Time**
   - Time from submission to first response

5.3

CPU Scheduling Algorithms

First Come First Serve (FCFS) (5.3.1)

Assumptions

- Single CPU
- One process executes at a time

Example

- P1 = 24, P2 = 3, P3 = 3

Execution Order

- P1 $\rightarrow$ P2 $\rightarrow$ P3

[Insert Gantt Chart]

FCFS Waiting Time Analysis

Average Waiting Time

$$\frac{0 + 24 + 27}{3} = 17$$

Improved Order

- P2 $\rightarrow$ P3 $\rightarrow$ P1

$$\frac{0 + 3 + 6}{3} = 3$$

Observation

- Order significantly affects performance

FCFS Drawbacks

- Convoy effect:
  - Short processes wait behind long processes
- Non-preemptive
- Poor for interactive systems

Shortest Job First (SJF) (5.3.2)

Idea

- Select process with shortest CPU burst

Problem

- Burst time is not known in advance

Example

- P1 = 6, P2 = 8, P3 = 7, P4 = 3

Execution

- P4 $\rightarrow$ P1 $\rightarrow$ P3 $\rightarrow$ P2

[Insert Gantt Chart]

SJF Properties

Average Waiting Time

$$\frac{0+3+9+16}{4} = 7$$

Key Property

- SJF gives minimum average waiting time

Burst Time Prediction

Exponential Averaging

$$T_{n+1} = \alpha t_n + (1 - \alpha) T_n$$

Special Case

$$T_{n+1} = \frac{t_n + T_n}{2} \quad (\alpha = 1/2)$$

Interpretation

- Uses past values to predict next CPU burst

Shortest Remaining Time First (SRTF)

Definition

- Preemptive version of SJF
- Process with smallest remaining time executes

Example

- Arrival: P1=0, P2=1, P3=2, P4=3
- Burst: P1=8, P2=4, P3=9, P4=5

[Insert Timeline Diagram]

Round Robin (RR) (5.3.3)

Concept

- Each process gets fixed time quantum
- After quantum expires:
  - Process goes to end of queue

Characteristics

- Small quantum $\rightarrow$ many context switches
- Large quantum $\rightarrow$ behaves like FCFS

Rule of Thumb

- Quantum $\approx$ 80% of CPU bursts

Priority Scheduling

Definition

- Highest priority process executes first

Types

- Internal priority
- External priority

Issue: Starvation

- Low priority processes may never execute

Solution: Aging

- Increase priority over time

Multilevel Queue Scheduling

- Multiple queues based on process type
- Each queue has its own scheduling algorithm
- Scheduling between queues required

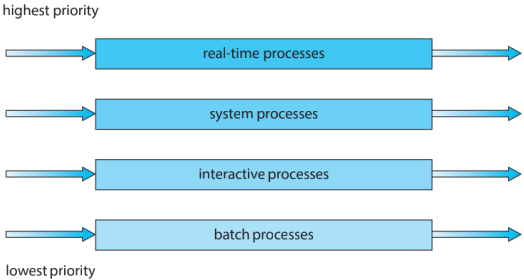

Figure: Multilevel queue scheduling.

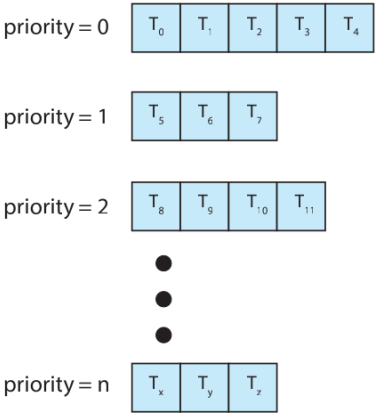

Figure: Separate queues for each priority.

Multilevel Feedback Queue

- A process can move between the various queues.

Multilevel-feedback-queue scheduler is defined by:

- Number of queues
- Scheduling algorithm for each queue
- Method to determine when to upgrade a process
- Method to determine when to demote a process
- Method to determine which queue a process will enter when it needs service

Note:

- Aging can be implemented using multilevel feedback queue

Example of Multilevel Feedback Queue

Three queues:

- Q0 – RR with time quantum 8 milliseconds
- Q1 – RR with time quantum 16 milliseconds
- Q2 – FCFS

Scheduling

- A new process enters queue Q0 which is served in RR
  - When it gains CPU, the process receives 8 milliseconds
  - If it does not finish in 8 milliseconds, it is moved to Q1
- At Q1 job is again served in RR and receives 16 additional milliseconds
  - If it still does not complete, it is preempted and moved to Q2

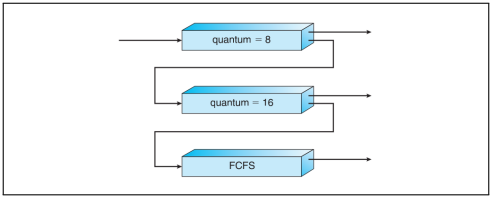

Figure: Multilevel Feedback Queue Example

List of Scheduling Algorithms

- CPU scheduling improves utilization
- Multiple algorithms exist:
  - FCFS
  - SJF
  - SRTF
  - Round Robin
  - Priority Scheduling
- Trade-offs exist between:
  - Fairness
  - Efficiency
  - Response time

5.5

Multi-Processor Scheduling

References

Textbook:

1. Avi Silberschatz, Peter B. Galvin, and Greg Gagne. *Operating System Concepts*. Global Edition. Wiley, 2023. ISBN: 9781119320913.

Slides:

1. Avi Silberschatz, Peter Baer Galvin, and Greg Gagne. *Operating System Concepts, Tenth Edition: Lecture Slides*. Wiley, 2018. Available at: `https://os-book.com/OS10/slide-dir/index.html`. Accessed: 2026-03-06.

Dr. Laltu Sardar, Assistant Professor, IISER Thiruvananthapuram
laltu.sardar@iisertvm.ac.in, laltu.sardar.crypto@gmail.com
Course webpage: https://laltu-sardar.github.io/courses/corgos_2026.html.