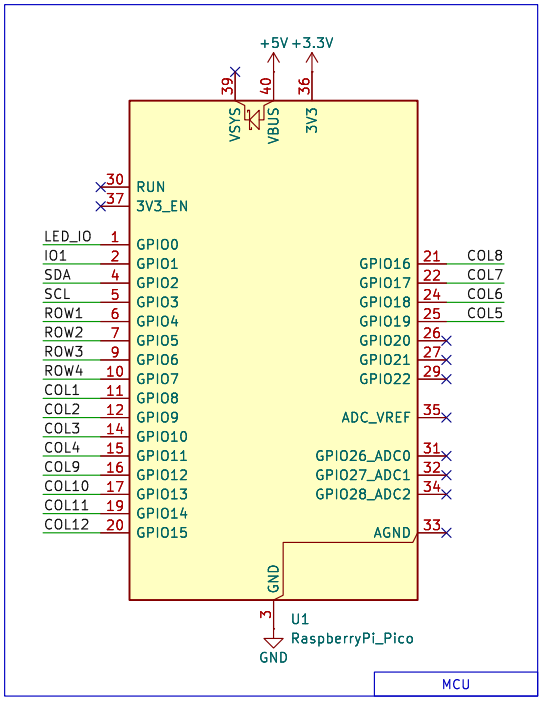


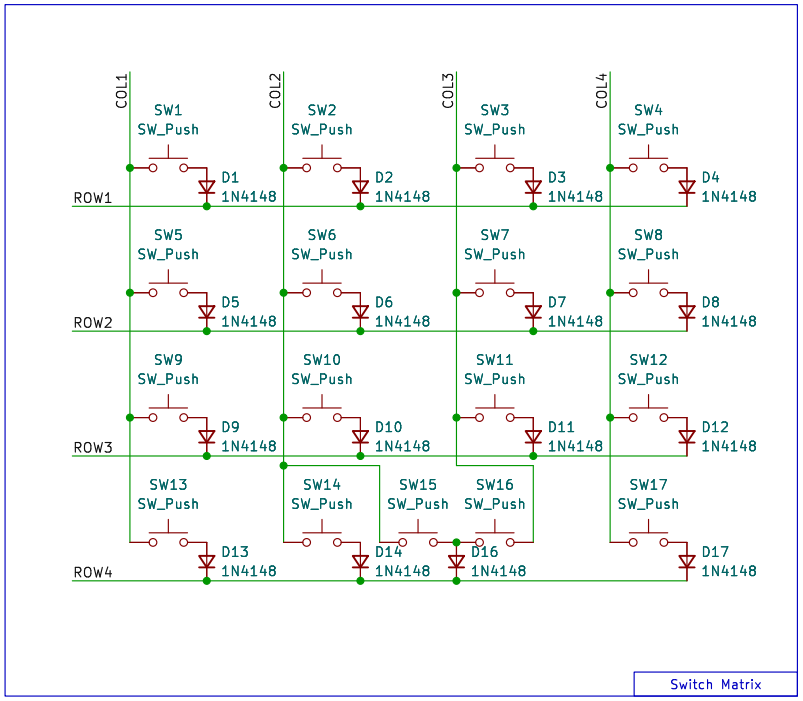


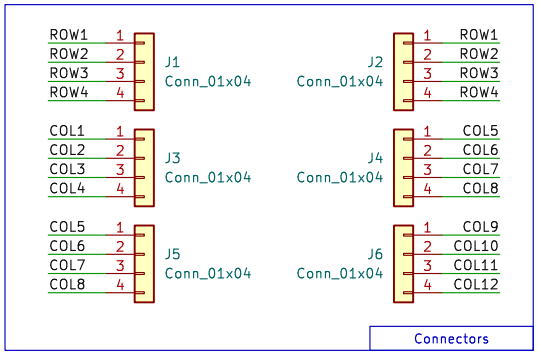


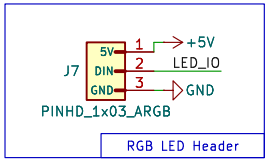


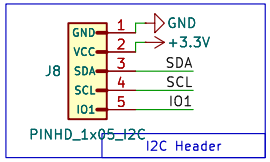


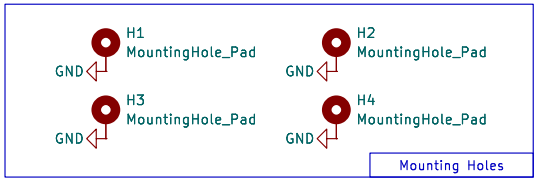


https://lambdakb.dev/

**LambdaKB.dev**

Sheet: /

File: lk16c-pcb.kicad_sch

**Title: LK16C**

| | | |
|---|---|---|
| Size: A4 | Date: 2025-05-13 | **Rev: v1.00** |
| KiCad E.D.A. 9.0.1 | | Id: 1/1 |