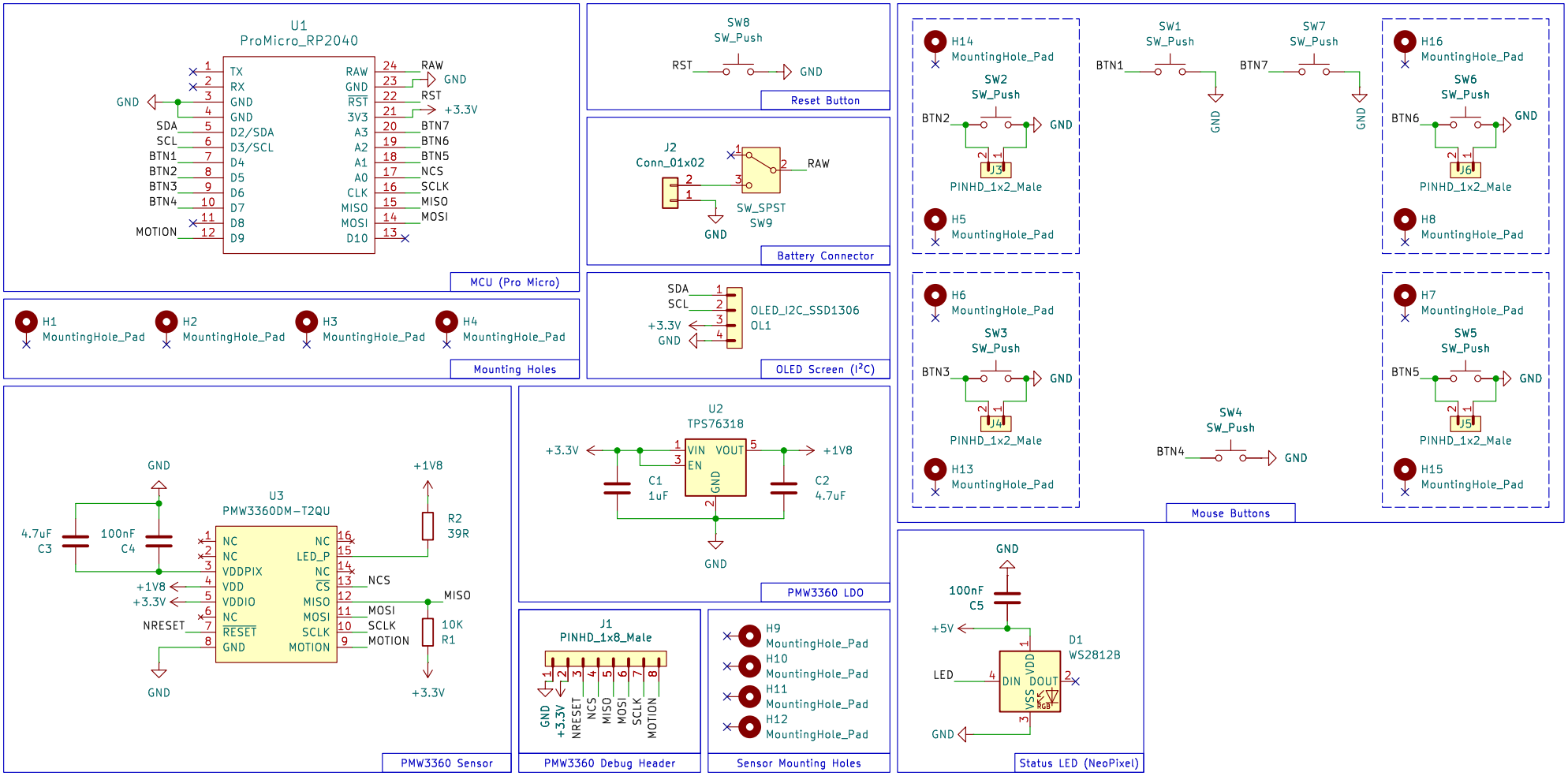

https://lambdakb.dev/devices/lt7dk/

LambdaKB.dev

Sheet: /

File: lt7dk-pcb.kicad_sch

Title: LT7DK

Size: A4	Date: 2024-12-09	**Rev: v1.00**
KiCad E.D.A. 8.0.6		Id: 1/1