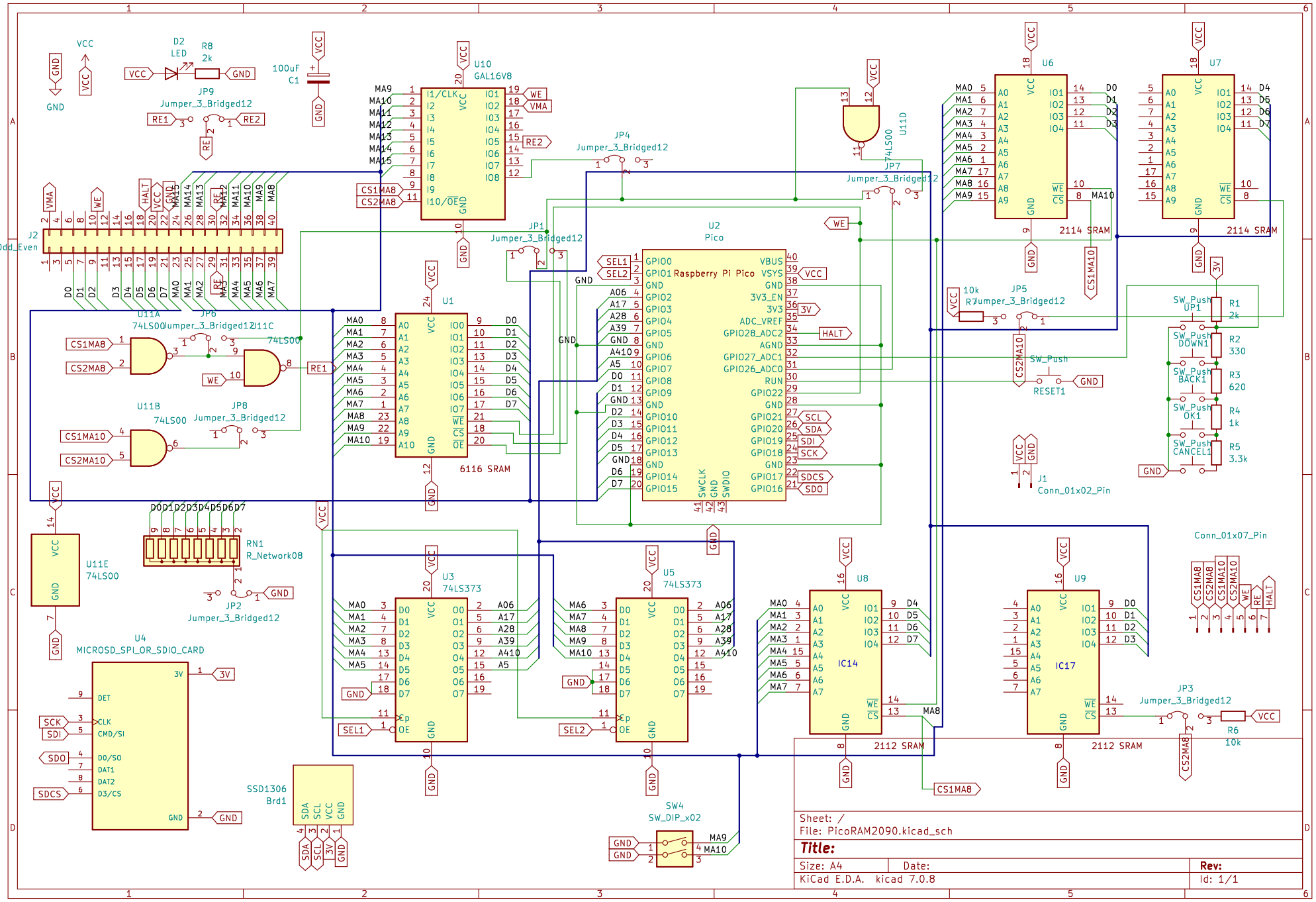
U10
GAL16V8
U2
Pico
Raspberry Pi Pico
U1
6116 SRAM
U6
U7
2114 SRAM
U3
74LS373
U5
74LS373
U8
IC14
2112 SRAM
U9
IC17
2112 SRAM
U4
MICROSD_SPI_OR_SDIO_CARD
SSD1306
Brd1
SW4
SW_DIP_x02
RN1
R_Network08
J2
_02x20_Odd_Even
J1
Conn_01x02_Pin
Conn_01x07_Pin
U11A
74LS00
U11B
74LS00
U11C
74LS00
U11D
74LS00
U11E
74LS00
JP1
JP2
JP3
JP4
JP5
JP6
JP7
JP8
JP9
Jumper_3_Bridged12
R1
2k
R2
330
R3
620
R4
1k
R5
3.3k
R6
10k
R7
10k
R8
2k
D2
LED
C1
100uF
SW_Push
UP1
DOWN1
BACK1
OK1
CANCEL1
RESET1
Sheet: /
File: PicoRAM2090.kicad_sch
Title:
Size: A4
Date:
Rev:
KiCad E.D.A. kicad 7.0.8
Id: 1/1