David Mohaisen, Professor
University of Central Florida
Department of Computer Science
Cybersecurity and Privacy Cluster

https://cs.ucf.edu/~mohaisen/

Conversational QA and Story Generation

① Conversational QA
② CQA Architectures
③ Neural Storytelling
④ Structured Generation
⑤ Fast Generation
⑥ NLG Evaluation

Objectives

- Understand **Conversational QA (CQA)** and its architectural approaches.
- Analyze challenges in **neural story generation** (coherence, state tracking, causality).
- Explain **structured and event-driven generation** methods.
- Understand **non-autoregressive generation** for fast NMT.
- Evaluate strengths and limitations of **NLG evaluation metrics**.

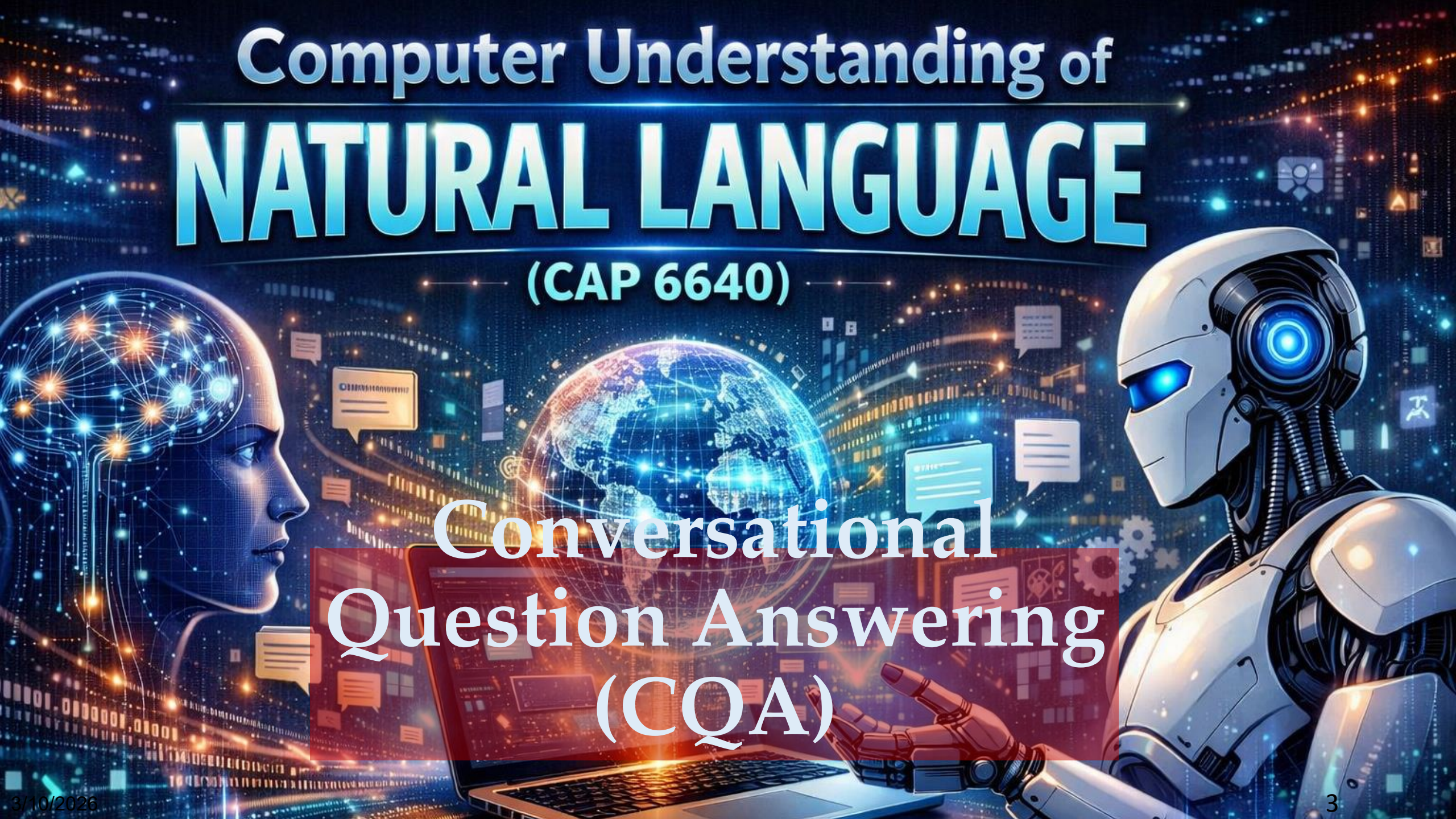

Conversational Question Answering (CQA)

Conversational Question Answering (CQA)

- **What is Conversational Question Answering?**
  - A subfield of NLP that enables machines to answer user queries in a multi-turn conversation.
  - Unlike traditional QA, CQA maintains context across turns.
- **Key Challenges**
  - **Context Tracking:** Understanding previous questions and responses.
  - **Ellipsis and Coreference Resolution:** Handling incomplete questions (e.g., *"What about the second one?"*).
  - **Ambiguity and Clarifications:** Managing vague or underspecified queries.
- **Examples of CQA Systems**
  - Open-domain (e.g., ChatGPT, Google's Bard).
  - Knowledge-grounded (e.g., Wikipedia-based QA).
  - Task-oriented (e.g., customer service bots).

Methods and Architectures for CQA

- **Modeling Approaches**
  - **Retrieval-based:** Searches for the best response from a predefined set.
  - **Generative:** Produces responses dynamically using language models (e.g., GPT, BART).
  - **Hybrid:** Combines retrieval and generation (e.g., Retrieval-Augmented Generation).

- **Architectures**
  - **Memory Networks:** Store and retrieve conversation history (e.g., DrQA + Memory Networks).
  - **Transformer-based Models:**
    - BERT-based (QuAC, CoQA models).
    - GPT-based (dialogue-aware transformers).

- **Datasets for Training and Evaluation**
  - **CoQA (Conversational QA)**: Context-dependent dialogues with free-form answers.
  - **QuAC (Question Answering in Context)**: QA over Wikipedia with multi-turn dialogue.
  - **DoQA (Domain-specific CQA)**: QA for specific domains (e.g., cooking, travel).

Stanford NLP's New Dataset for CQA

- **Dataset Overview**
  - Developed by **Stanford NLP** for Conversational QA.
  - Focuses on answering **questions about a given text** in a multi-turn dialogue.
  - **Answers are abstractively generated**, not directly copied from the passage.

- **Key Characteristics**
  - **Hybrid Task**:
    - **Reading Comprehension**: Extracting and reasoning over text.
    - **Dialogue Understanding**: Maintaining conversation history.
  - **Contextual Awareness**: Questions depend on previous turns.
  - **Abstractiveness**: Answers require synthesis, not verbatim.

Jessica went to sit in her rocking chair. Today was her birthday and she was turning 80. Her granddaughter Annie was coming over in the afternoon and Jessica was very excited to see her. Her daughter Melanie and Melanie's husband Josh were coming as well. Jessica had . . .

Q_1: Who had a birthday?
A_1: Jessica
R_1: Jessica went to sit in her rocking chair. Today was her birthday and she was turning 80.

Q_2: How old would she be?
A_2: 80
R_2: she was turning 80

Q_3: Did she plan to have any visitors?
A_3: Yes
R_3: Her granddaughter Annie was coming over

Q_4: How many?
A_4: Three
R_4: Her granddaughter Annie was coming over in the afternoon and Jessica was very excited to see her. Her daughter Melanie and Melanie's husband Josh were coming as well.

Q_5: Who?
A_5: Annie, Melanie and Josh
R_5: Her granddaughter Annie was coming over in the afternoon and Jessica was very excited to see her. Her daughter Melanie and Melanie's husband Josh were coming as well.

Figure 1: A conversation from the CoQA dataset. Each turn contains a question (Q_i), an answer (A_i) and a rationale (R_i) that supports the answer.

📜 **Text:** "Marie Curie was a physicist and chemist who discovered radioactivity."
✅ **Q1:** "What did she discover?" → "She discovered radioactivity."
✅ **Q2:** "How did that impact science?" → "It led to advancements in medical imaging and nuclear physics."

Storytelling

Storytelling

- **What is Storytelling in NLP?**
  - The ability of AI to generate **coherent, engaging, and structured narratives**.
  - Requires understanding of **plot progression, character development, and stylistic consistency**.
  - Applications:
    - Automated content generation (e.g., fiction, news, summaries).
    - Interactive storytelling (e.g., AI-driven game narratives).
    - Assistive writing tools for authors.

- **Key Challenges**
  - **Coherence & Structure**: Ensuring logical story progression.
  - **Character Consistency**: Maintaining attributes across the narrative.
  - **Creativity vs. Factuality**: Balancing imaginative storytelling with realism.
  - **User Interactivity**: Adapting dynamically to prompts or reader input.

Prompting Strategies for Storytelling

- **Effective Prompt Design**
  - **Controlled Prompts**: Provide structure for guided story generation.
    - *Example:* "Write a mystery story set in 1920s Paris, featuring a detective solving an art heist."
  - **Open-Ended Prompts**: Encourage creativity without strict constraints.
    - *Example:* "A scientist discovers a hidden dimension in their laboratory…"
  - **Character-Driven Prompts**: Focus on protagonist traits and goals.
    - *Example:* "Describe an astronaut's emotions as they wake up alone on Mars."
  - **Multi-turn Interactive Prompts**: AI and user co-develop the narrative.
    - *Example:* User provides plot twists, AI continues the story dynamically.

- **Enhancing Storytelling with NLP Models**
  - **Pre-trained models**: GPT, BART, T5 for text generation.
  - **Fine-tuning**: Training models on specific genres or storytelling datasets.
  - **Memory-augmented AI**: Retaining context across multi-turn story development.

Prominent Storytelling Applications

- **Automated Content Generation**
  - **News & Articles**: AI-generated journalism (e.g., GPT-powered news summaries).
  - **Creative Writing**: Assisting novelists, poets, and scriptwriters (e.g., Sudowrite).
  - **Marketing & Branding**: AI-driven ad copy and storytelling (e.g., Jasper AI).

- **Interactive Storytelling & Games**
  - **AI Dungeon**: Procedurally generated text-based adventure games.
  - **Chat-based RPGs**: AI-powered Dungeon Masters create dynamic narratives.
  - **Branching Narratives**: Games that adapt based on player choices (e.g., AI-driven game non-player characters).

- **Personalized Storytelling**
  - **Children's Storybooks**: AI-generated bedtime stories tailored to a child's interests.
  - **Assistive Writing Tools**: AI co-writers suggesting ideas and plot twists (e.g., NovelAI).
  - **Therapeutic Storytelling**: AI-generated narratives for mental health applications.

Storytelling from an Image

- **Visual storytelling** is the process of generating a narrative based on an image.
- **Combines Computer Vision & NLP** to interpret scenes and generate coherent descriptions.
- **Applications**:
  - Assistive technology for visually impaired users.
  - Automated photo captioning.
  - Creative writing prompts from images.

- **Technologies Used**
  - **Image Captioning Models**: Show and Tell (Google), Show, Attend and Tell (Attention-based).
  - **Multimodal Models**: CLIP, BLIP, LLaVA for deeper scene-text integration.
  - **Datasets**: MS-COCO, Visual Storytelling Dataset (VIST).

Storytelling from an Image

1. Image Understanding (Computer Vision)

- Object detection (YOLO, Faster R-CNN).
- Scene recognition (ResNet, CLIP).

2. Caption Generation (NLP & Deep Learning)

- Encoder-Decoder architectures (e.g., CNN + LSTM).
- Transformer-based models (e.g., ViT-GPT2).

3. Narrative Expansion

- **Basic Caption**: *"A child playing with a dog in the park."*
- **Expanded Story**: *"On a bright afternoon, Sarah laughed as her golden retriever, Max, chased a butterfly through the green fields."*

Overcoming the Lack of Parallel Data

- **Challenge: No Parallel Data for Style Transfer or Translation**
  - Many NLP tasks require **aligned (parallel) text pairs;** may not always be available.
  - Alt.: **Leverage a common sentence-encoding space** to bridge different text domains.

- **Solution: Skip-Thought Vectors for Sentence Embeddings**
  - Inspired by **word embeddings (word2vec, GloVe)** but at the **sentence level**.
  - Skip-thought vectors learn rep. by **predicting surrounding sentences** in a text corpus.
  - Enables **unsupervised learning** of semantic meaning across different text styles.

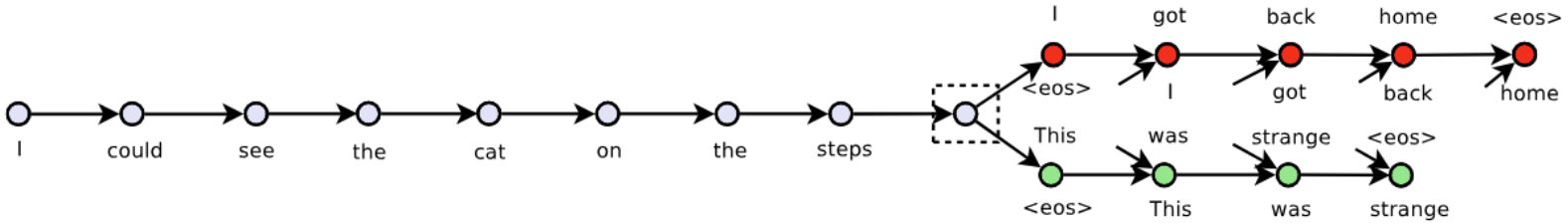

Figure 1: The skip-thoughts model. Given a tuple (s_{i-1}, s_i, s_{i+1}) of contiguous sentences, with s_i the i-th sentence of a book, the sentence s_i is encoded and tries to reconstruct the previous sentence s_{i-1} and next sentence s_{i+1}. In this example, the input is the sentence triplet *I got back home. I could see the cat on the steps. This was strange.* Unattached arrows are connected to the encoder output. Colors indicate which components share parameters. $\langle$eos$\rangle$ is the end of sentence token.

Storytelling from an Image (ChatGPT)

✅ **Story**

As the sun dipped below the trees, Emma walked the silent path, her footsteps echoing in the evening air. Each step carried memories—some to cherish, others she wished to leave behind.

✅ **Caption**

A peaceful pathway embraced by lush greenery, leading into the golden glow of the setting sun.

✅ **Description**

The image depicts a paved pathway stretching into the distance, surrounded by dense, lush greenery. Tall trees and overhanging branches form a natural canopy, partially framing the sky. The sky is a mix of soft blue and warm golden hues, with scattered clouds illuminated by the setting sun. The pathway is flanked by vibrant green grass and various types of foliage, including palm trees and bushes, creating a serene and tranquil atmosphere. The scene conveys a sense of calmness and solitude, inviting a peaceful walk through nature.

Cross Seminole Trail, Photo by David Mohaisen

Fan et al.'s Convolutional Seq2Seq Model

https://arxiv.org/pdf/1805.04833

- **Overview**
  - A **complex seq2seq architecture** designed for efficient text generation.
  - **Convolutional-based**, making it **faster** than traditional RNN-based seq2seq models.
  - Incorporates **Gated Multi-Head Multi-Scale Self-Attention** to enhance performance.

- **Key Components**

  1. **Self-Attention for Long-Range Context**
     - Captures dependencies across distant words more effectively than RNNs.
  2. **Gated Attention Mechanism**
     - Selectively filters relevant information for better context retention.
  3. **Multi-Scale Attention Heads**
     - Different heads attend to **fine-grained** and **coarse-grained** information.

Model Fusion & Training Strategy

- **Two-Stage Seq2Seq Model Fusion**
  - **First Seq2Seq Model (Pretraining Phase)**
    - Learns a **general language model (LM)**.
    - Captures **broad syntactic and semantic patterns**.
  - **Second Seq2Seq Model (Conditioning Phase)**
    - Has access to **hidden states from the first model**.
    - Learns to **condition on prompts** for more controlled text generation.
- **Key Benefits**
  - **Improves fluency** by leveraging pretrained general knowledge.
  - **Enhances coherence** by conditioning on prior hidden representations.
  - **More efficient than RNN-based models**, allowing for faster text generation.

Fan et al.'s 2018 Story Generation Dataset

- Released in **2018** by **Fan et al.**
- Collected from **Reddit's WritingPrompts subreddit**.
- Designed to facilitate **story generation** research.
- **Dataset Structure**
  - Each **story** is paired with a **brief writing prompt**.
  - Enables training models to **generate coherent narratives** from short user prompts.
  - Captures a **wide variety of creative writing styles and genres**.

Prompt: The Mage, the Warrior, and the Priest

Story: A light breeze swept the ground, and carried with it still the distant scents of dust and time-worn stone. The Warrior led the way, heaving her mass of armour and muscle over the uneven terrain. She soon crested the last of the low embankments, which still bore the unmistakable fingerprints of haste and fear. She lifted herself up onto the top the rise, and looked out at the scene before her. [...]

Results

- Impressive results

Generation with Fusion of Conv seq2seq + Self-Attention
Example Prompt 1: Aliens start abducting humans
It has been two weeks, and the last of my kind has gone. It is only a matter of time until there will be nothing left. I'm not sure what the hell is going on... I can't think. I can hear a distant scream. I think of a strange, alien sound. I try to speak, but am interrupted by something, something that feels like a drum, I ca not tell. I mean I'm just a little bit older than an average human. But I can, and I can feel the vibrations . I hear the sound of a ship approaching. The ground quakes at the force of the impact, and a loud explosion shatters the silence.
Example Prompt 2: The scientists have discovered something terrible .
The scientist stood there, a little dazed as he stared. "What is it?" He asked. "This...this...Thing...This is a virus. A chemical that can destroy entire planet and it is a very small, complex, chemical that could destroy any planet." The scientist replied. His lab assistant looked down at the tablet. "I've just discovered it. I can't believe it. It looks like it's made of some sort of chemical that's very dangerous." " Well, there's a virus on the ground. It's very effective..." " I can't believe what it is." he said, pointing to the scientist . " We don't know what this thing is. We haven't seen anything like it . We can't even see anything like this. " Dr. Jones stared at the scientist for a moment. "What do you mean what does it do ?" "It...It 's a monster."

- Problems: descriptive (less events/plots), on the same idea even when longer without moving forward to new ideas.

Challenges in Neural LM Story Generation

Challenges in Neural LM Story Generation

- **Fluency vs. Coherence in AI-Generated Stories**
  - Neural **language models (LMs)** can generate **fluent** text.
  - However, they often **lack coherence**, producing:
    - **Meandering narratives** with no clear direction.
    - **Nonsensical plots** lacking logical progression.

- **What's Missing? Stories are not just word sequences**—they are **sequences of events.**
  To generate meaningful stories, an LM must model:
  - **Event Structure & Causality:** Understanding **how events unfold and influence each other**.
  - **Character Development:** Maintaining **consistent personalities, motivations, and relationships**.
  - **State of the World:** Tracking **who/what is where and why** at any point in the story.
  - **Narrative Structure:** Following a logical flow (**exposition → conflict → resolution**).
  - **Good Storytelling Principles:** Avoiding **dropped story elements** or **inconsistent details**.

Event2Event Story Generation

- **What is Event2Event Story Generation?**
  - A **structured approach** to story generation where **events drive the narrative**, rather than predicting one word at a time.
  - Focuses on generating a **sequence of logically connected events** to improve coherence and plot.

✅ **Improves long-term coherence** in storytelling.
✅ **Enables causal reasoning** between story elements.
✅ **More interpretable** than word-based language models.

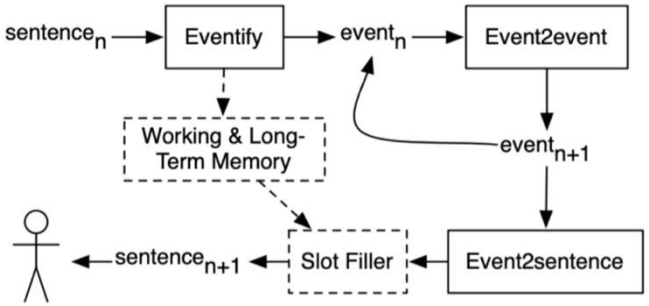

- **Key Components**
  1. **Event Representation**
     - Events are structured as **(subject, action, object, context)** tuples.
     - Example: *(The hero, defeats, the villain, in a final battle).*
  2. **Event Transition Modeling**
     - Predicting **what happens next** based on **causal relationships**.
     - Ensures **logical progression** instead of random word sequences.
  3. **Character & World-State Tracking**
     - Maintains **consistent character motivations, settings, and story elements**.
  4. **Narrative Control**
     - **Plot structures** like **rising action → climax → resolution**.

Structured Story Generation

- **What is Structured Story Generation?**
  - A **controlled approach** to AI-generated storytelling where narratives follow predefined **structures** rather than free-form text generation.
  - Ensures **coherence, logical flow, and character consistency**.

✅ **Prevents incoherent and aimless storytelling**.
✅ **Enhances causal reasoning and long-term plot consistency**.
✅ **Allows user control over narrative flow** (e.g., interactive storytelling, AI-assisted writing tools).

- **Key Components**
  1. **Event-based Planning**
     - Stories are modeled as **sequences of events** rather than word-by-word predictions.
     - Example: *(Hero receives a prophecy → Trains for battle → Faces the antagonist → Triumphs).*
  2. **Character Development & Consistency**
     - AI tracks **personalities, goals, and relationships** over time.
     - Prevents inconsistencies like characters forgetting past events.

Structured Story Generation, cont.

- **Key Components, cont.**
  3. **World-State Management**
     - Maintains a **dynamic world model**, tracking locations, objects, and ongoing events.
     - Ex.: If a castle burns down in chapter 1, it should remain destroyed in chapter 5.
  4. **Narrative Structure Enforcement**
     - Adheres to predefined **story arcs** (e.g., **Exposition → Conflict → Climax → Resolution**).
     - Prevents **meandering plots** by ensuring clear transitions between story phases.
  5. **Hybrid Model Approaches**
     - Combines **neural networks** (e.g., transformers for text generation) with **symbolic AI** (e.g., event graphs, causal modeling).
     - Example: **Event2Event models** + **Plot Graphs** for controlled generation.

Structured Story Generation, cont.

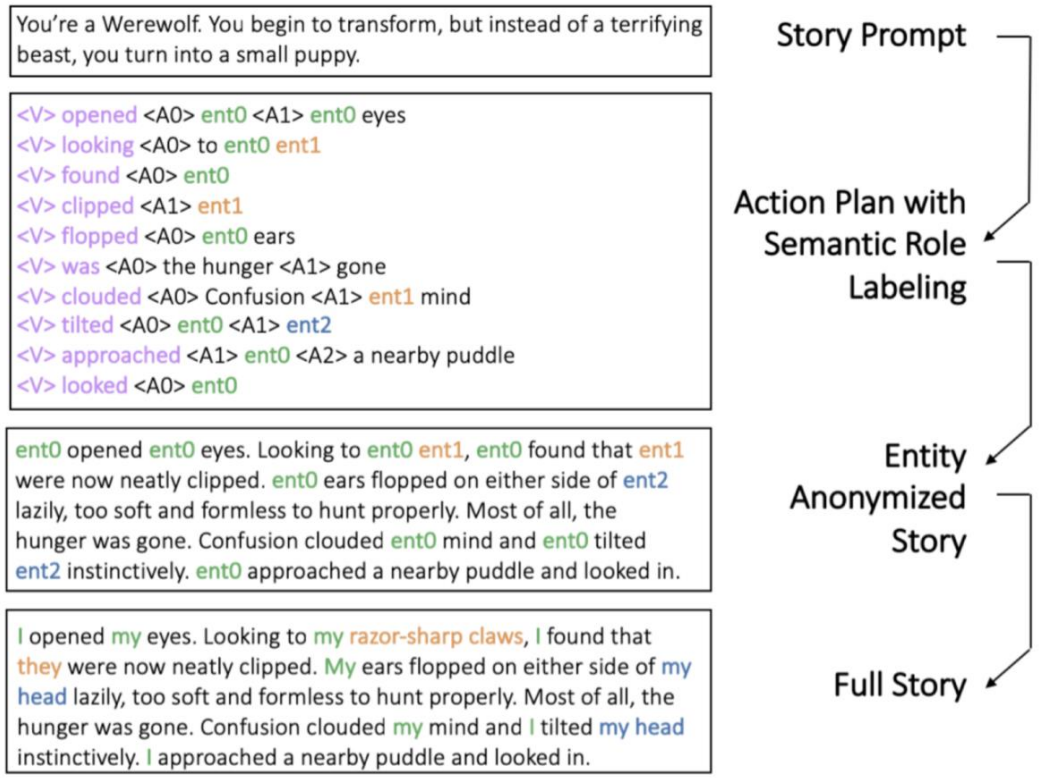

Figure 1: Proposed Model. Conditioned upon the prompt, we generate sequences of predicates and arguments. Then, a story is generated with placeholder entities such as *ent0*. Finally we replace the placeholders with specific references.

Tracking in Neural NLU and NLG

Tracking in Neural NLU and NLG

- **Tracking Events, Entities, and State in NLP**
  - **Neural Natural Language Understanding (NLU)** has seen **significant research** in modeling:
    - **Event Progression**: Understanding how actions unfold over time.
    - **Entity Tracking**: Following characters, objects, or concepts across text.
    - **State Changes**: Capturing updates (e.g., "the door is open" → "the door is closed").

- **Key Research**
  - **Yejin Choi's group** (University of Washington) has made **major contributions** in this field.
  - Their work focuses on **inferring implicit event sequences and reasoning over causal effects**.

Applying State Tracking

- **Challenges in Applying NLU Techniques to NLG**
  - **Generating open-domain stories** while **tracking state** is highly complex.
  - **NLG must not only understand state changes but also predict and generate them coherently**.
- **A More Manageable Approach: Recipe Generation --** Instead of open-ended story generation, **narrow the scope** to structured outputs.
  - **Example:** Given a **list of ingredients**, generate a **step-by-step recipe** while tracking:
    - **Ingredient state** (e.g., raw → chopped → cooked).
    - **Tool usage** (e.g., mixing → baking).
    - **Temporal order** (e.g., don't bake before mixing).
- **Why This Works?**
  - Recipes have a **clear event sequence and state changes**.
  - **Domain constraints** help control and evaluate coherence.
  - Easier to apply **state-aware neural architectures** before scaling to open-domain storytelling.

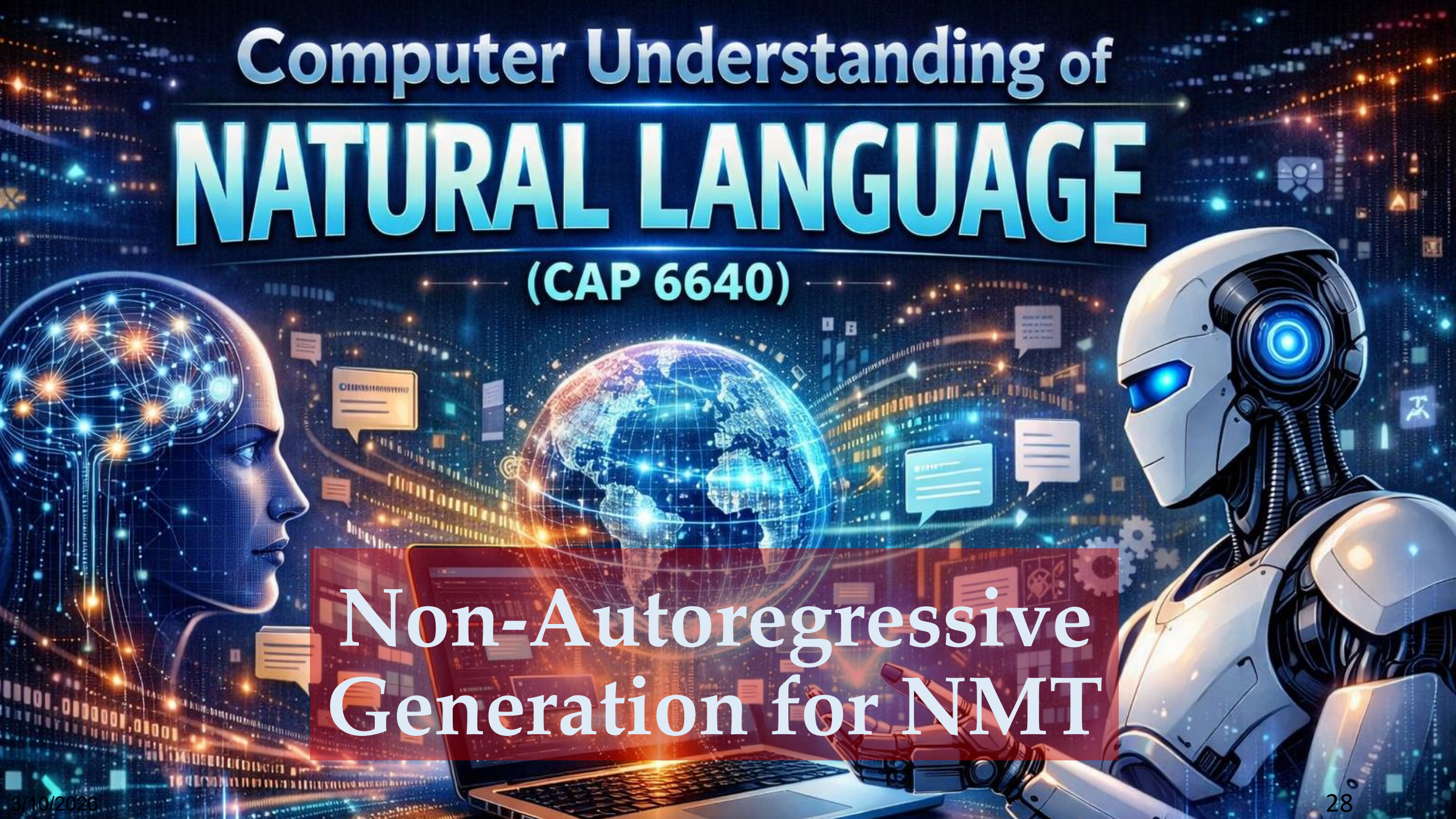

Non-Autoregressive Generation for NMT

Non-Autoregressive Generation for NMT

- **What is Non-Autoregressive NMT (NAT)?**
  - Traditional **autoregressive NMT** (e.g., Transformer) generates words **sequentially**, where each word depends on previous outputs.
  - **Non-autoregressive NMT (NAT)** generates entire sequences **in parallel**, reducing latency and speeding up inference.

Key Advantages of NAT

✅ **Faster inference** due to parallel decoding.
✅ **Eliminates exposure bias** (no dependence on previous incorrect tokens).
✅ **Better suited for real-time applications** (e.g., speech translation, low-latency systems).

Techniques for Non-Autoregressive NMT

- **Masked Language Models (e.g., BERT-style decoding)**
  - Predicts **all tokens at once**, then refines missing or low-confidence words.
  - Ex.: **Levenshtein Transformer** uses insertion and deletion to improve outputs.
- **Latent Variable Models**
  - Introduces a **latent representation** of sentence to guide parallel token generation.
  - Example: **Flow-based NAT models** use probabilistic modeling to generate smooth translations.
- **Iterative Refinement (e.g., CTC-based NAT)**
  - Generates an **initial draft** and refines it through multiple decoding passes.
  - Example: **CMLM (Conditional Masked Language Model)** gradually improves translation quality.

Challenges & Trade-offs

⚠️ **Fluency gap** compared to autoregressive models.

⚠️ **Difficulty in handling long-range dependencies.**

⚠️ **Requires additional refinement steps for accuracy.**

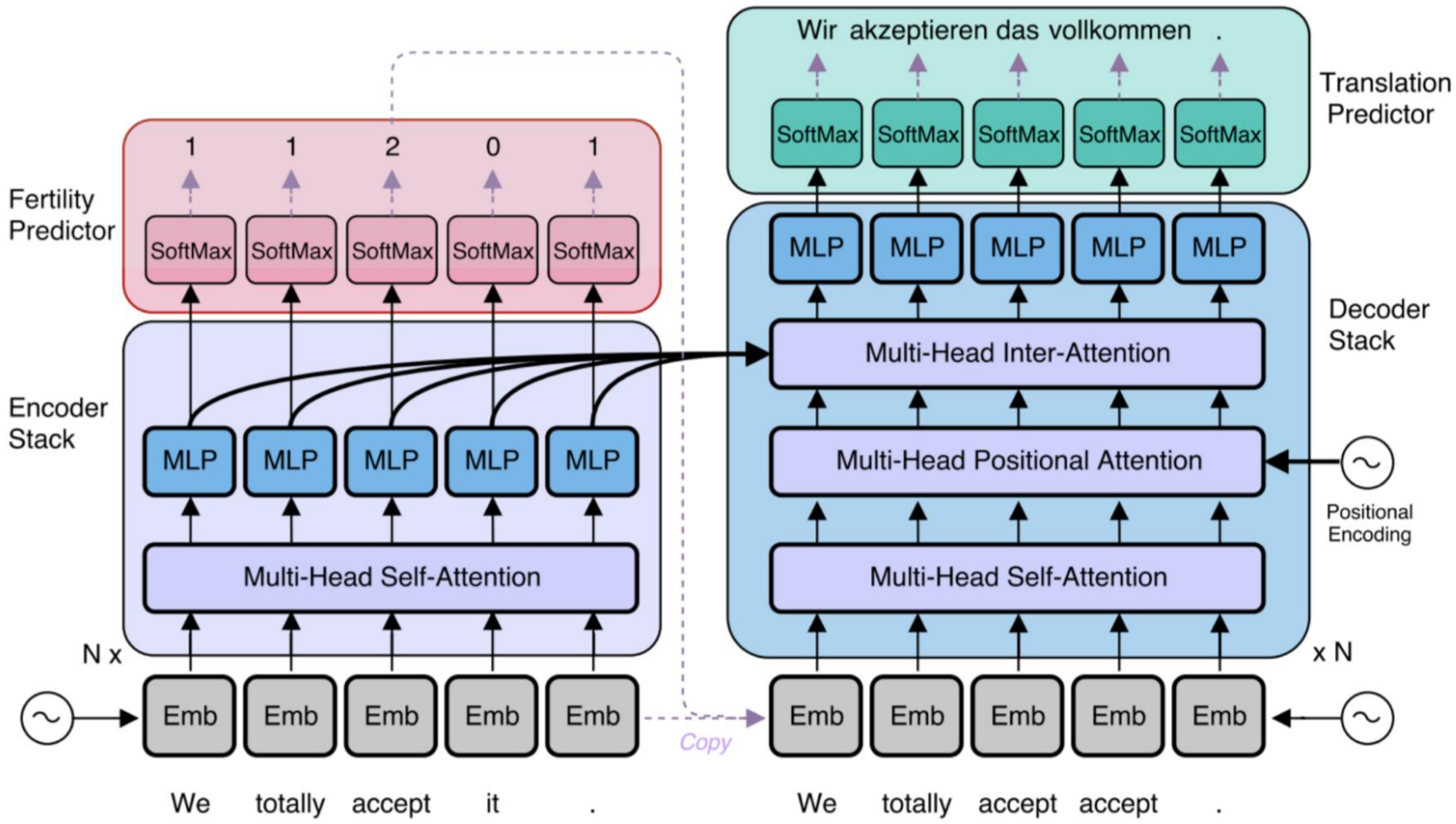

Figure 2: The architecture of the NAT, where the black solid arrows represent differentiable connections and the purple dashed arrows are non-differentiable operations. Each sublayer inside the encoder and decoder stacks also includes layer normalization and a residual connection.

NLG Tasks Evaluation

NLG Tasks Evaluation

- **Common Metrics are Overlap-BaseD:**
  - **BLEU** (Bilingual Evaluation Understudy) – Measures **n-gram overlap**; used in **MT**.
  - **ROUGE** (Recall-Oriented Understudy for Gisting Evaluation) – Compares **generated vs. reference summaries**; common for **summarization**.
  - **METEOR** – Uses **stemming, synonyms, and paraphrases** for alignment than BLEU.
  - **F1 Score** – Evaluates precision & recall of words in **extractive** text tasks.
- **Limitations of Word Overlap Metrics**

Summarization:

🚫 **More open-ended** than MT → multiple valid summaries exist.

🚫 **ROUGE favors extractive over abstractive summaries**, biasing models toward copying text.

Machine Translation (MT):

🚫 Struggles with **paraphrasing & synonyms**.

🚫 Penalizes **valid translations** that use different wording.

NLG Tasks Evaluation, cont.

- **Why These Metrics Fail for Dialogue & Story Generation**
  - **Dialogue Generation**
    - **Responses can vary widely** in wording but still be valid. Example:
      - **Reference:** "Sure, I can help!"
      - **Generated:** "Of course, let me assist!" (low BLEU, but semantically correct).
    - **Fails to capture conversational appropriateness** (e.g., engagement, coherence).
  - **Story Generation**
    - **Multiple valid narratives exist** → exact word matching is meaningless.
    - Lacks evaluation for **plot coherence, character consistency, and causal flow**.

- **Alternatives to Word Overlap Metrics**
  - **BERTScore** – Uses contextual embeddings for **semantic similarity**.
  - **MoverScore** – Captures **word shifts** in meaning using embeddings.
  - **Dialog-Specific Metrics** – Engagement, relevance, and coherence-based human ratings.
  - **Story Evaluation Metrics** – Narrative coherence scoring using structured event modeling.

Automatic Metrics for NLG Evaluation

- Traditional word-overlap metrics (e.g., BLEU, ROUGE) **fail to capture important aspects** of generated text.
- More **focused metrics** help assess specific qualities like **fluency, style, diversity, and relevance**.

- **Fluency:** Measures how **natural** the text sounds.
  - **Method:** Compute **probability under a well-trained Language Model (LM)** (e.g., GPT, LLaMA).
- **Correct Style:** Ensures output follows the **desired tone, formality, or genre**.
  - **Method:** Compute **probability under an LM trained on the target style corpus** (e.g., legal, news, poetry).
- **Diversity:** Evaluates **richness** of vocabulary and **originality** of text.
  - **Method:** Track **rare word usage**, **n-gram uniqueness**, and **entropy-based measures**.

Automatic Metrics for NLG Evaluation

- **Relevance to Input:** Assesses how well the generated text **aligns with the input**.
  - **Method:** Use **semantic similarity scores** (e.g., BERTScore, MoverScore).
- **Basic Structural Metrics**
  - **Length constraints**: Ensures summaries are appropriately concise.
  - **Repetition detection**: Penalizes excessive **word/phrase reuse**.
- **Task-Specific Metrics**
  - Designed for **specific NLP tasks**.
  - **Example: Compression rate** for summarization (output length vs. input length).

Human Evaluation

- **Why Use Human Judgments?**
  - Considered the gold standard for evaluating generated text.
  - Captures aspects that automatic metrics struggle with, such as coherence, relevance, and engagement.
- **Challenges with Human Evaluation**
  - Slow and expensive due to manual effort, making large-scale evaluation impractical.
  - Inconsistent and subjective, as different annotators disagree on what makes text "good."
  - Cognitive limitations, including loss of concentration over long evaluations, misinterpretation of prompts, and inability to justify ratings.
- **Alternatives & Enhancements**
  - Hybrid approaches combine human review with automatic metrics, such as BERTScore plus human validation.
  - Crowdsourcing strategies use aggregation and filtering to reduce variance.
  - Explainable AI for evaluation helps interpret human preferences in scoring.

Summary of Metrics

Metric	Use	Strengths	Weaknesses
Fluency	Measures how natural the text sounds	Captures fluency using well-trained language models	May not fully capture coherence or meaning
Correct Style	Ensures output follows the desired tone, formality, or genre	Uses domain-specific training to enforce style consistency	Requires training on large, high-quality datasets
Diversity	Evaluates richness of vocabulary and originality of text	Encourages variety in generated text and prevents monotony	Hard to define a universally good diversity metric
Relevance to Input	Assesses how well the generated text aligns with the input	Employs semantic similarity measures for accuracy	Can be biased by the similarity metric used
Length Constraints	Ensures summaries are appropriately concise	Prevents overly long or short outputs	Might restrict important content if too strict
Repetition Detection	Penalizes excessive word/phrase reuse	Reduces redundancy in generated text	Might penalize useful repetition (e.g., for emphasis)
Task-Specific Metrics	Designed for specific NLP tasks (e.g., compression rate for summarization)	Provides task-specific evaluation tailored to NLP applications	Limited to predefined tasks and lacks generalization

Key Takeaways

- CQA requires **context tracking, coreference resolution, and multi-turn reasoning**.
- Fluent LMs ≠ coherent stories; structure requires **event modeling and state tracking**.
- Structured generation improves long-term consistency over free-form decoding.
- Non-autoregressive models trade some fluency for **speed and parallelism**.
- Overlap metrics (BLEU/ROUGE) are insufficient; **semantic and human evaluation** remain critical.