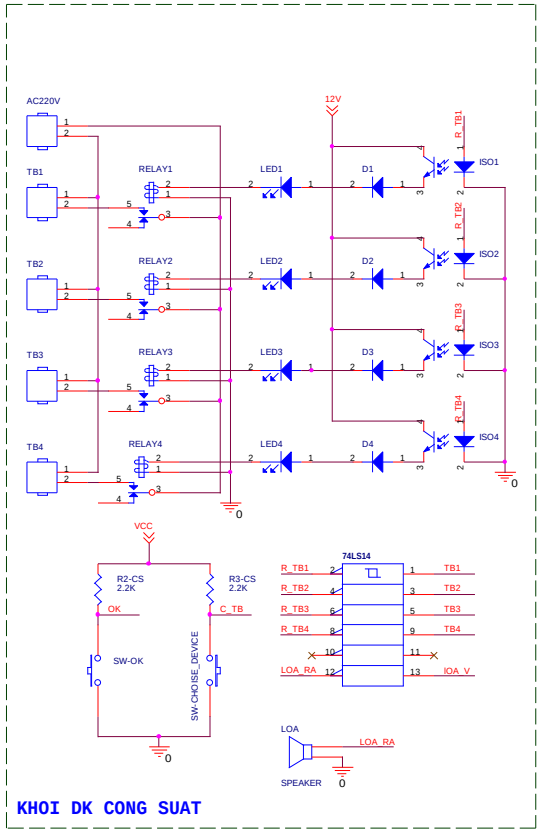

KHOI DK CONG SUAT

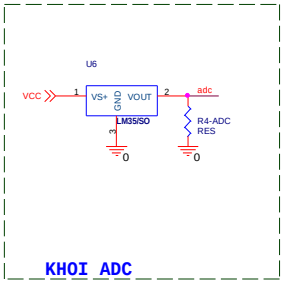

KHOI ADC

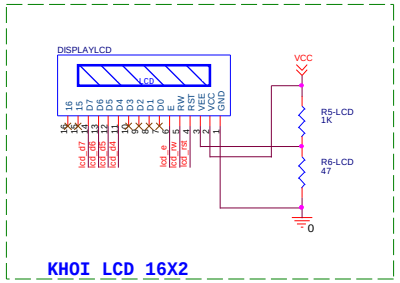

KHOI LCD 16X2

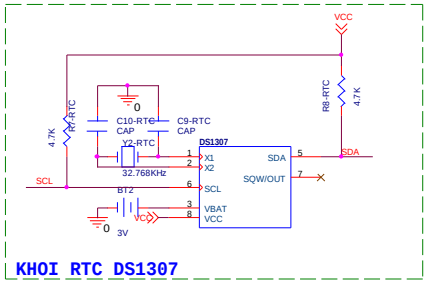

KHOI RTC DS1307

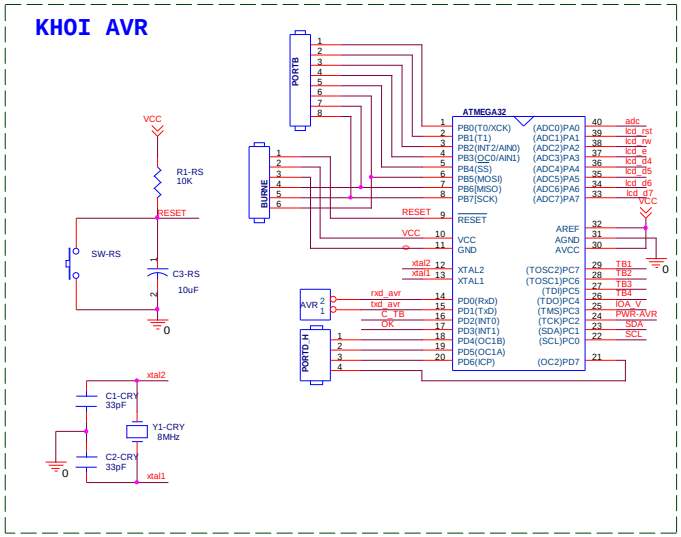

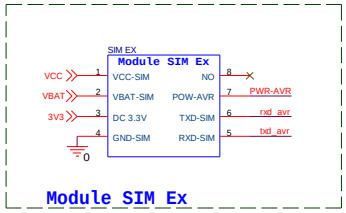

Module SIM Ex

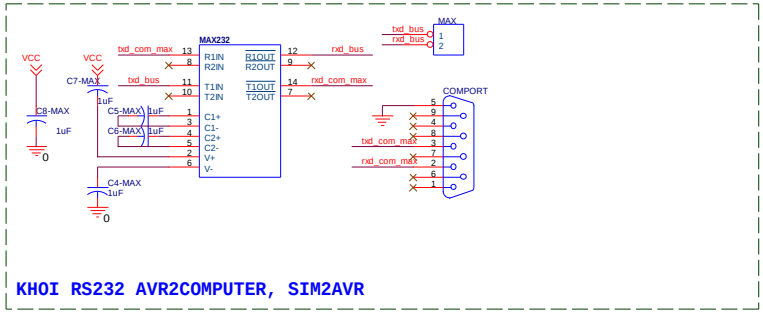

KHOI RS232 AVR2COMPUTER, SIM2AVR

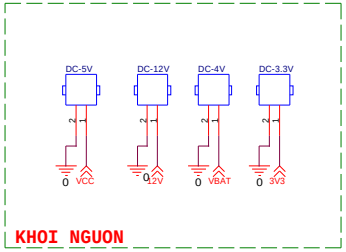

KHOI NGUON

Title	Khoi DK		
Size C	Document Number 001		Rev 001
Date: Friday, December 14, 2012	Sheet 1 of 1		