WP479 (v1.0) June 14, 2016

Xilinx Spartan-6 FPGA DDR3 Signal Integrity Analysis and PCB Layout Guidelines

By: Syed Bokhari (Fidus Systems, Inc.), Romi Mayder (Xilinx, Inc.), and Ravindra Gali (Xilinx, Inc.)

Spartan®-6 devices in conjunction with DDR2/DDR3 DRAMs provide significant memory interface bandwidth, flexibility, and power use efficiency, making them the ideal choice for system designers to address the demands of cost-sensitive, high-volume applications that require optimal performance.

ABSTRACT

In the ongoing endeavor to increase throughput, designers have been increasingly pairing Xilinx® Spartan®-6 FPGAs with high-performance DDR2 and DDR3 memories, constantly pushing the envelope of the speeds at which such devices can operate. In today's mid-range/low-end systems, for example, one might find a Spartan-6 FPGA (-2 or -3 speed grade) moving data to and from a DDR3 memory at up to 800Mb/s. [Ref 2]

As the designer considers turning these dreams of ultra-high throughput into reality, however, a nightmarish design/debug cycle might seem inevitable. This white paper strives to provide designers with a set of pragmatic tools with which to tackle a high-performance design based on Spartan-6 FPGAs.

© Copyright 2016 Xilinx, Inc. Xilinx, the Xilinx logo, Artix, ISE, Kintex, Spartan, Virtex, Vivado, Zynq, and other designated brands included herein are trademarks of Xilinx in the United States and other countries. All other trademarks are the property of their respective owners.

Introduction

Based on system bandwidth requirements, customers can opt for a x4, x8, or a x16 single component DDR2/DDR3 memory interface, as shown in Figure 1.

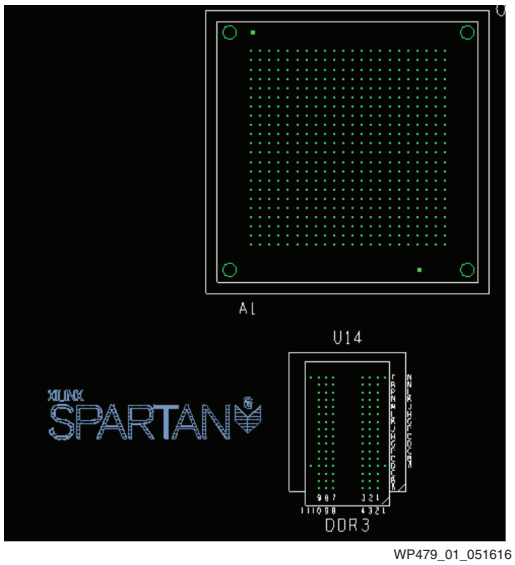

Figure 1: **Implementation of DDR3 Memory**

Successful operation of this interface at the highest possible data rate depends on its own microsystem of components and other factors. These ultimately determine whether the waveform integrity and delay allow the interface to operate as intended. Components and factors that characterize the operation of an FPGA-based DDR2/3 system include driver and receiver buffers, terminations, interconnect impedances, delay matching, crosstalk, and power integrity — this final factor being often overlooked by designers.

A general comparison of the two types is given in Table 1, while the signals common to both DDR2 and DDR3 memories are shown in Figure 2.

Table 1: **Comparative Requirements of DDR2 and DDR3 Memory**

Technology	DDR2	DDR3
Max Clock Frequency (MHz)/Data Rate (Mb/s)	533/1,066	1,066/2,133
Power Requirement		
V_{DD} (Volts)	1.8 ±0.1	1.5 ±0.075
V_{TT} (Volts)	0.9 ±0.04	0.75 ±0.03
V_{REF} (Volts)	0.9 ±0.018	0.75 ±0.015
Delay Matching Requirement		
Match ADDR/CMD/CNTRL to Clock Tightly	Yes	Yes
Match DQ<7,0>, DM0 to DQS0 Tightly	Yes	Yes
Match DQ<15,8>, DM1 to DQS1 Tightly	Yes	Yes
Match DQ<22,16>, DM2 to DQS2 Tightly	Yes	Yes
Match DQ<31,23>, DM3 to DQS3 Tightly	Yes	Yes
Match DQS0-3 to Clock Loosely	Yes	Not Required

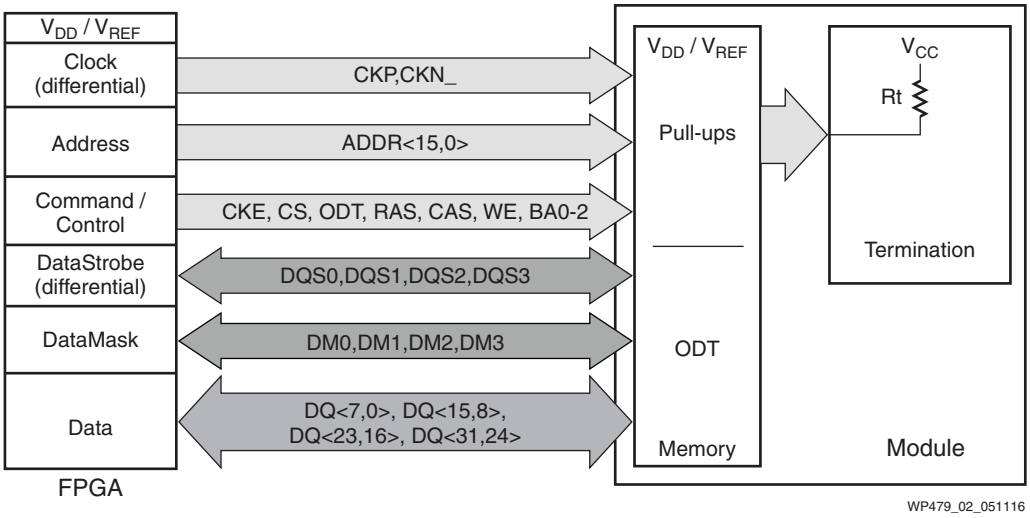

Figure 2: **Architecture and Interface Technology Common to DDR2 and DDR3 Memory**

This document provides guidelines that are applicable to a large majority of designs based on signal integrity (SI) simulations that use IBIS models for Spartan-6 devices. Links to documents containing additional details can be found in the References section.

Waveform Integrity

DQ, DM, and DQS

DQ, DM, and, DQS nets are typically point-to-point connections. These nets are bidirectional, with data being latched on both the rising and falling edges of their associated data strobe signal. Consequently, for a 400MHz data strobe signal, the data rate is 800Mb/s. On-die termination (ODT) is invariably used at the memory device on a WRITE operation, and split termination is activated within the Spartan-6 FPGA during a READ operation to ensure a matched termination for bidirectional high data rate operation.

Data WRITE in Single-Ended DQ and DM Nets

In the WRITE case, the driver is within the FPGA and the receiver is within the SDRAM. The Spartan-6 FPGA provides an SSTL 1.5V I/O standard for implementing DDR3. SSTL 1.5V output buffers are available with untuned output resistance termination values of [no termination], 25Ω, 50Ω, and 75Ω, and V_{CCAUX} values of 2.5V and 3.3V.

For DATA WRITE operations at 800Mb/s, the SSTL15_OT25_LR_33 or SSTL15_II_LR_33 IBIS model can be used as a driver for the FPGA.

Note: LR in the model name refers to the left/right banks; the same buffer is also available for the top/bottom banks.

The SDRAM buffer must provide ODT. Typically, ODT values are selectable between 40Ω and 60Ω, resulting in a common interconnect impedance also in the range of 40Ω–60Ω.

In a typical system, the interconnect trace length is usually kept in the range of 500mils–2,000mils (1mil = 0.001 inch). However, successful operation is possible at lengths up to 6,000mils. Since the circuit is properly terminated, waveform integrity remains excellent over the typical range of trace impedances and lengths. Refer to Figure 3 for typical simulation results for a 800Mb/s random data stream across a trace length of 3,000mils. Figure 3 shows a wide-open data eye that meets all waveform integrity requirements of the DDR3 JEDEC standard [Ref 2] with very little pattern-dependent jitter. Simulation of both Fast and Slow driver cases results in similar waveforms.

Data Write Operation		
Transmitter	**Interconnect**	**Receiver**
SSTL15_II_LR_33	**Impedance = 50Ω** **Length 500mils – 6,000mils**	**ODT 40Ω**

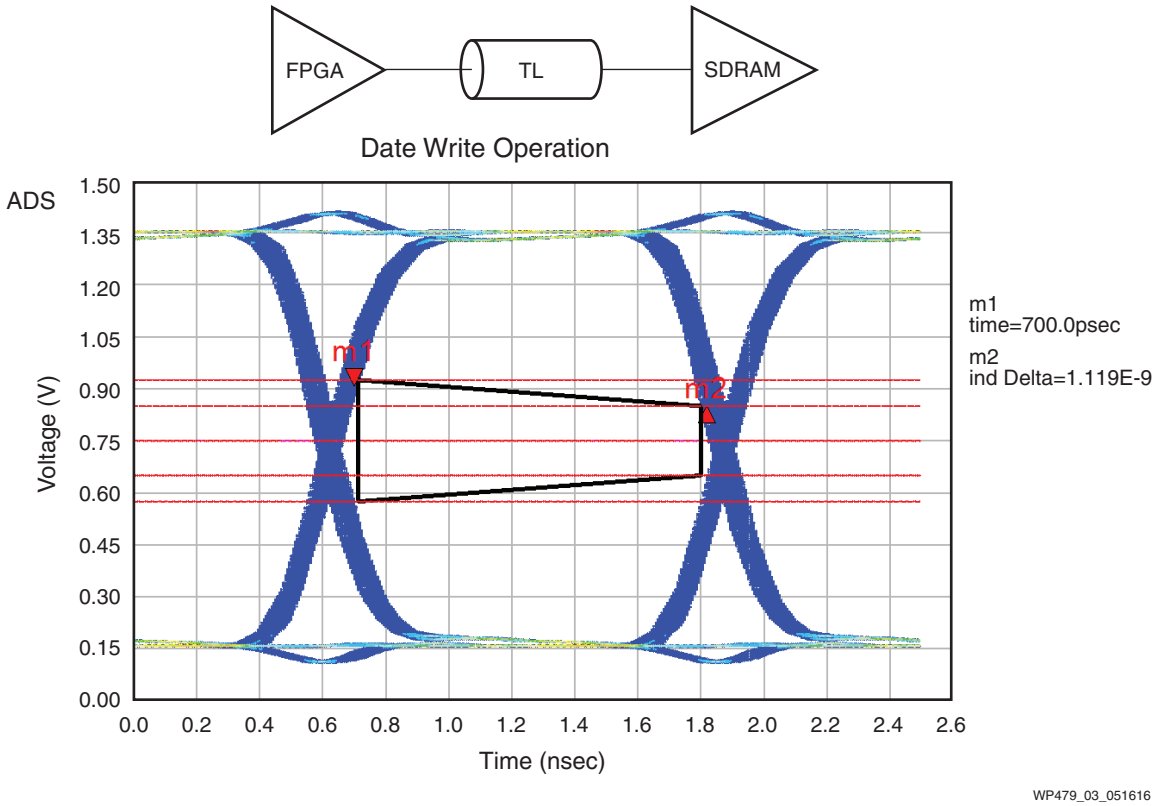

Figure 3: **Data WRITE Operation Recommendations**

Data READ in Single-Ended DQ and DM Nets

In the READ case, the driver is within the SDRAM and the receiver within the FPGA. In this scenario, the Spartan-6 FPGA provides an SSTL I/O standard with a split Thevenin termination. SSTL15_IN50_LR_33 model (1.5V SSTL input buffers with 50Ω of untuned split termination and an auxiliary voltage of 3.3V) can be used on the FPGA. The SDRAM I/O buffers usually provide two different drive strengths identified by their output impedance values, 34Ω and 40Ω. While both lead to nearly identical waveforms, the best noise margin is achieved using the 34Ω driver, which is recommended.

The recommended interconnect impedance and trace lengths are the same as those determined for the WRITE case. Refer to Figure 4 for typical simulation results for a 800Mb/s random data stream across a trace length of 3,000mils. Figure 4 shows a wide-open data eye that meets all waveform integrity requirements of the DDR3 JEDEC standard [Ref 2] with very little pattern-dependent jitter. Simulation of both Fast and Slow driver cases results in similar waveforms.

Data Read Operation		
Transmitter	**Interconnect**	**Receiver**
34Ω SDRAM Driver	**Impedance = 50Ω** **Length 500mils – 6,000mils**	***SSTL15_IN50_LR_33***

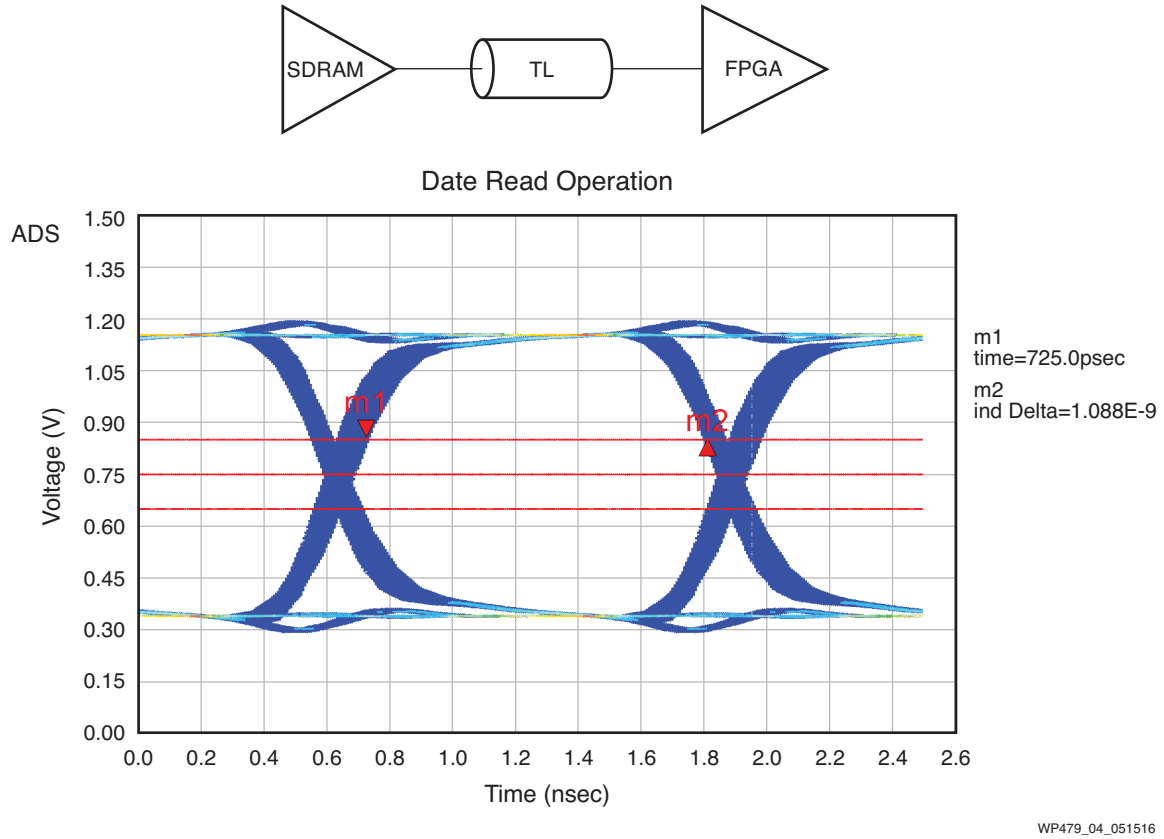

Figure 4: **Data READ Operation Recommendations**

Data WRITE and READ in Differential DQS Nets

To reduce delay uncertainty, the models for both the FPGA and SDRAM must be the same as those used for the DATA signals. The resulting simulations of the DQS nets are shown in Figure 5 and Figure 6 for the WRITE and READ cases, respectively. DQS uses differential technology and the excitation is periodic. As in the DQ and DM nets, trace lengths of 500mils–6,000mils and differential impedances of 80Ω–120Ω are acceptable. In practice within this range, 100Ω of differential impedance is easiest to achieve, and is therefore recommended. It can be seen in Figure 5 and Figure 6 that both rising and falling edges are monotonic and that there is adequate noise margin. Fast and slow driver case waveforms also show similar behavior, and over/undershoot limits are met in all cases.

DQS Write Operation		
Transmitter	**Interconnect**	**Receiver**
***SSTL15_II_LR_33* at Each Output Pin of Diff Pair**	**Diff Impedance = 100Ω Length 500mils – 6,000mils Diff Pair P/N Skew ≤ ±2ps**	**ODT 40Ω at Each Pin of the Differential Pair**

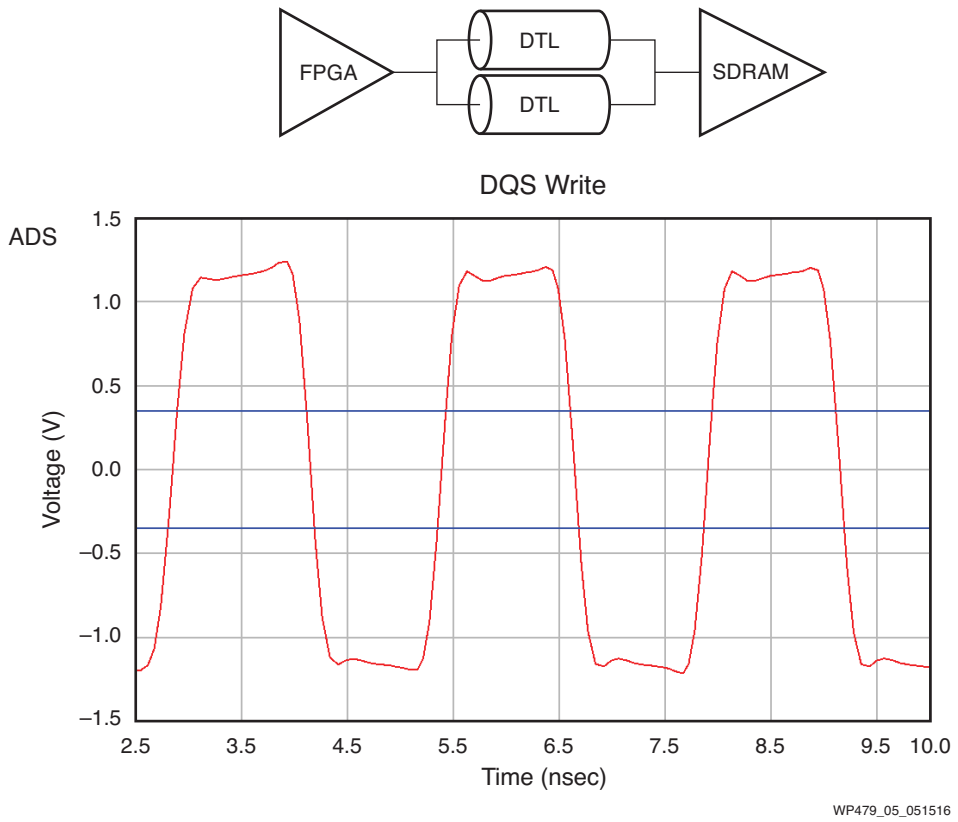

Figure 5: **DQS WRITE Operation Recommendations**

DQS READ Operation		
Transmitter	**Interconnect**	**Receiver**
40Ω SDRAM Driver for Each Output Pin of Diff Pair	**Diff Impedance = 100Ω Length 500mils – 6,000mils Diff Pair P/N Skew ≤ ±2ps**	***SSTL15_II_LR_33***

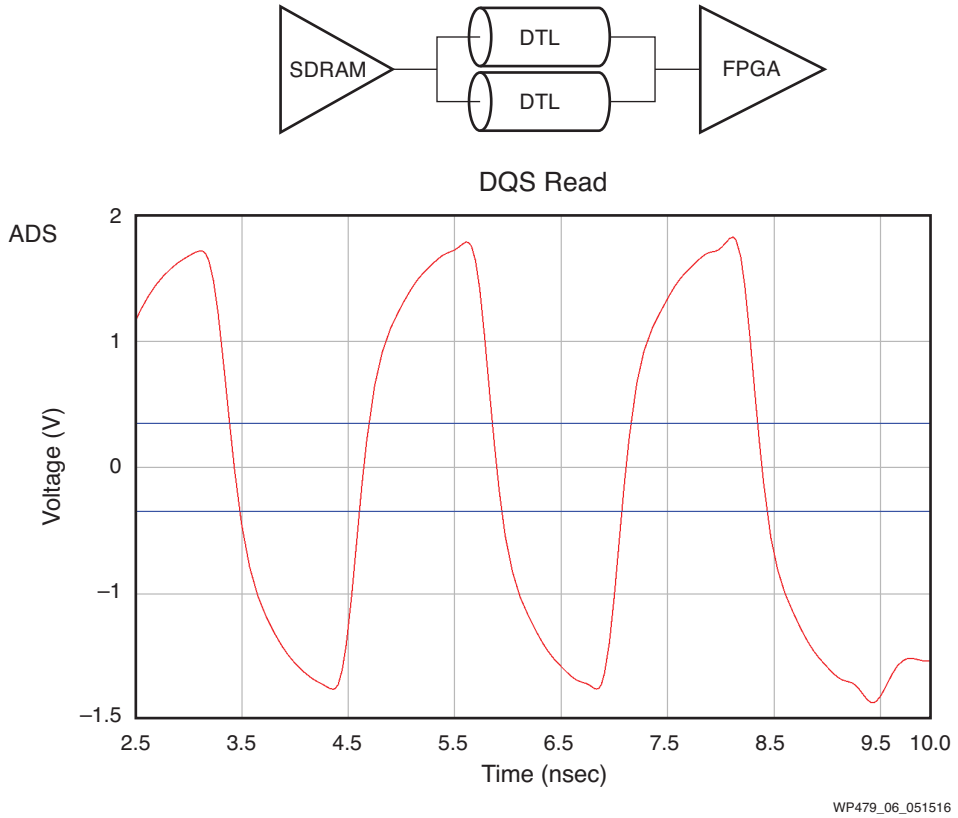

Figure 6: **DQS READ Operation Recommendations**

CLOCK, ADDR, CMD, and CONTROL

Fly-By Topology and Maximum Data Rates

The CLOCK, ADDR (address), CMD (command), and CONTROL nets are typically point-to-multipoint connections and require a unique topology termed *Fly-by*. Fly-by can be envisioned as a daisy-chain connection without stubs. These signals are unidirectional and are driven from the FPGA to the SDRAM. The differential clock net is used as the reference signal for timing analysis. The ADDR, CMD, and CONTROL signals are latched only at the rising edge of the positive clock signal; consequently, the maximum effective data rate is 400Mb/s for a 400MHz clock signal.

External Termination

ODT is not available for these nets, and an external discrete termination is required. The recommended form typically consists of a resistor placed at the far end, past the last memory device, and pulled up to ½V_{DD}. The value of the pull-up resistor and the impedance of the interconnecting traces depend on the number of devices on the net. These values are optimized through simulation. A single-ended trace impedance of 50Ω and a pull-up resistor value of 50Ω is adequate for the ADDR, CMD, and CONTROL nets in most cases. The RESET and CKE signals are not terminated. [Ref 2] For the CLOCK differential pair, a trace differential impedance of 100Ω and the use of two separate pull-up termination resistors of 50Ω is recommended.

For these unidirectional signals, Spartan-6 FPGAs provide an SSTL I/O standard (IBIS model name: *SSTL15_II_LR_33*). The memory devices also have a unique input buffer at the receiver. The interconnecting trace can be broken down into two parts:

- TL1 between the FPGA and the memory device
- TL2 between the memory device and the termination

Typical waveforms along with the interconnecting trace topology are shown in Figure 7 and Figure 8.

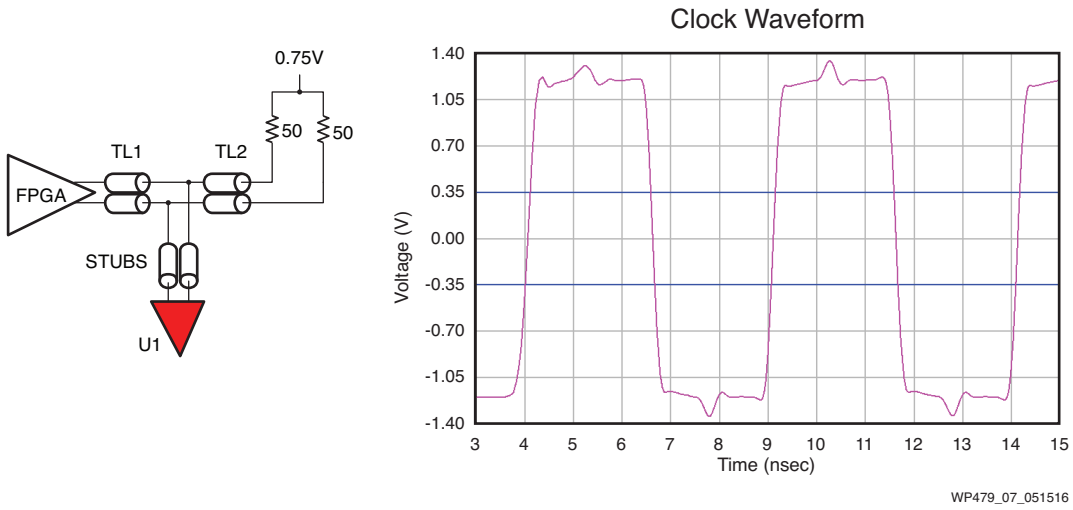

Figure 7: **CLOCK WRITE Operation Recommendations**

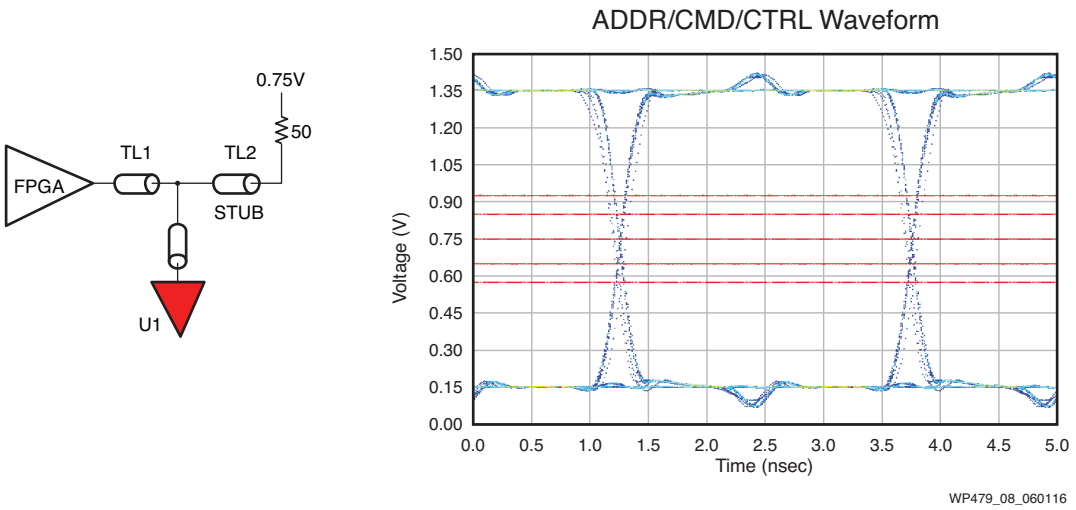

Figure 8: **ADDR, CMD, and CNTRL WRITE Operation Recommendations**

A short stub is present at each memory device pin. Simulations show that optimal waveform integrity is achieved when the length of TL1 and the stubs are *kept as short as possible*. Typical practical values are 1,000mils–3,000mils for TL1, and less than 100mils for the stubs. Simulated results shown in Figure 7 and Figure 8 derive from values of:

- TL1 = 3,000mils
- Stub Length = 100mils

Figure 8 shows a wide-open data eye that meets all waveform integrity requirements of the DDR3 JEDEC standard [Ref 2] with very little pattern-dependent jitter. Simulation of both fast and slow driver cases results in similar waveforms.

Delay Matching of Signal Nets

While trace length, impedance, and terminations can be designed for optimal waveform integrity, it is also important to ensure that the delay between synchronous nets be matched very closely. All DQ and DM nets in a byte lane must be matched to their associated DQS nets.

To maximize timing margins, it is recommended that the transmission line of a DQ/DM net be matched to its associated DQS net within ± 5ps, which is easily achievable.

For unidirectional signals, all ADDR, CMD, and CONTROL signals must be matched to the CLOCK signal.

Minimizing trace and stub length is critical in PCB layout. Any increase in these lengths above recommendations increases the delay uncertainty. Since the data rate of these nets is lower, a relative delay tolerance of ± 25ps at the receiver is recommended.

Further, *piece-wise delay matching* is preferred: that is, each transmission line segment — for example, DTL1 on the clock — must be matched to the corresponding transmission line segment TL1 on the ADDR, CMD, and CONTROL nets. A summary of the delay matching requirement is given

in Table 2 and Table 3.

Table 2: **Delay Matching Requirement for Figure 1**

Net/Group	Topology	Match	To	Tolerance (±ps)
Clock	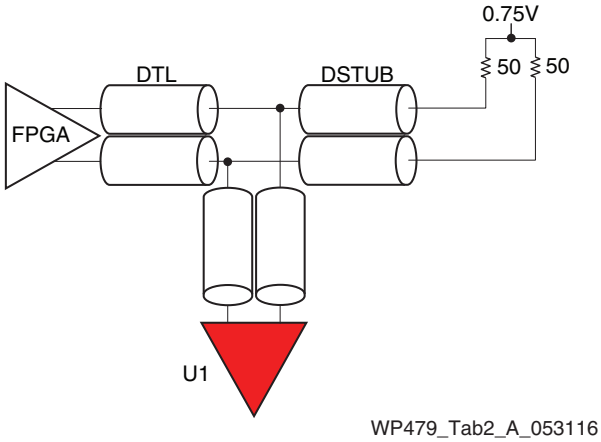 Treat as Master			
ADDR[0-15], CKE, CS, ODT, RAS, CAS, WE, BA[0-2]/ADDR	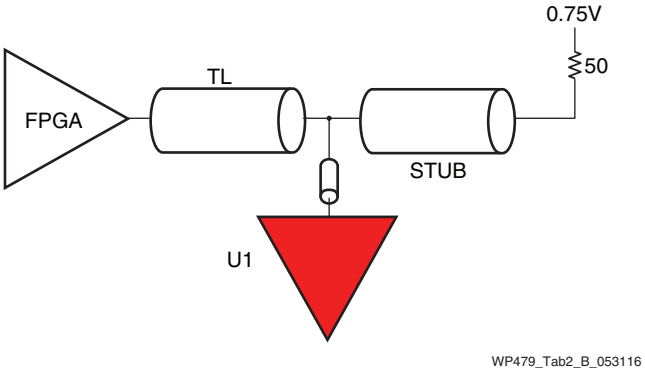	TL STUB	DTL DSTUB	5 2
DQS[0]/Byte_0	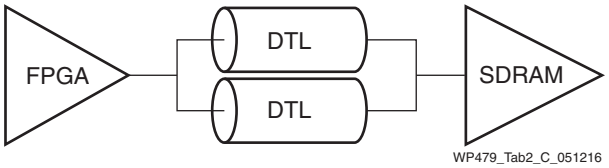 Treat as Master			
DQ[0-7], DM[0]	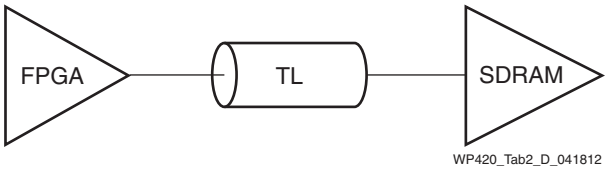	TL	DTL	5
DQS[n]/Byte_n	Use same rule as for group Byte0. DQS[0-3] need not match to each other.			

To ensure a matched delay, trace length matching is carried out during PCB layout. It is important to pay attention to four important factors (Figure 11) that require compensation.

- Depending on the FPGA pin assignment, a substantial amount of skew within the package traces can exist. This should be compensated for on the PCB by appropriate lengthening or shortening of the associated PCB traces. Package trace lengths of each Spartan-6 FPGA are available using the Xilinx PARTGen utility. The length in millimeters should be converted to a time delay value in picoseconds by multiplying it by 6.5. [Ref 2]
- The velocity of propagation of a microstrip trace *cm* is greater than that of a strip line trace *cs*. Consequently, velocity compensation is required when traces in a group are routed as both microstrip (exposed) traces of total length *lm* and stripline (buried) traces of total length *ls*. The total delay is $((lm/cm) + (ls/cs))$.

  Advanced PCB layout software has features to compute the total delay based on the trace type, making this requirement easy to ensure. Otherwise, compensation must be implemented by computing the total delay and then elongating or shortening the microstrip or stripline parts appropriately.

- Bending traces in a trombone shape is a simple technique to increase trace length. However, the electrical delay of a trombone-shaped trace is smaller than that of a straight trace due to coupling between the parallel trace segments. This coupling can be reduced by ensuring that the spacing between parallel segments (L3 in Figure 9) is, in most cases, ≥25 mils.

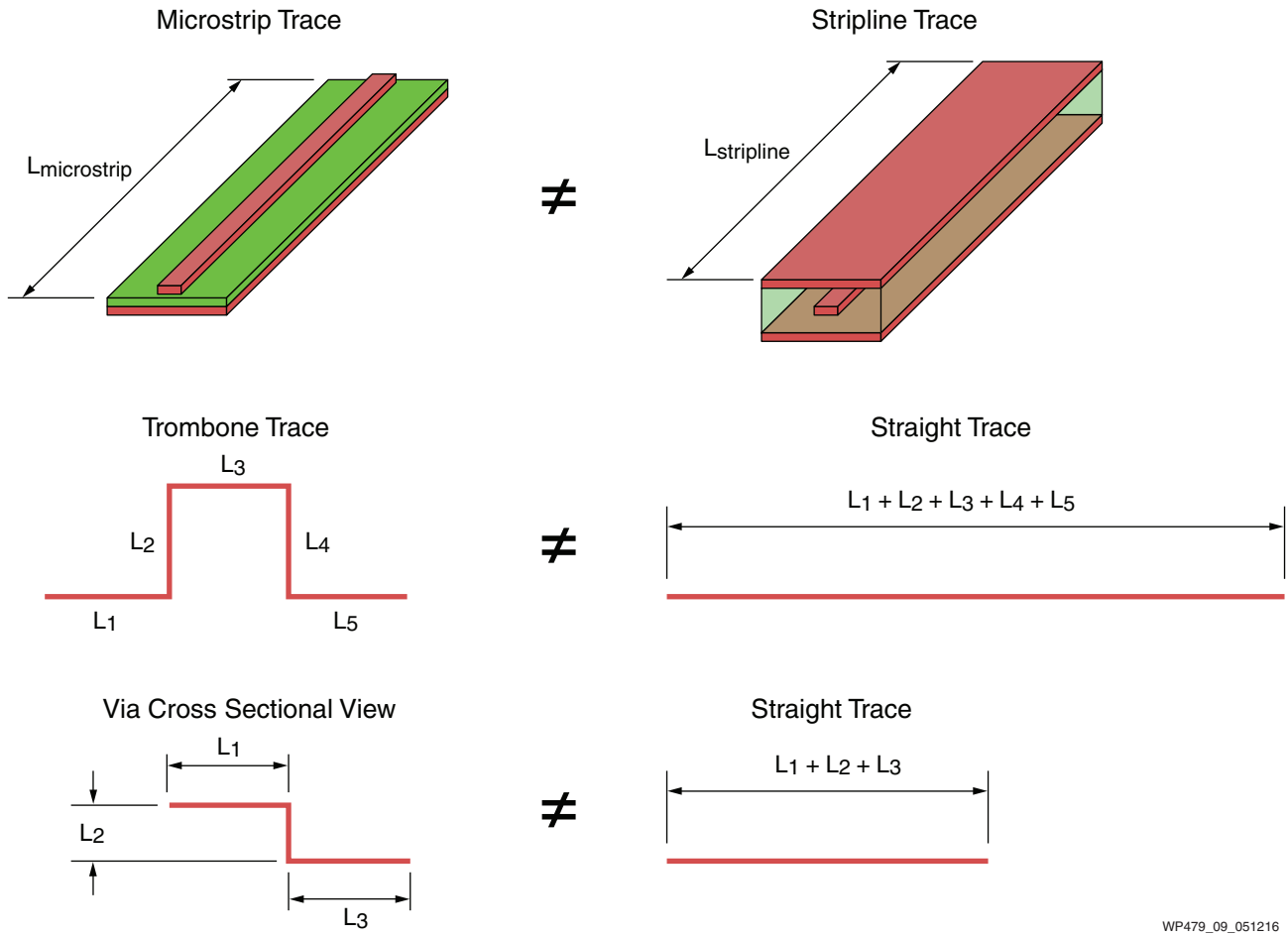

Figure 9: **Factors Leading to Differences in Delay**

- Layer-jumping using vias is typically unavoidable. The delay of a trace containing a via is greater than that of a straight trace by about 10ps. This arises from the loading effect of a via; it depends upon the geometric parameters of the via, anti-pad, layer stackup, and the location of return vias.

  It is recommended that GND planes be used as reference planes for all signals, in which case the return via is a GND via. Consequently, it is important to ensure that a signal via has at least one GND via in close proximity. The ideal situation is where each signal via is surrounded by four closely spaced GND vias leading to what is termed a *controlled impedance via*. However, this is often impractical for dense layouts. It is acceptable to place a few GND vias close to the region of signal vias. Further, all ADDR, CMD, and CONTROL nets can be referenced to a V_{DD} power plane if needed.

Mitigating Potential Crosstalk and Power Integrity Problems

Crosstalk adds to jitter. Jitter reduces the eye opening, which then leads to data dependency. This can become significant for single-ended data traces if they are routed as microstrip lines.

Trace Spacing

Crosstalk is reduced by increasing the spacing between adjacent traces in long parallel runs. This has the drawback of increasing the total trace length; therefore, a reasonable value must be chosen.

The distance between a trace and its nearest reference plane (*dr*) plays an important role in this determination. Typically, the edge-to-edge spacing between traces should be > 2*dr* for stripline traces and > 7*dr* for microstrip traces. Increasing the number of GND vias and maximizing the use of stripline routing is recommended to help keep crosstalk levels manageable. The same trace-spacing rule is also applicable to differential signals, such as the clock and DQS.

Maintaining Power Integrity

In the context of this white paper, power integrity refers to meeting the circuit board's power supply tolerance requirements (see Table 1) under worst-case (maximum) switching conditions. Failure to address this requirement can lead to a number of problems, such as increased jitter and crosstalk, all of which eventually reduce timing margins. This, in turn, ultimately forces reduced data-rate operation.

Decoupling theory is very well understood, and usually starts with definition of a target impedance that must be met over a predetermined frequency range. [Ref 3][Ref 4] The three power rails of concern are the V_{DD}, V_{TT}, and V_{REF}. The tolerance requirements on the V_{DD} and V_{TT} rails can be met in several different ways; using a shape on a plane layer with the required number of decoupling capacitors of three to five different values is recommended. It is important to design the capacitor pad mounting structure for minimal mounted inductance. [Ref 3][Ref 4]

The V_{REF} rail has a tighter tolerance than V_{DD} and V_{TT}; fortunately, it draws very little current. Its target impedance is easily met using narrow traces and one or two decoupling capacitors in the range of 0.01–0.1µF. *It is important that these capacitors be placed very close to the device pins.*

Guidelines for Implementation

PCB Layer Stackup

Achieving a good balance between cost, performance, and complexity is the ultimate goal when defining any PCB layer stackup. This potentially iterative task is limited, however, because the layer count is almost always driven by the breakout requirements of the Spartan-6 FPGA package and of other high-density component packages in the design. In Figure 10 and Figure 11, 12-layer and 14-layer examples are shown as an optimal starting stackup that can be conveniently expanded, if required, to accommodate more layers.

12-Layer Stackup

The 12-layer stackup model shown in Figure 10 is constructed with low-cost, RoHS-suitable FR4 material with an assumed relative permittivity of 4.2. The computed trace widths and spacings shown provide an easily realizable single-ended impedance of 50Ω and a differential impedance of 100Ω. The stackup uses solid GND planes as references for all routing layers to ensure uniform trace impedance. Where "layer-jumping" is necessary, return path continuity is easily achieved by inserting GND vias close to the signal vias.

Power layers are located in the middle of the board, sandwiched by solid GND planes. This enables power-plane splitting without affecting signal routing. In addition, this topology allows convenient placing of decoupling capacitors on either the top or bottom layer of the board, as the effective length of their vias is nearly the same.

Layer	Thickness	Drill	Cross Section Diagram	Layer	Layer	Single-Ended Line		Impedance	Edge-Coupled Diff	
#	(mils)			Type	Definition	Width(mils)	Impedance	Ref. Layer	Width Space	Impedance
	0.5			*mask*						
	1.4			*plating*						
L01	0.600			*foil*	TOP	7.0	50.0 Ω	L02	5W 9 sp	100.0Ω
	5.0			*Prepreg*						
L02	0.6				GND1					
	5.0			*0.5/0.5 Core*						
L03	0.6				SIG1 - X	5.5	50.0 Ω	L02,L05	5W 10sp	100.0Ω
	4.0			*Prepreg*						
L04	0.6				SIG2 - Y	5.5	50.0 Ω	L02,L05	5W 10sp	100.0Ω
	5.0			*0.5/0.5Core*						
L05	0.6				GND2					
	4.0			*Prepreg*						
L06	0.6				PWR1-SPLIT					
	5.0			*0.5/0.5 Core*						
L07	0.6				PWR2-SPLIT					
	4.0			*Prepreg*						
L08	0.6				GND3					
	5.0			*0.5/0.5 Core*						
L09	0.6				SIG3 - X	5.5	50.0 Ω	L08,L11	5W 10sp	100.0Ω
	4.0			*Prepreg*						
L10	0.6				SIG4 - Y	5.5	50.0 Ω	L08,L11	5W 10sp	100.0Ω
	5.0			*0.5/0.5 Core*						
L11	0.6				GND4					
	5.0			*Prepreg*						
L12	0.600			*foil*	BOTTOM	7.0	50.0 Ω	L11	5W 9 sp	100.0Ω
	1.4			*plating*						
	0.5			*mask*						
Total:	62		Finish thickness +-10%							

WP479_10_051216

Figure 10: **12-Layer PCB Stackup with FR4 Dielectric**

Dual stripline construction is employed to reduce layer count. Routing in these layers should be perpendicular for crosstalk reduction. This layer stackup is a reasonably low-cost, easy-to-use, practical solution for many medium-complexity designs.

Nevertheless, the designer must always be aware of excessive trace parallelism — for example, when designing with a DIMM. In such a case, it is better to use *single stripline* construction, shown in the 14-layer stackup in Figure 11.

14-Layer Stackup

Layer #	Thickness (mils)	Drill	Cross Section Diagram	Layer Type	Layer Definition	Single-Ended Line Width (mils)	Single-Ended Line Impedance	Impedance Ref. Layer	Edge-Coupled Diff Width Space	Edge-Coupled Diff Impedance
	0.5			mask						
	1.4			plating						
L01	0.600			foil	TOP	8.0	50.0 Ω	L02	6W 9sp	100.0 Ω
	5.0			Prepreg						
L02	0.6				GND1					
	4.0			0.5/0.5 Core						
L03	0.6				SIG1	4.0	50.0 Ω	L02,L04	3.5W 10sp	100.0 Ω
	4.0			Prepreg						
L04	0.6				GND2					
	4.0			0.5/0.5Core						
L05	0.6				SIG2	4.0	50.0 Ω	L04,L06	3.5W 10sp	100.0 Ω
	4.0			Prepreg						
L06	0.6				GND3					
	2.0			ZBC2000						
L07	0.6				PWR1-SPLIT					
	4.0			Prepreg						
L08	0.6				PWR2-SPLIT					
	2.0			ZBC2000						
L09	0.6				GND4					
	4.0			Prepreg						
L10	0.6				SIG3	4.0	50.0 Ω	L09,L11	3.5W 10sp	100.0 Ω
	4.0			0.5/0.5 Core						
L11	0.6				GND5					
	4.0			Prepreg						
L12	0.6				SIG4	4.0	50.0 Ω	L11,L13	3.5W 10sp	100.0 Ω
	4.0			0.5/0.5 Core						
L13	0.6				GND6					
	5.0			Prepreg						
L14	0.600			foil	BOTTOM	8.0	50.0 Ω	L13	6W 9sp	100.0 Ω
	1.4			plating						
	0.5			mask						
Total:	62		Finish thickness +-10%							

WP420_14_041812

Figure 11: **14-Layer PCB Stackup with Nelco 4000-13EP or Isola FR408HR Dielectric**

The 14-layer stackup model shown in Figure 11 uses material with a lower dielectric constant, such as Nelco 4000-13EP or Isola FR408HR. The required trace impedances are conveniently realized using common trace widths. Improved power integrity can be expected with this model compared to the 12-layer stackup. This is attributed to the use of thinner dielectric layers between the power and ground planes, resulting in high-frequency decoupling benefits.

Due to individual process and material variation, the displayed stackups must be reviewed, verified, and potentially altered by the PCB shop prior to fabrication.

BGA Breakout Optimization

In high-density designs, following placement, land pattern breakout is often the most time-consuming part of the layout process. Breakout is defined as the planned escape from the package pin to outside of the package body (for example, the BGA pad array). In the context of DDR2 and DDR3 connectivity to Spartan-6 FPGAs, this consists of associating the appropriate FPGA pin with the appropriate DDR2/DDR3 signal within the limitations imposed by the FPGA pin mapping. [Ref 2] With the flexibility of the Spartan-6 FPGAs, this is most easily done by first placing components in the desired location on the board and then routing (optimally) backwards from the discrete SDRAM towards the FPGA, stopping the routes just short of the previous breakout demarcation points. The FPGA pins can then be carefully swapped to ensure that the route can be completed with little or no crossover.

Completing Placement and Routing

After an appropriate stackup and optimized BGA breakout is established, critical components are then placed.

V_{REF} decoupling capacitors should be placed close to the device pins. V_{TT} pull-up resistors and decoupling capacitors can be grouped near the last memory. Smaller value V_{DD} decoupling capacitors can be distributed near the pins of each device. *Pay careful attention to the placement of these components to avoid blocking routing channels.* Larger value and bulk decoupling capacitors can be placed at convenient locations away from most routing.

All decoupling capacitors should use a reduced-inductance footprint. [Ref 3][Ref 4]
A reduced-inductance footprint is typically realized using two short wide traces from each pad perpendicular to the capacitor length, pinned down with a low-inductance via. For identification and certainty of deployment, a reduced inductance footprint can be assigned within the schematic and driven into the layout through the netlist. The board file should be set up for trace impedance, min-max length, delay matching, and spacing constraints, as described in sections Waveform Integrity and Delay Matching of Signal Nets. First, attempt coarse routing with reduced stub length using the minimum trace spacing required to meet crosstalk rules; then, implement fine length matching, ensuring that multiple ground vias are inserted where signal traces jump layers.

Verification Checklist

Table 3: **Verification Checklist**

	Task	Verified
1	All decoupling capacitors use a reduced-inductance footprint	✓
2	V_{REF} decoupling capacitors are placed close to V_{REF} pins	✓
3	Trace widths and spacings produce the correct impedance	✓
4	Correct P/N skew constraints exist on all differential pairs	✓
5	CLOCK ADDR delays match tolerance	✓
6	DQS/DATA and DM delays match tolerance for all byte lanes	✓
7	GND vias are present near signal vias	✓
8	Adequate spacing exists between parallel traces of a meander line	✓
9	Reference planes are solid GND and do not contain large slits or slots	✓

Conclusion

Xilinx Spartan-6 devices are proven to interoperate with DDR2/3 speeds at up to 800Mb/s. The purpose of this white paper has been to illustrate best practices and design guidelines to optimize I/O performance and reduce risk of performance issues in first-article prototypes. For additional information or design support, contact your Authorized Xilinx Distributor or Fidus Systems, Inc.

References

1. Xilinx: UG388, *Spartan-6 FPGA Memory Controller User Guide*
2. JEDEC: JESD79-3, *DDR3 SDRAM Standard*
3. Xilinx: UG393, *Spartan-6 FPGA PCB Design and Pin Planning Guide*
4. Xilinx: WP411, *Simulating FPGA Power Integrity Using S-Parameter Models*

Revision History

The following table shows the revision history for this document:

Date	Version	Description of Revisions
06/14/2016	1.0	Initial Xilinx release.

About Fidus Systems

Fidus Systems, a Xilinx Premier Design Services Alliance Member, provides Electronic Product Development, Staff Augmentation, and Consulting Services to companies across a wide range of industries. Fidus' extensive experience includes System Level, FPGA/DSP, RF/Wireless, Signal/Power Integrity, Hardware, PCB Layout, Embedded Software, and Mechanical Design. As a design partner, Fidus offers companies greater flexibility and capability in their product development with access to the expertise, process, and tools to successfully move their products to market. Fidus has delivered on more than 800 products and projects for 215 customers across North America. For more information, please visit www.fidus.com.

Disclaimer

The information disclosed to you hereunder (the "Materials") is provided solely for the selection and use of Xilinx products. To the maximum extent permitted by applicable law: (1) Materials are made available "AS IS" and with all faults, Xilinx hereby DISCLAIMS ALL WARRANTIES AND CONDITIONS, EXPRESS, IMPLIED, OR STATUTORY, INCLUDING BUT NOT LIMITED TO WARRANTIES OF MERCHANTABILITY, NON-INFRINGEMENT, OR FITNESS FOR ANY PARTICULAR PURPOSE; and (2) Xilinx shall not be liable (whether in contract or tort, including negligence, or under any other theory of liability) for any loss or damage of any kind or nature related to, arising under, or in connection with, the Materials (including your use of the Materials), including for any direct, indirect, special, incidental, or consequential loss or damage (including loss of data, profits, goodwill, or any type of loss or damage suffered as a result of any action brought by a third party) even if such damage or loss was reasonably foreseeable or Xilinx had been advised of the possibility of the same. Xilinx assumes no obligation to correct any errors contained in the Materials or to notify you of updates to the Materials or to product specifications. You may not reproduce, modify, distribute, or publicly display the Materials without prior written consent. Certain products are subject to the terms and conditions of Xilinx's limited warranty, please refer to Xilinx's Terms of Sale which can be viewed at http://www.xilinx.com/legal.htm#tos; IP cores may be subject to warranty and support terms contained in a license issued to you by Xilinx. Xilinx products are not designed or intended to be fail-safe or for use in any application requiring fail-safe performance; you assume sole risk and liability for use of Xilinx products in such critical applications, please refer to Xilinx's Terms of Sale which can be viewed at http://www.xilinx.com/legal.htm#tos.

Automotive Applications Disclaimer

XILINX PRODUCTS ARE NOT DESIGNED OR INTENDED TO BE FAIL-SAFE, OR FOR USE IN ANY APPLICATION REQUIRING FAIL-SAFE PERFORMANCE, SUCH AS APPLICATIONS RELATED TO: (I) THE DEPLOYMENT OF AIRBAGS, (II) CONTROL OF A VEHICLE, UNLESS THERE IS A FAIL-SAFE OR REDUNDANCY FEATURE (WHICH DOES NOT INCLUDE USE OF SOFTWARE IN THE XILINX DEVICE TO IMPLEMENT THE REDUNDANCY) AND A WARNING SIGNAL UPON FAILURE TO THE OPERATOR, OR (III) USES THAT COULD LEAD TO DEATH OR PERSONAL INJURY. CUSTOMER ASSUMES THE SOLE RISK AND LIABILITY OF ANY USE OF XILINX PRODUCTS IN SUCH APPLICATIONS.