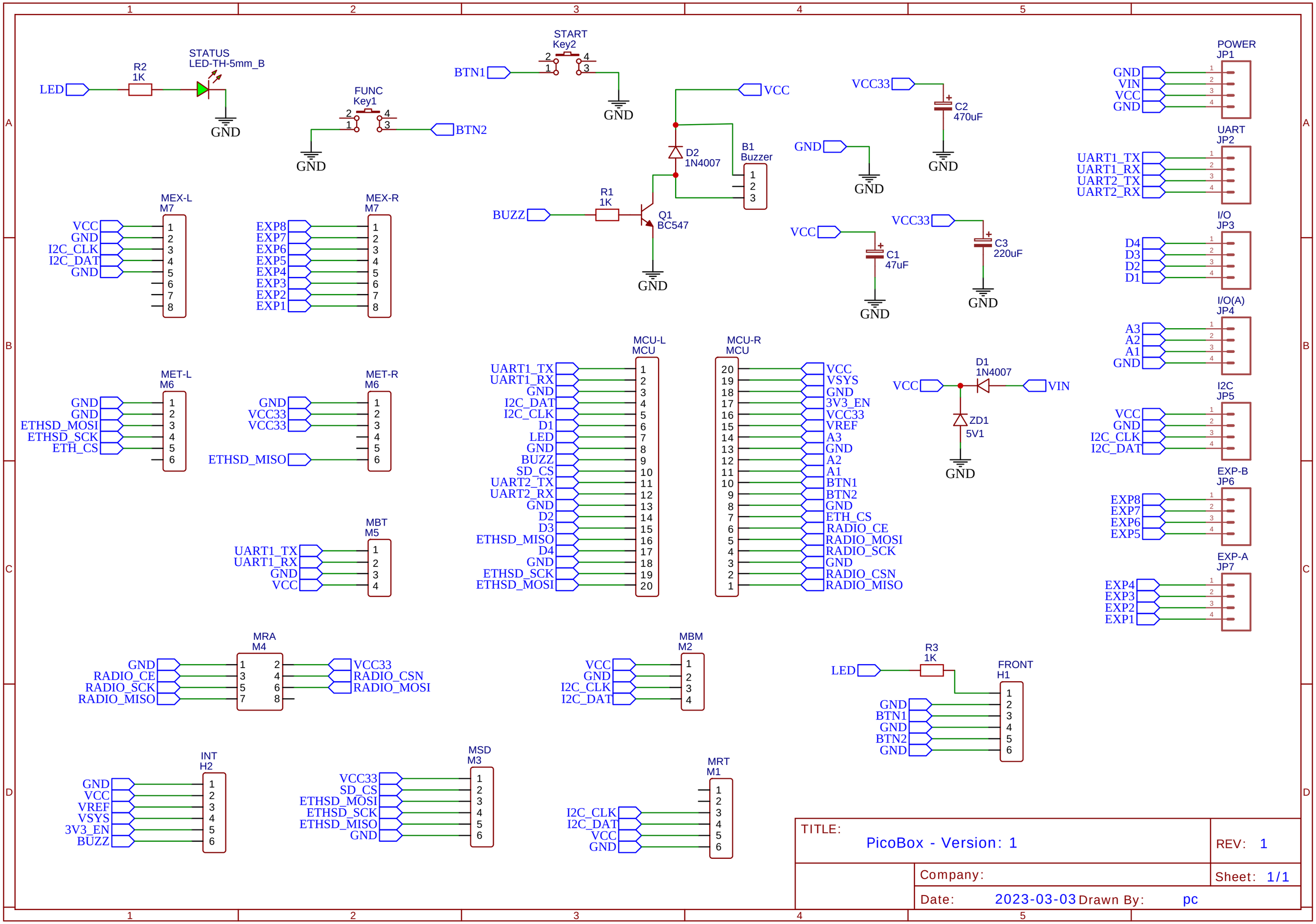
LED
R2
1K
STATUS
LED-TH-5mm_B
GND
BTN1
START
Key2
GND
FUNC
Key1
BTN2
GND
VCC
D2
1N4007
B1
Buzzer
BUZZ
R1
1K
Q1
BC547
GND
VCC33
C2
470uF
GND
GND
VCC
C1
47uF
GND
VCC33
C3
220uF
GND
POWER
JP1
GND
VIN
VCC
GND
UART
JP2
UART1_TX
UART1_RX
UART2_TX
UART2_RX
I/O
JP3
D4
D3
D2
D1
I/O(A)
JP4
A3
A2
A1
GND
I2C
JP5
VCC
GND
I2C_CLK
I2C_DAT
EXP-B
JP6
EXP8
EXP7
EXP6
EXP5
EXP-A
JP7
EXP4
EXP3
EXP2
EXP1
MEX-L
M7
VCC
GND
I2C_CLK
I2C_DAT
GND
MEX-R
M7
EXP8
EXP7
EXP6
EXP5
EXP4
EXP3
EXP2
EXP1
MET-L
M6
GND
GND
ETHSD_MOSI
ETHSD_SCK
ETH_CS
MET-R
M6
GND
VCC33
VCC33
ETHSD_MISO
MCU-L
MCU
UART1_TX
UART1_RX
GND
I2C_DAT
I2C_CLK
D1
LED
GND
BUZZ
SD_CS
UART2_TX
UART2_RX
GND
D2
D3
ETHSD_MISO
D4
GND
ETHSD_SCK
ETHSD_MOSI
MCU-R
MCU
VCC
VSYS
GND
3V3_EN
VCC33
VREF
A3
GND
A2
A1
BTN1
BTN2
GND
ETH_CS
RADIO_CE
RADIO_MOSI
RADIO_SCK
GND
RADIO_CSN
RADIO_MISO
VCC
D1
1N4007
VIN
ZD1
5V1
GND
MBT
M5
UART1_TX
UART1_RX
GND
VCC
MRA
M4
GND
RADIO_CE
RADIO_SCK
RADIO_MISO
VCC33
RADIO_CSN
RADIO_MOSI
MBM
M2
VCC
GND
I2C_CLK
I2C_DAT
LED
R3
1K
FRONT
H1
GND
BTN1
GND
BTN2
GND
INT
H2
GND
VCC
VREF
VSYS
3V3_EN
BUZZ
MSD
M3
VCC33
SD_CS
ETHSD_MOSI
ETHSD_SCK
ETHSD_MISO
GND
MRT
M1
I2C_CLK
I2C_DAT
VCC
GND
TITLE:
PicoBox - Version: 1
REV: 1
Company:
Sheet: 1/1
Date: 2023-03-03
Drawn By: pc