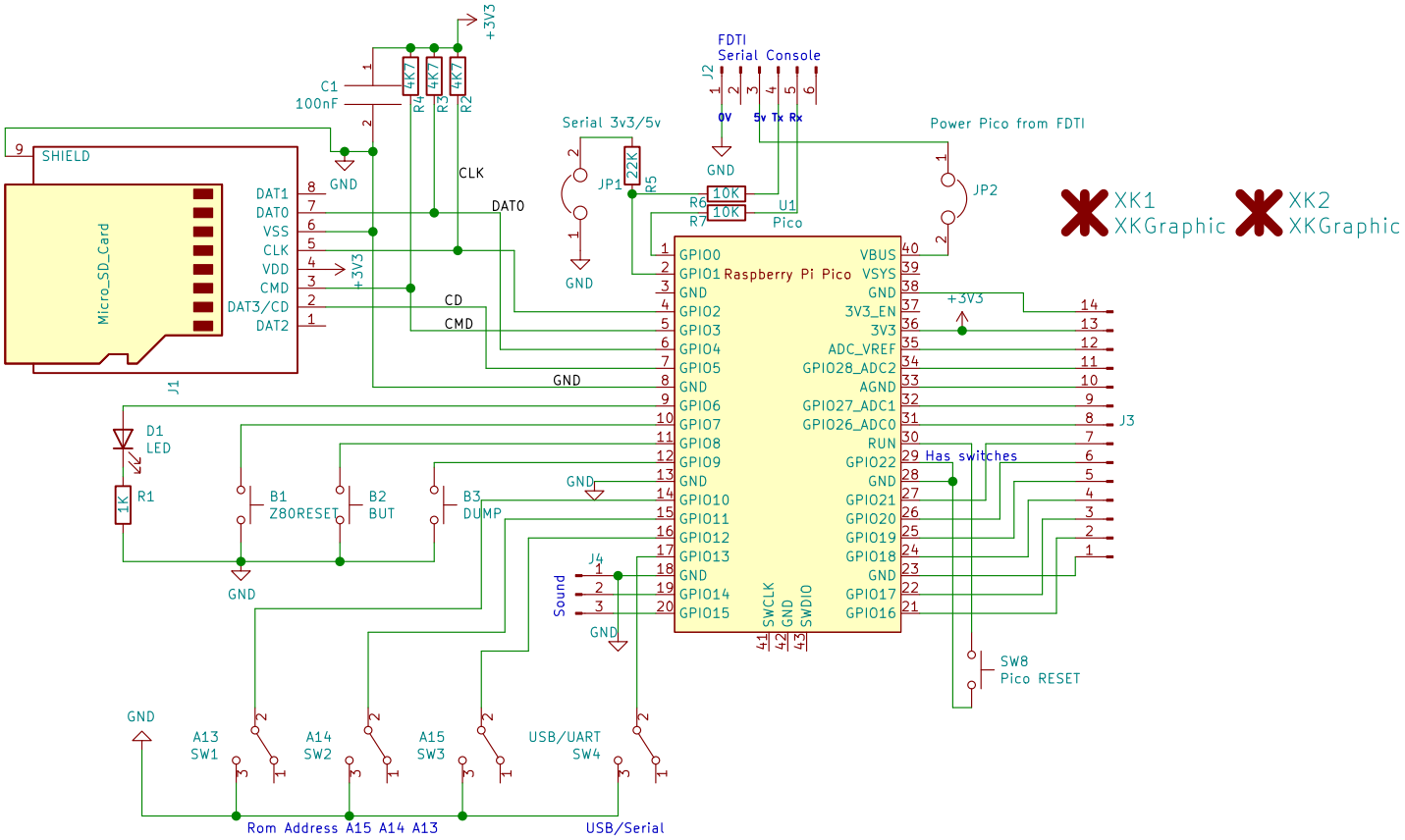

V1 – Switches in a better order for PCB

V2 – SD card power swapped
- Rounded Corners
- Gnd/gpio 14/15 header for sound

RC2040 – Pi Pico V2

Sheet: /
File: rc2040V2.sch

Title:

Size: A4	Date:	**Rev:**
KiCad E.D.A. kicad (5.1.9)-1		Id: 1/1