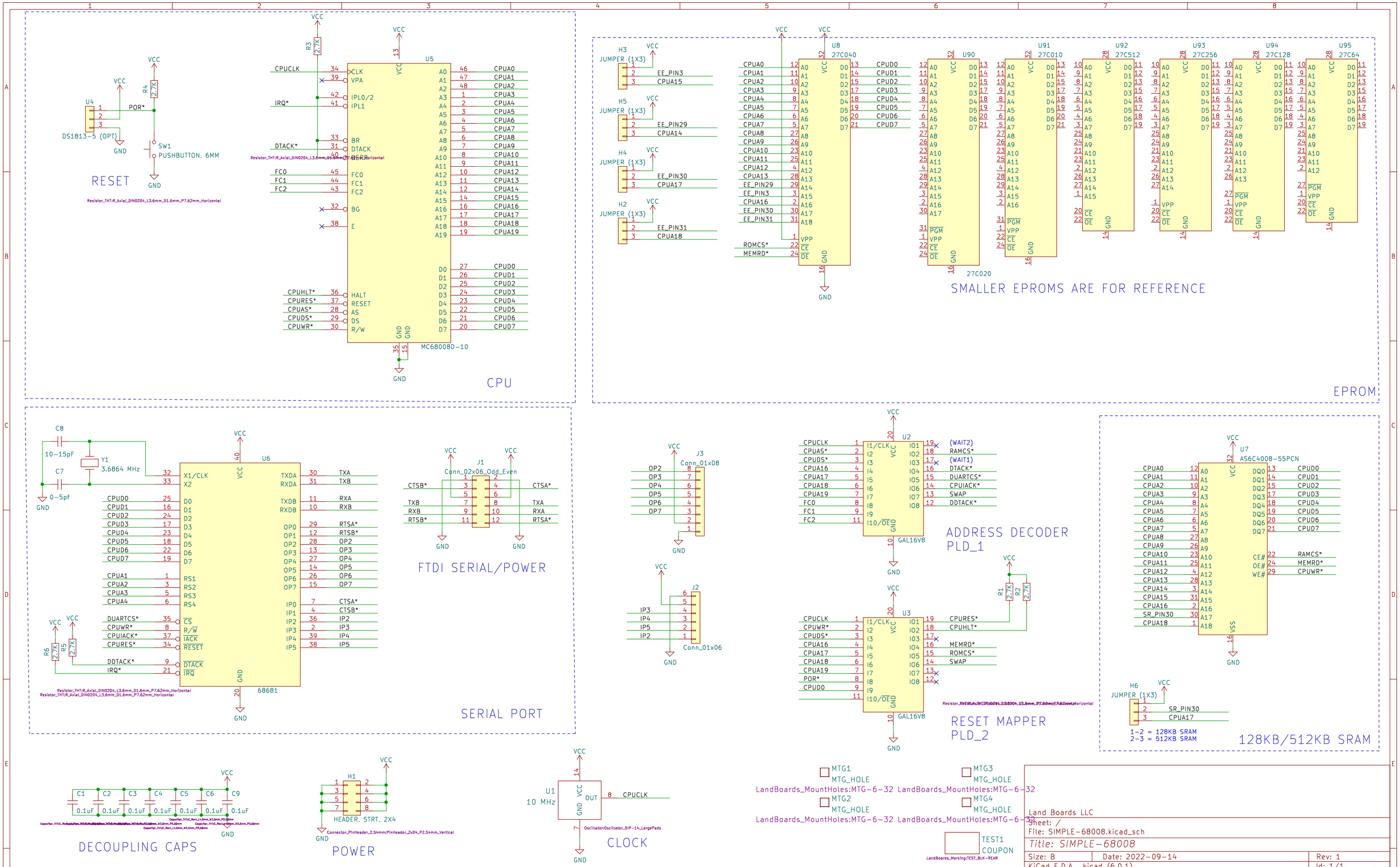
RESET
U4
DS1813-5 (OPT)
POR*
R4 2.7K
SW1
PUSHBUTTON, 6MM
CPU
U5
MC68008D-10
CPUCLK
IRQ*
DTACK*
FC0
FC1
FC2
BG
E
CPUHLT*
CPURES*
CPUAS*
CPUDS*
CPUWR*
CPUA0
CPUA1
CPUA2
CPUA3
CPUA4
CPUA5
CPUA6
CPUA7
CPUA8
CPUA9
CPUA10
CPUA11
CPUA12
CPUA13
CPUA14
CPUA15
CPUA16
CPUA17
CPUA18
CPUA19
CPUD0
CPUD1
CPUD2
CPUD3
CPUD4
CPUD5
CPUD6
CPUD7
EPROM
H3 JUMPER (1X3)
EE_PIN3
CPUA15
H5 JUMPER (1X3)
EE_PIN29
CPUA14
H4 JUMPER (1X3)
EE_PIN30
CPUA17
H2 JUMPER (1X3)
EE_PIN31
CPUA18
U8 27C040
ROMCS*
MEMRD*
U90 27C020
U91 27C010
U92 27C512
U93 27C256
U94 27C128
U95 27C64
SMALLER EPROMS ARE FOR REFERENCE
SERIAL PORT
C8 10-15pF
C7 0-5pf
Y1 3.6864 MHz
U6 68681
TXDA
TXDB
RXDA
RXDB
RTSA*
RTSB*
OP2
OP3
OP4
OP5
OP6
OP7
CTSA*
CTSB*
IP2
IP3
IP4
IP5
DUARTCS*
CPUWR*
CPUIACK*
CPURES*
DDTACK*
IRQ*
R6 2.7K
R5 2.7K
FTDI SERIAL/POWER
J1 Conn_02x06_Odd_Even
TXB
RXB
RTSB*
J3 Conn_01x08
J2 Conn_01x06
ADDRESS DECODER
PLD_1
U2 GAL16V8
(WAIT2)
RAMCS*
(WAIT1)
DTACK*
DUARTCS*
CPUIACK*
SWAP
DDTACK*
RESET MAPPER
PLD_2
U3 GAL16V8
R1 2.7K
R2 2.7K
U7 AS6C4008-55PCN
128KB/512KB SRAM
H6 JUMPER (1X3)
SR_PIN30
CPUA17
1-2 = 128KB SRAM
2-3 = 512KB SRAM
DECOUPLING CAPS
C1 0.1uF
C2 0.1uF
C3 0.1uF
C4 0.1uF
C5 0.1uF
C6 0.1uF
C9 0.1uF
POWER
H1 HEADER, STRT, 2X4
CLOCK
U1 10 MHz
MTG1 MTG_HOLE LandBoards_MountHoles:MTG-6-32
MTG2 MTG_HOLE LandBoards_MountHoles:MTG-6-32
MTG3 MTG_HOLE LandBoards_MountHoles:MTG-6-32
MTG4 MTG_HOLE LandBoards_MountHoles:MTG-6-32
TEST1 COUPON
Land Boards LLC
Sheet: /
File: SIMPLE-68008.kicad_sch
Title: SIMPLE-68008
Size: B
Date: 2022-09-14
Rev: 1
KiCad E.D.A. kicad (6.0.1)
Id: 1/1