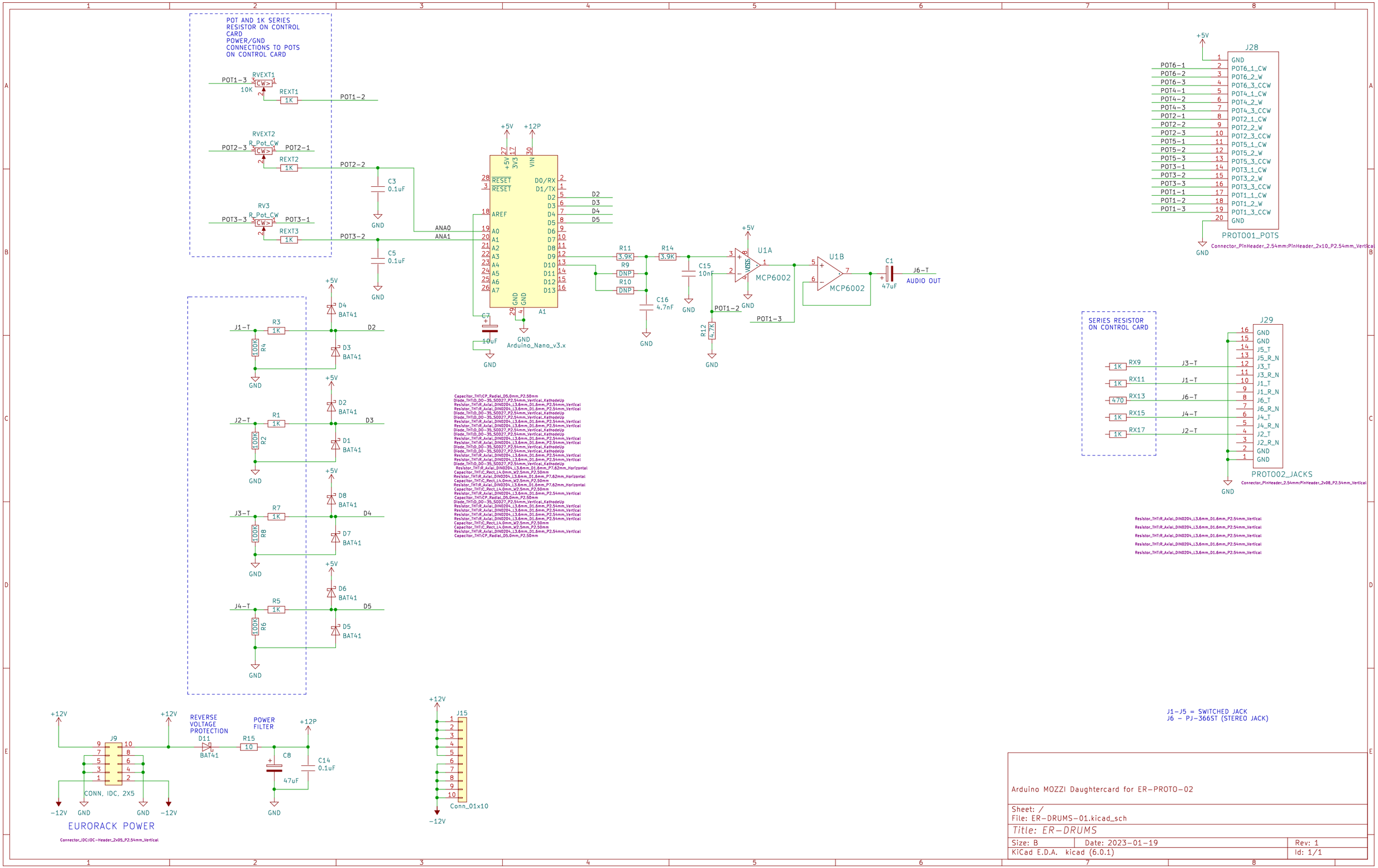
POT AND 1K SERIES RESISTOR ON CONTROL CARD POWER/GND CONNECTIONS TO POTS ON CONTROL CARD
POT1-3
RVEXT1
10K
REXT1
1K
POT1-2
RVEXT2
R_Pot_CW
POT2-3
POT2-1
REXT2
POT2-2
C3
0.1uF
RV3
POT3-3
POT3-1
REXT3
POT3-2
C5
0.1uF
GND
+5V
+12P
3V3
VIN
RESET
AREF
D0/RX
D1/TX
A0
A1
A2
A3
A4
A5
A6
A7
D2
D3
D4
D5
D6
D7
D8
D9
D10
D11
D12
D13
ANA0
ANA1
C7
10uF
Arduino_Nano_v3.x
R11
3.9K
R9
DNP
R10
DNP
R14
3.9K
C16
4.7nF
C15
10nF
R12
4.7K
U1A
MCP6002
U1B
MCP6002
C1
47uF
J6-T
AUDIO OUT
POT1-3
J28
PROTO01_POTS
Connector_PinHeader_2.54mm:PinHeader_2x10_P2.54mm_Vertical
POT6-1
POT6-2
POT6-3
POT4-1
POT4-2
POT4-3
POT2-1
POT2-2
POT2-3
POT5-1
POT5-2
POT5-3
POT3-1
POT3-2
POT3-3
POT1-1
POT1-2
POT1-3
GND
POT6_1_CW
POT6_2_W
POT6_3_CCW
POT4_1_CW
POT4_2_W
POT4_3_CCW
POT2_1_CW
POT2_2_W
POT2_3_CCW
POT5_1_CW
POT5_2_W
POT5_3_CCW
POT3_1_CW
POT3_2_W
POT3_3_CCW
POT1_1_CW
POT1_2_W
POT1_3_CCW
SERIES RESISTOR ON CONTROL CARD
RX9
RX11
RX13
RX15
RX17
J3-T
J1-T
J6-T
J4-T
J2-T
J29
PROTO02_JACKS
Connector_PinHeader_2.54mm:PinHeader_2x08_P2.54mm_Vertical
J5_T
J5_R_N
J3_R_N
J1_R_N
J6_R_N
J4_R_N
J2_R_N
J1-T
R3
R4
100K
D4
BAT41
D3
BAT41
J2-T
R1
R2
D2
BAT41
D1
BAT41
J3-T
R7
R8
D8
BAT41
D7
BAT41
J4-T
R5
R6
D6
BAT41
D5
BAT41
J1-J5 = SWITCHED JACK
J6 - PJ-366ST (STEREO JACK)
J9
CONN, IDC, 2X5
REVERSE VOLTAGE PROTECTION
D11
BAT41
POWER FILTER
R15
10
C8
47uF
C14
0.1uF
-12V
EURORACK POWER
Connector_IDC:IDC-Header_2x05_P2.54mm_Vertical
J15
Conn_01x10
Arduino MOZZI Daughtercard for ER-PROTO-02
Sheet: /
File: ER-DRUMS-01.kicad_sch
Title: ER-DRUMS
Size: B
Date: 2023-01-19
Rev: 1
KiCad E.D.A. kicad (6.0.1)
Id: 1/1