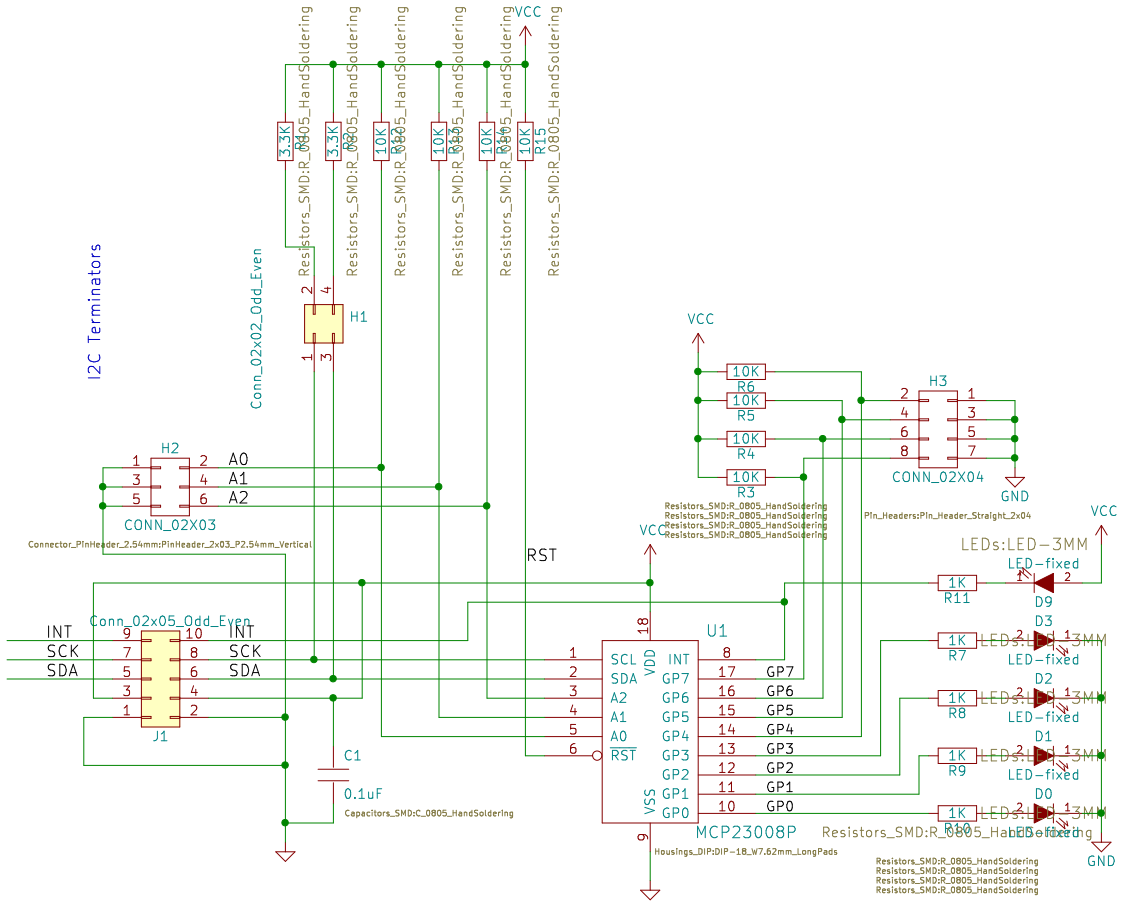

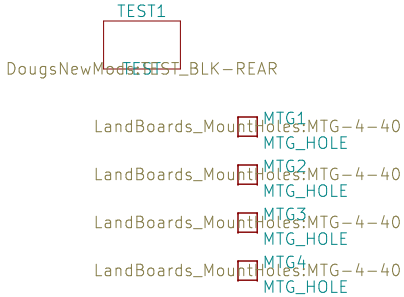

Land Boards LLC

Sheet: /

File: I2CIO-8.kicad_sch

Title: 8-Bit I2C I/O Card

Size: A	Date: 2022-05-16	Rev: 3
KiCad E.D.A. kicad (6.0.1)		Id: 1/1