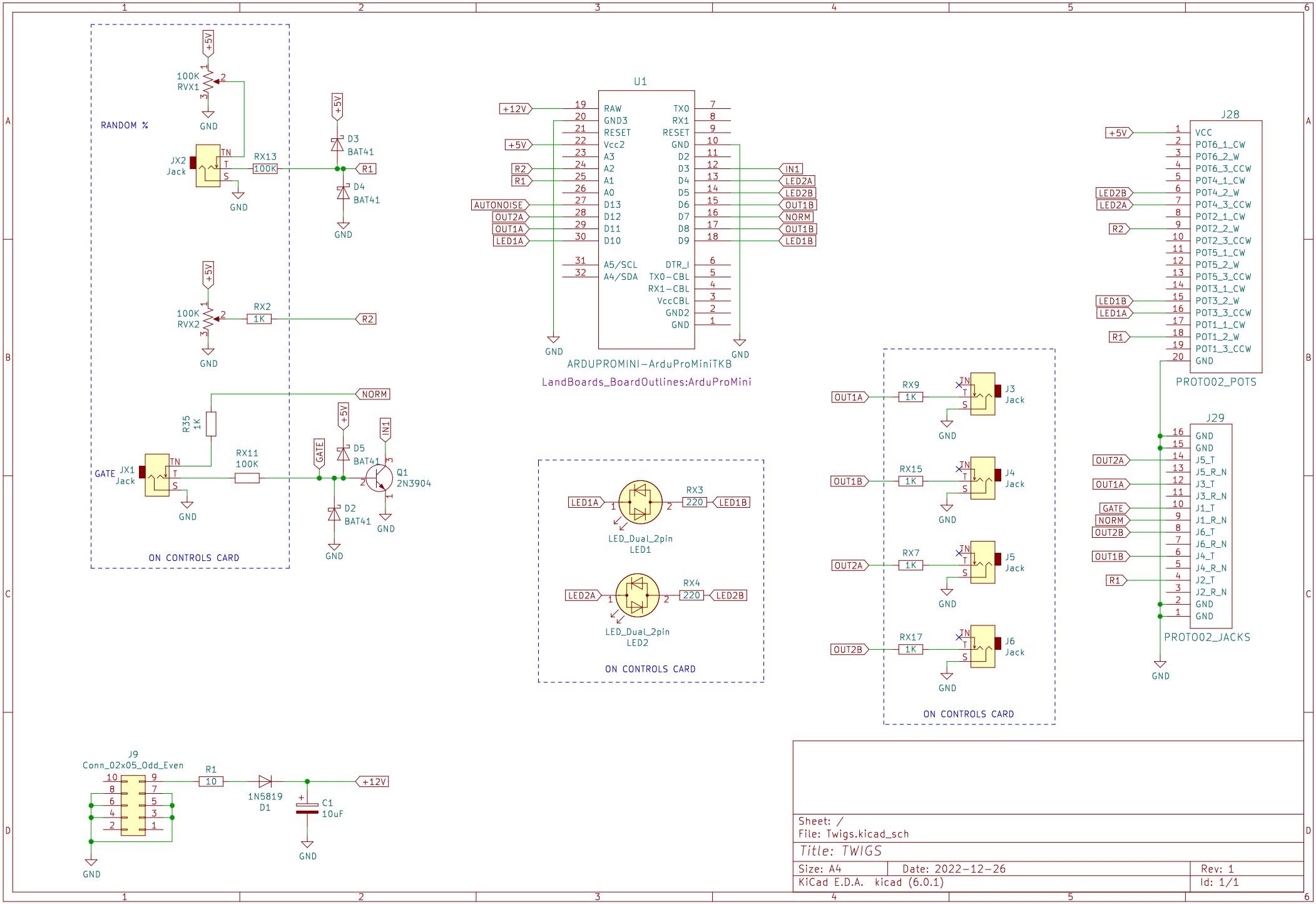
RANDOM %
100K
RVX1
+5V
GND
JX2
Jack
TN
T
S
RX13
100K
D3
BAT41
D4
BAT41
R1
100K
RVX2
RX2
1K
R2
NORM
R35
1K
GATE
JX1
Jack
RX11
100K
D5
BAT41
D2
BAT41
IN1
Q1
2N3904
ON CONTROLS CARD
U1
+12V
+5V
R2
R1
AUTONOISE
OUT2A
OUT1A
LED1A
RAW
GND3
RESET
Vcc2
A3
A2
A1
A0
D13
D12
D11
D10
A5/SCL
A4/SDA
TX0
RX1
RESET
GND
D2
D3
D4
D5
D6
D7
D8
D9
DTR_I
TX0-CBL
RX1-CBL
VccCBL
GND2
GND
IN1
LED2A
LED2B
OUT1B
NORM
OUT1B
LED1B
ARDUPROMINI-ArduProMiniTKB
LandBoards_BoardOutlines:ArduProMini
LED1A
RX3
220
LED1B
LED_Dual_2pin
LED1
LED2A
RX4
220
LED2B
LED_Dual_2pin
LED2
ON CONTROLS CARD
OUT1A
RX9
1K
J3
Jack
OUT1B
RX15
1K
J4
Jack
OUT2A
RX7
1K
J5
Jack
OUT2B
RX17
1K
J6
Jack
ON CONTROLS CARD
J28
VCC
POT6_1_CW
POT6_2_W
POT6_3_CCW
POT4_1_CW
POT4_2_W
POT4_3_CCW
POT2_1_CW
POT2_2_W
POT2_3_CCW
POT5_1_CW
POT5_2_W
POT5_3_CCW
POT3_1_CW
POT3_2_W
POT3_3_CCW
POT1_1_CW
POT1_2_W
POT1_3_CCW
GND
PROTO02_POTS
J29
GND
J5_T
J5_R_N
J3_T
J3_R_N
J1_T
J1_R_N
J6_T
J6_R_N
J4_T
J4_R_N
J2_T
J2_R_N
PROTO02_JACKS
J9
Conn_02x05_Odd_Even
R1
10
1N5819
D1
C1
10uF
+12V
Sheet: /
File: Twigs.kicad_sch
Title: TWIGS
Size: A4
Date: 2022-12-26
Rev: 1
KiCad E.D.A. kicad (6.0.1)
Id: 1/1