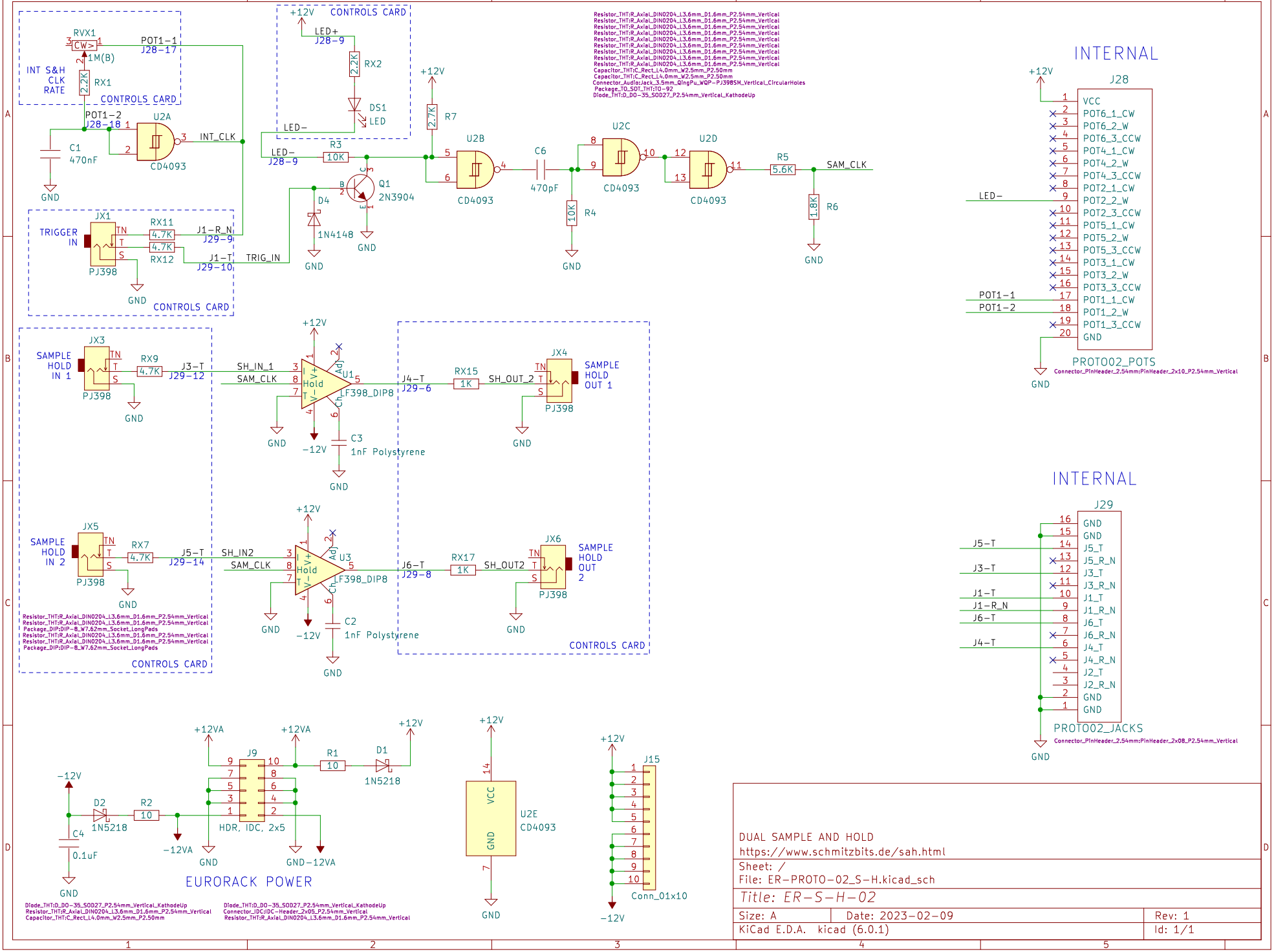

DUAL SAMPLE AND HOLD
https://www.schmitzbits.de/sah.html

Sheet: /
File: ER-PROTO-02_S-H.kicad_sch

Title: ER-S-H-02

Size: A	Date: 2023-02-09	Rev: 1
KiCad E.D.A. kicad (6.0.1)		Id: 1/1