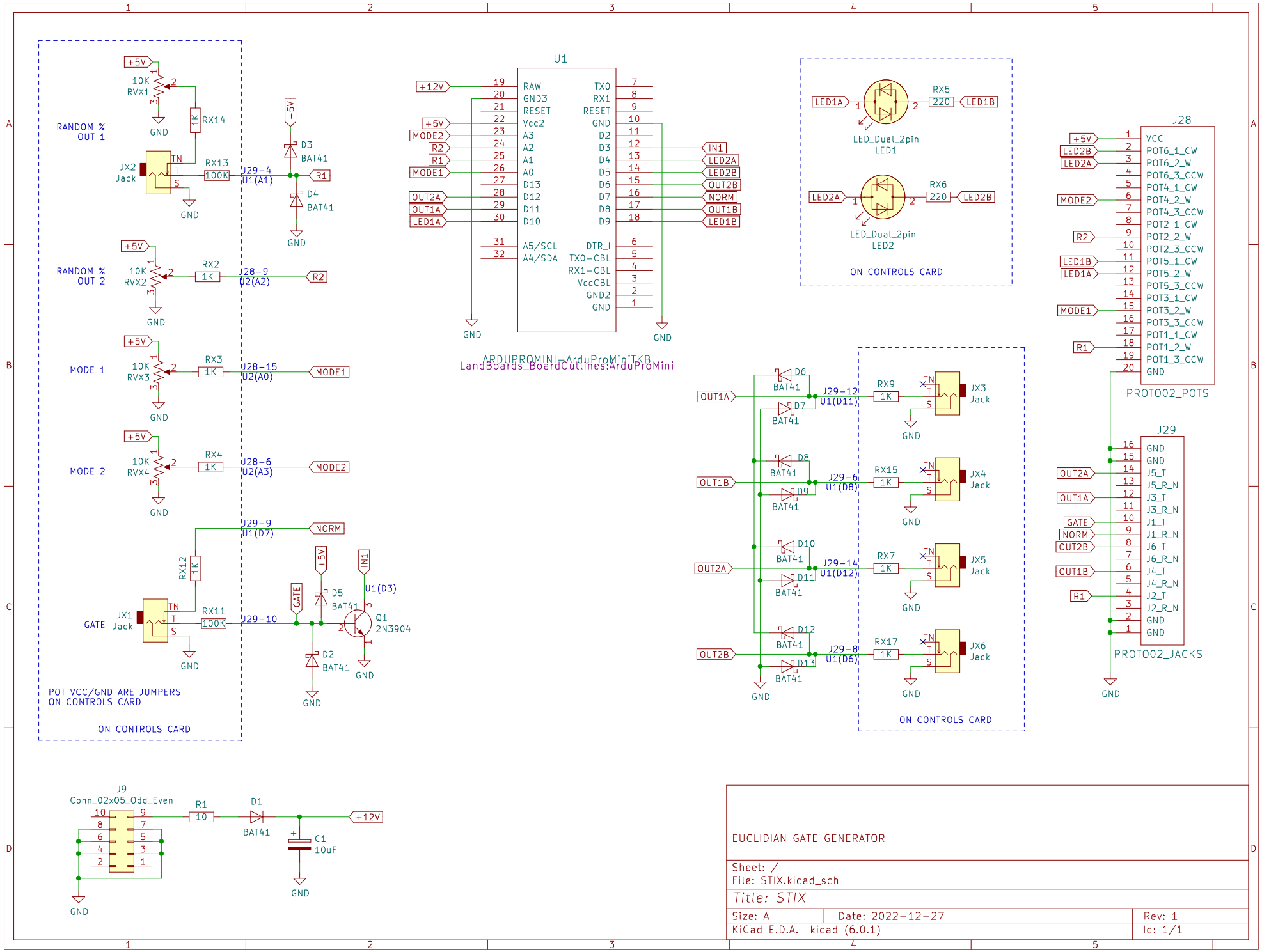
RANDOM % OUT 1
RANDOM % OUT 2
MODE 1
MODE 2
GATE
POT VCC/GND ARE JUMPERS ON CONTROLS CARD
ON CONTROLS CARD
U1
ARDUPROMINI_ArduProMiniTKB
LandBoards_BoardOutlines:ArduProMini
ON CONTROLS CARD
J28
PROTO02_POTS
J29
PROTO02_JACKS
ON CONTROLS CARD
J9
Conn_02x05_Odd_Even
EUCLIDIAN GATE GENERATOR
Sheet: /
File: STIX.kicad_sch
Title: STIX
Size: A
Date: 2022-12-27
Rev: 1
KiCad E.D.A. kicad (6.0.1)
Id: 1/1