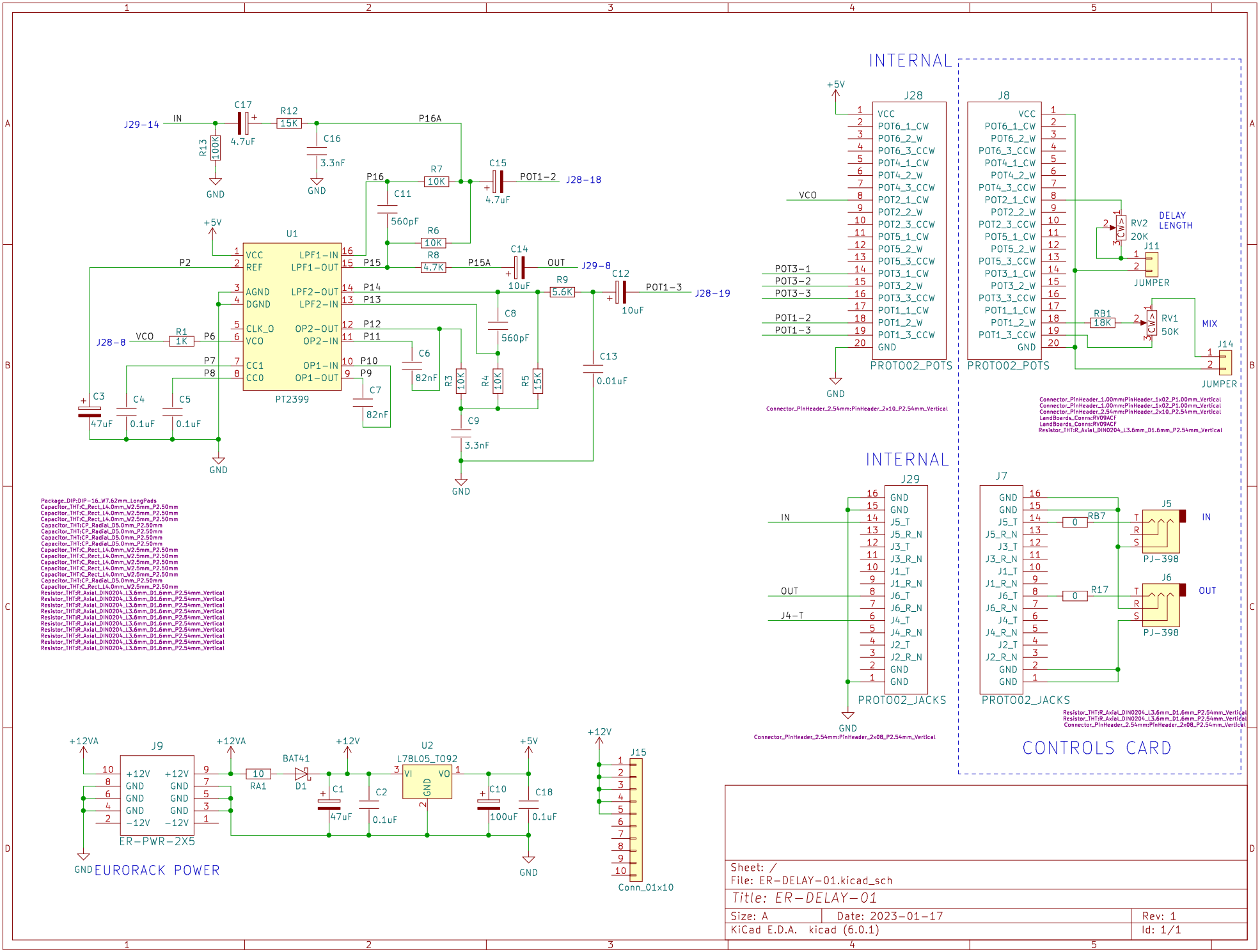
INTERNAL
J28
PROTO02_POTS
J8
PROTO02_POTS
DELAY LENGTH
RV2
20K
J11
JUMPER
RB1
18K
RV1
50K
MIX
J14
JUMPER
INTERNAL
J29
PROTO02_JACKS
J7
PROTO02_JACKS
J5
PJ-398
J6
PJ-398
IN
OUT
CONTROLS CARD
U1
PT2399
J9
ER-PWR-2X5
EURORACK POWER
U2
L78L05_TO92
J15
Conn_01x10
Sheet: /
File: ER-DELAY-01.kicad_sch
Title: ER-DELAY-01
Size: A
Date: 2023-01-17
Rev: 1
KiCad E.D.A. kicad (6.0.1)
Id: 1/1