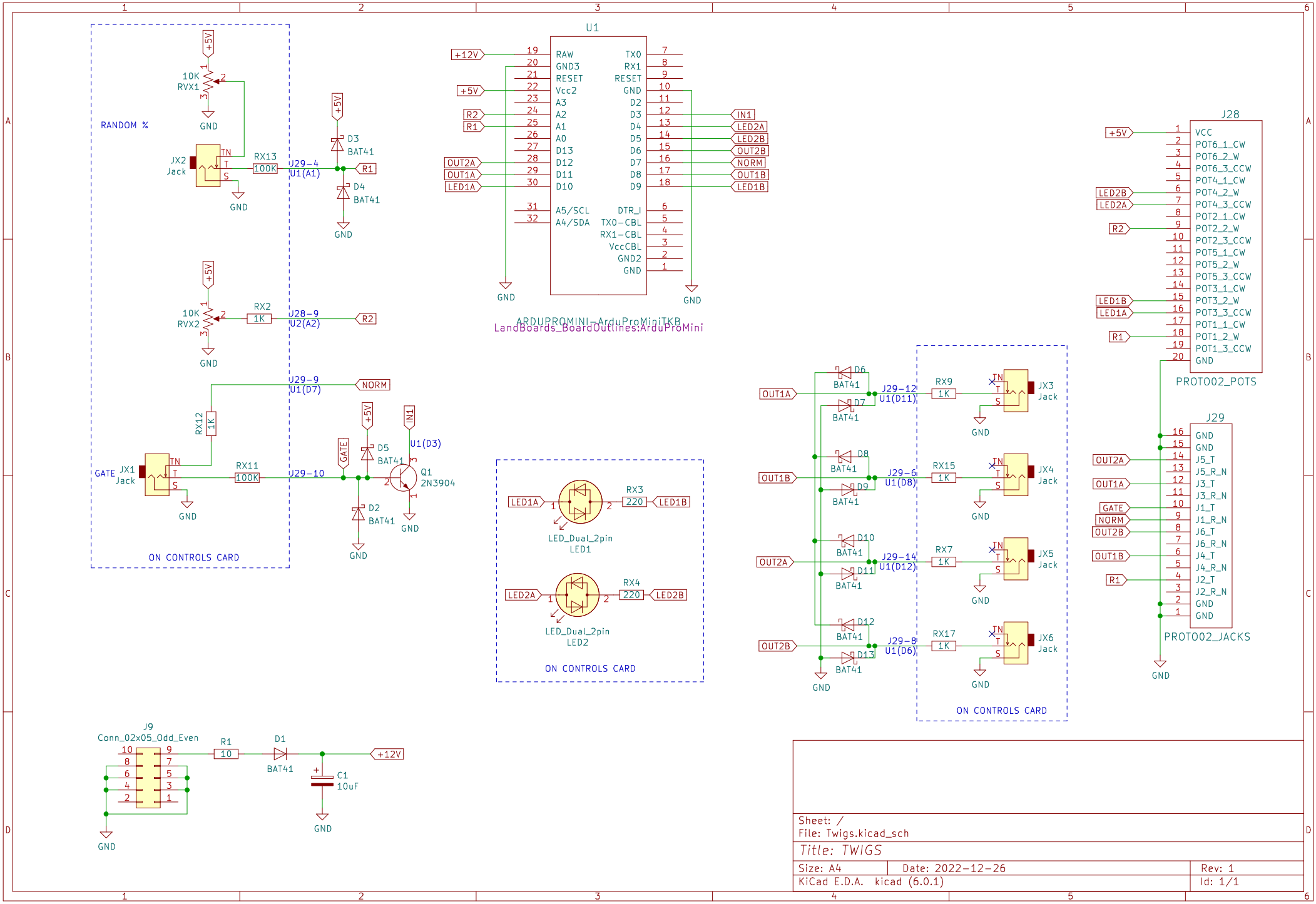
RANDOM %
10K
RVX1
+5V
GND
JX2
Jack
TN
T
S
RX13
100K
U29-4
U1(A1)
D3
BAT41
D4
BAT41
R1
10K
RVX2
RX2
1K
U28-9
U2(A2)
R2
U29-9
U1(D7)
NORM
RX12
1K
GATE
JX1
Jack
RX11
100K
U29-10
D5
BAT41
D2
BAT41
IN1
U1(D3)
Q1
2N3904
ON CONTROLS CARD
U1
RAW
GND3
RESET
Vcc2
A3
A2
A1
A0
D13
D12
D11
D10
A5/SCL
A4/SDA
TX0
RX1
RESET
GND
D2
D3
D4
D5
D6
D7
D8
D9
DTR_I
TX0-CBL
RX1-CBL
VccCBL
GND2
GND
+12V
OUT2A
OUT1A
LED1A
LED2A
LED2B
OUT2B
OUT1B
LED1B
ARDUPROMINI-ArduProMiniTKB
LandBoards_BoardOutlines:ArduProMini
LED1A
RX3
220
LED1B
LED_Dual_2pin
LED1
LED2A
RX4
220
LED2B
LED_Dual_2pin
LED2
ON CONTROLS CARD
OUT1A
OUT1B
OUT2A
OUT2B
D6
D7
D8
D9
D10
D11
D12
D13
BAT41
J29-12
U1(D11)
J29-6
U1(D8)
J29-14
U1(D12)
J29-8
U1(D6)
RX9
RX15
RX7
RX17
1K
JX3
JX4
JX5
JX6
Jack
ON CONTROLS CARD
J28
VCC
POT6_1_CW
POT6_2_W
POT6_3_CCW
POT4_1_CW
POT4_2_W
POT4_3_CCW
POT2_1_CW
POT2_2_W
POT2_3_CCW
POT5_1_CW
POT5_2_W
POT5_3_CCW
POT3_1_CW
POT3_2_W
POT3_3_CCW
POT1_1_CW
POT1_2_W
POT1_3_CCW
GND
PROTO02_POTS
J29
GND
GND
J5_T
J5_R_N
J3_T
J3_R_N
J1_T
J1_R_N
J6_T
J6_R_N
J4_T
J4_R_N
J2_T
J2_R_N
GND
GND
PROTO02_JACKS
J9
Conn_02x05_Odd_Even
R1
10
D1
BAT41
C1
10uF
+12V
Sheet: /
File: Twigs.kicad_sch
Title: TWIGS
Size: A4
Date: 2022-12-26
Rev: 1
KiCad E.D.A. kicad (6.0.1)
Id: 1/1