https://www.midi.org/midi-articles/updated-how-to-make-your-own-3-5mm-mini-stereo-trs-to-midi-5-pin-din-cables

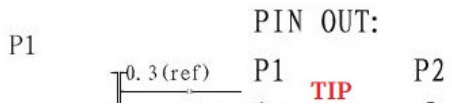

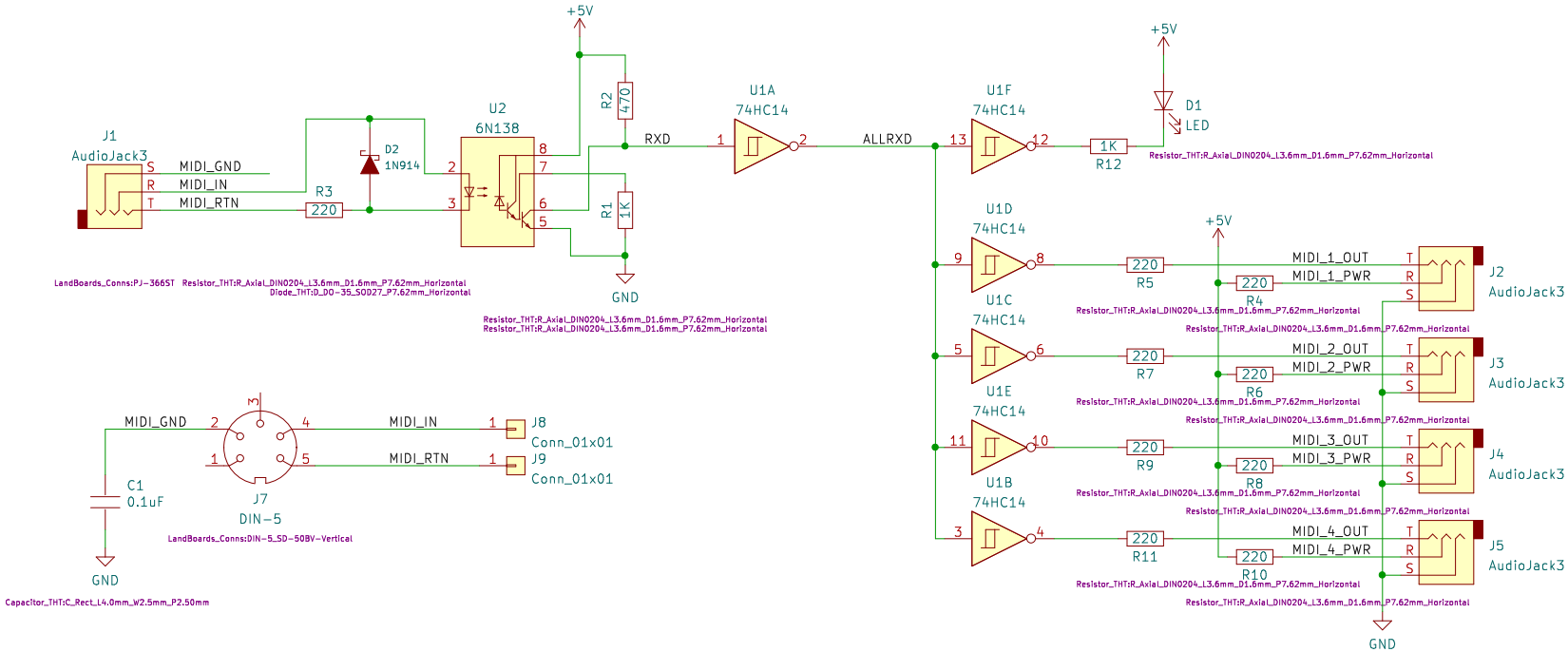

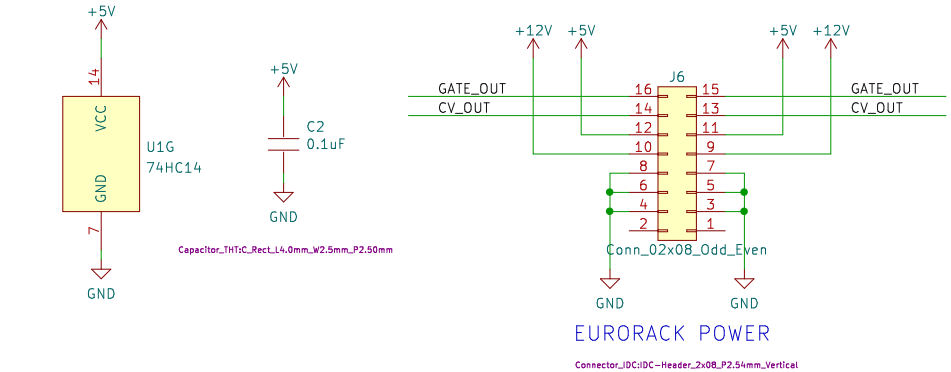

Sheet: /		
File: SYNTH-MIDI-THRU.kicad_sch		
Title: MOD-MIDI-THRU		
Size: A	Date: 2022-10-06	Rev: 1
KiCad E.D.A. kicad (6.0.1)		Id: 1/1