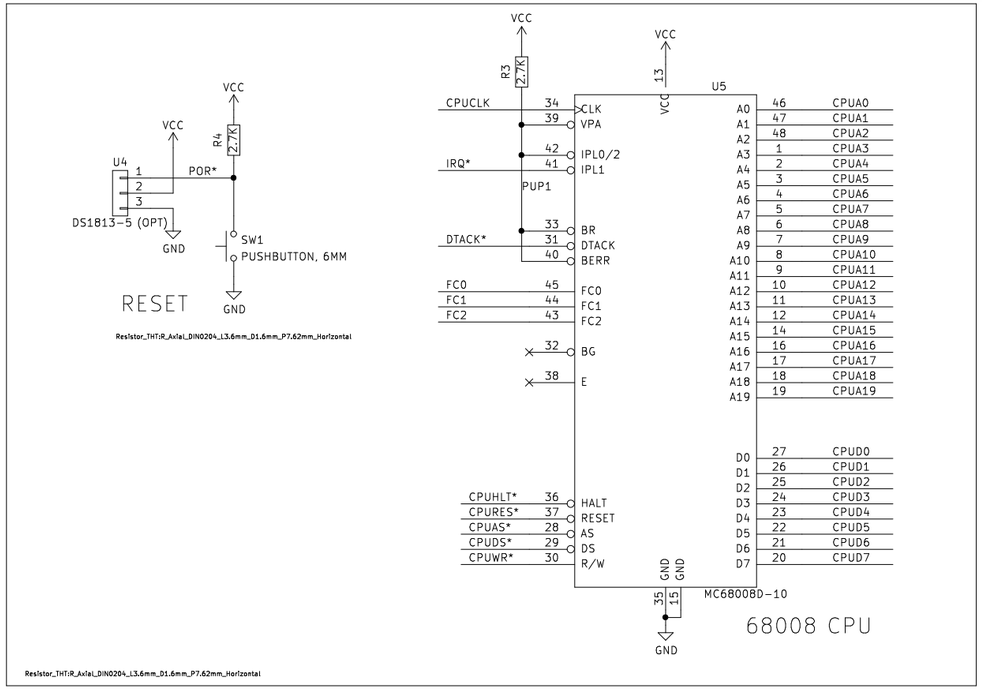

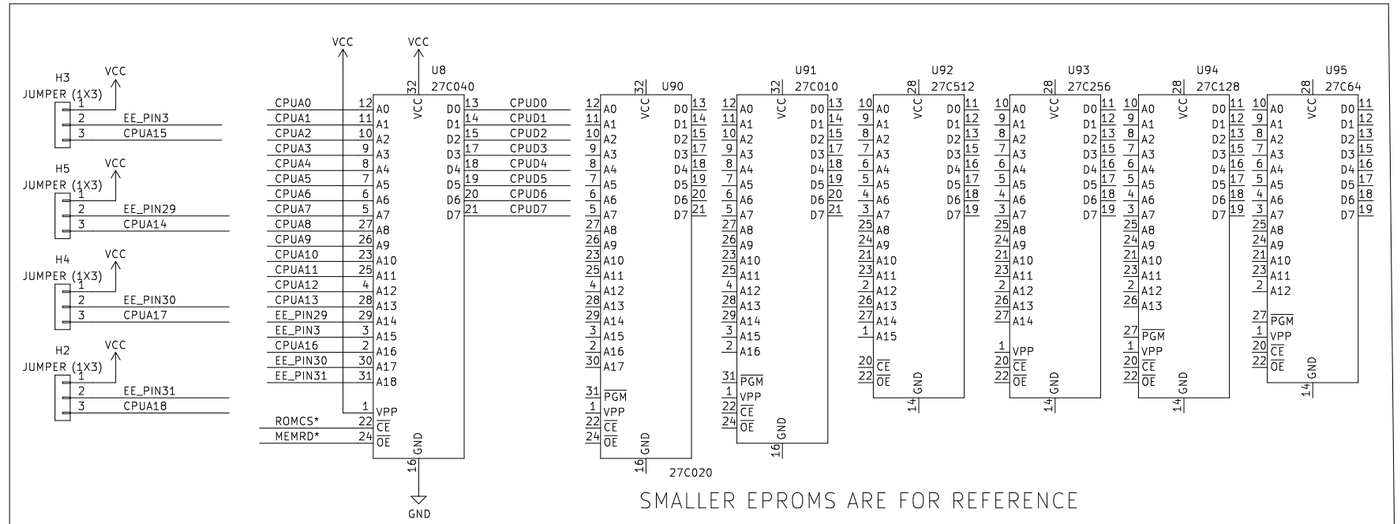

27040	27020	27010	27512	27256	27128	2764	PIN(32)	PIN(28)		PIN(28)	PIN(32)	2764	27128	27256	27512	27010	27020	27040
VPP	VPP	VPP	N/A	N/A	N/A	N/A	1	N/A		N/A	32	N/A	N/A	N/A	N/A	VCC	VCC	VCC
A16	A16	A16	N/A	N/A	N/A	N/A	2	N/A		N/A	31 (H2)	N/A	N/A	N/A	N/A	PGM	PGM	A18
A15	A15	A15	A15	VPP	VPP	VPP	3 (H3)	1		28	30 (H4)	VCC	VCC	VCC	VCC	N/C	A17	A17
A12	A12	A12	A12	A12	A12	A12	4	2		27	29 (H5)	PGM	PGM	A14	A14	A14	A14	A14

EPROM/EEPROM

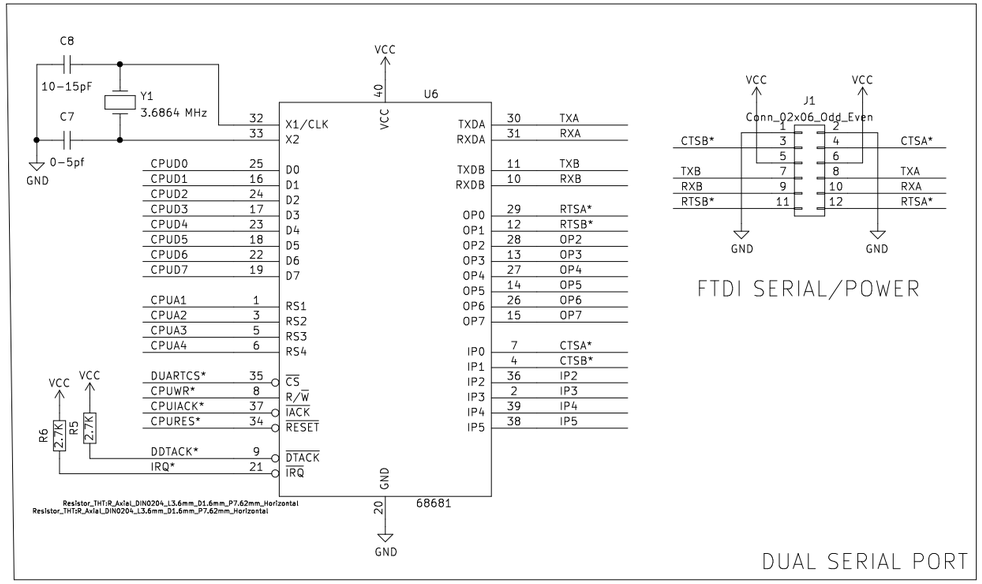

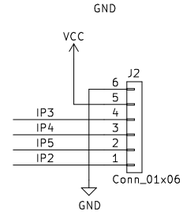

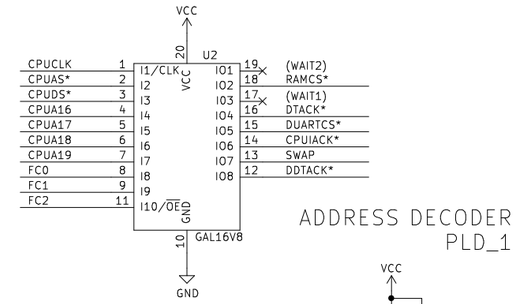

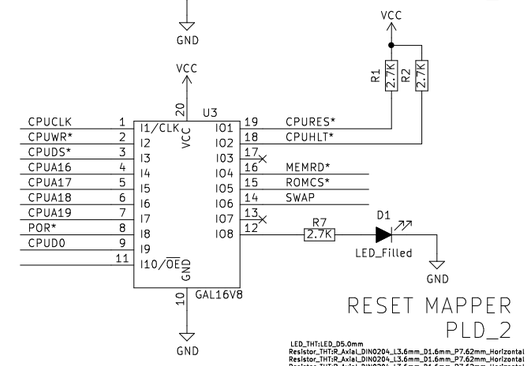

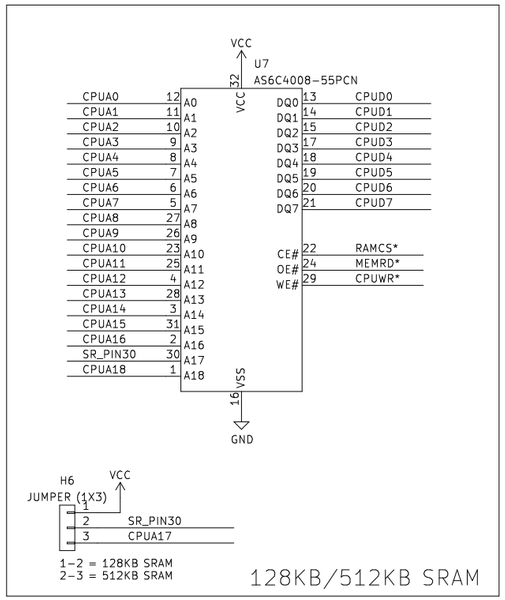

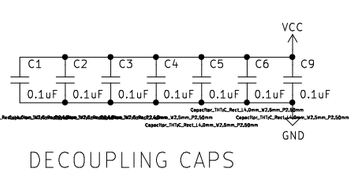

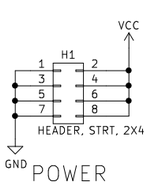

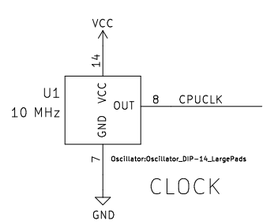

MTG1 MTG_HOLE
MTG2 MTG_HOLE
MTG3 MTG_HOLE
MTG4 MTG_HOLE
LandBoards_MountHoles:MTG-6-32

TEST1 COUPON
LandBoards_Marking:TEST_BLK-REAR

Land Boards LLC
Sheet:
File: SIMPLE-68008.kicad_sch
Title: SIMPLE-68008

Size: B	Date: 2024-06-26	Rev: 2
KiCad E.D.A. kicad (7.0.0)		Id: 1/1