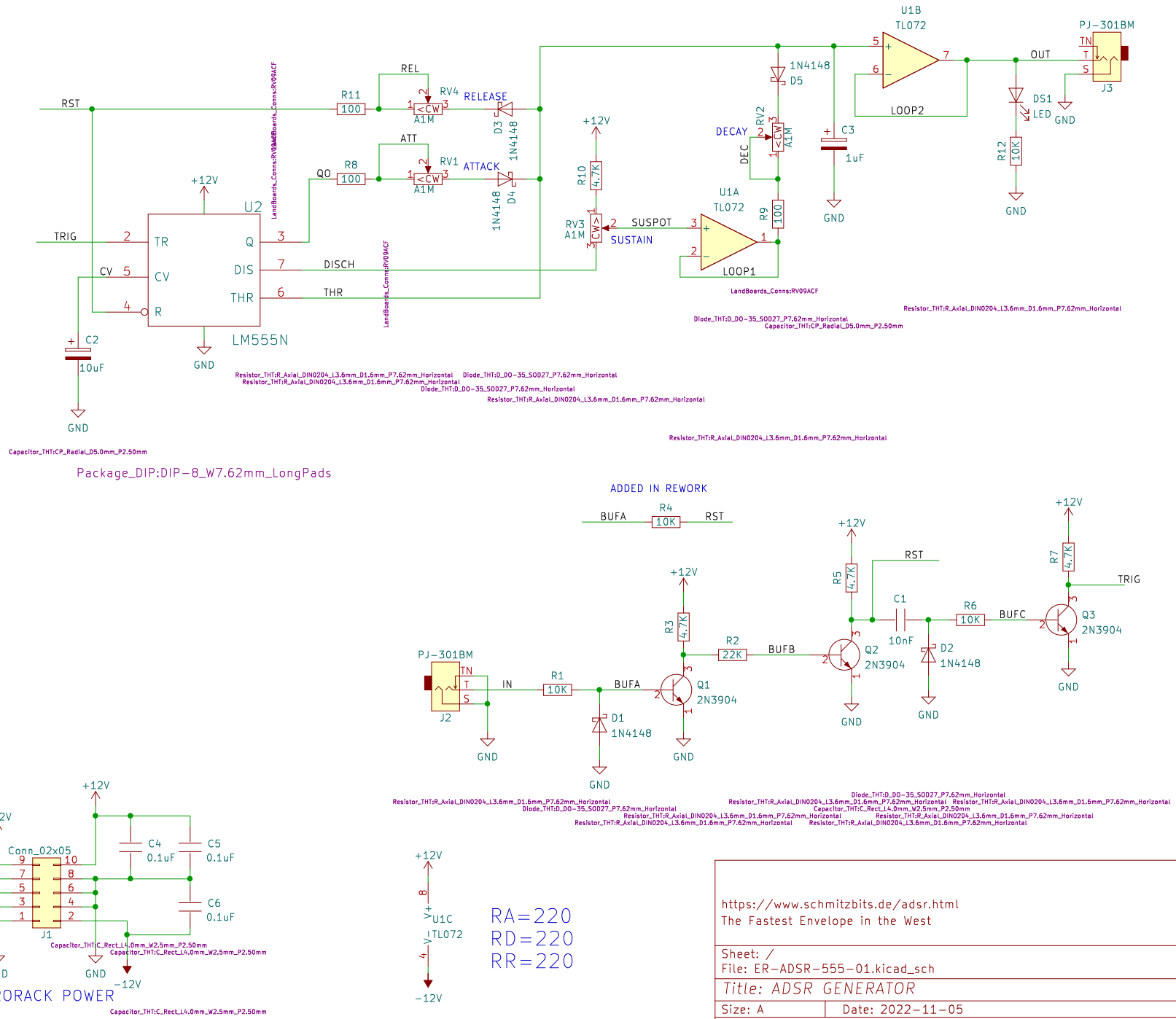

https://www.schmitzbits.de/adsr.html
The Fastest Envelope in the West

Sheet: /
File: ER-ADSR-555-01.kicad_sch

Title: ADSR GENERATOR

Size: A	Date: 2022-11-05	Rev: 2
KiCad E.D.A. kicad (6.0.1)		Id: 1/1