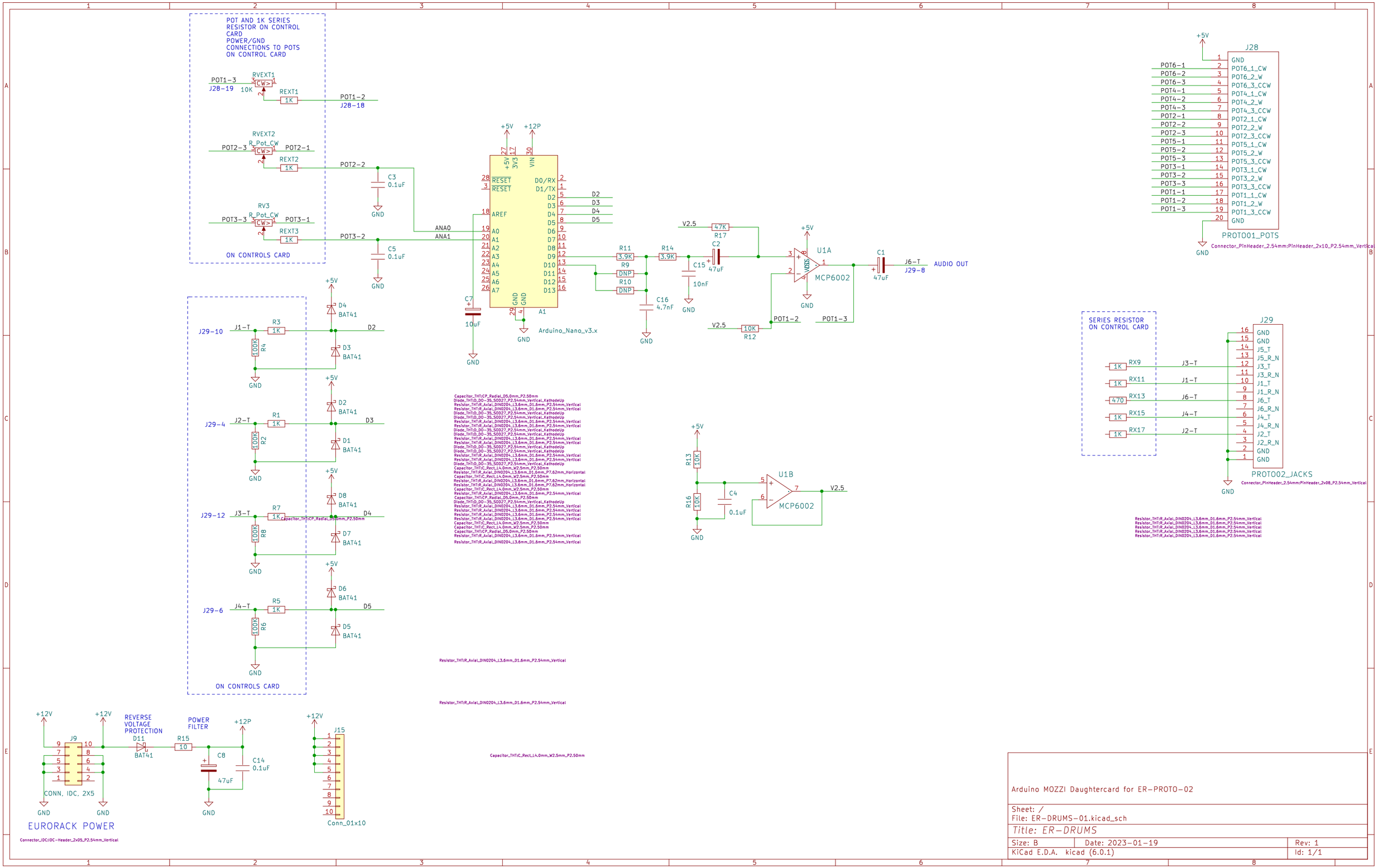
POT AND 1K SERIES RESISTOR ON CONTROL CARD POWER/GND CONNECTIONS TO POTS ON CONTROL CARD
ON CONTROLS CARD
Arduino_Nano_v3.x
MCP6002
PROTO01_POTS
PROTO02_JACKS
SERIES RESISTOR ON CONTROL CARD
AUDIO OUT
EURORACK POWER
REVERSE VOLTAGE PROTECTION
POWER FILTER
CONN, IDC, 2X5
Conn_01x10
Arduino MOZZI Daughtercard for ER-PROTO-02
Sheet: /
File: ER-DRUMS-01.kicad_sch
Title: ER-DRUMS
Size: B
Date: 2023-01-19
Rev: 1
KiCad E.D.A. kicad (6.0.1)
Id: 1/1