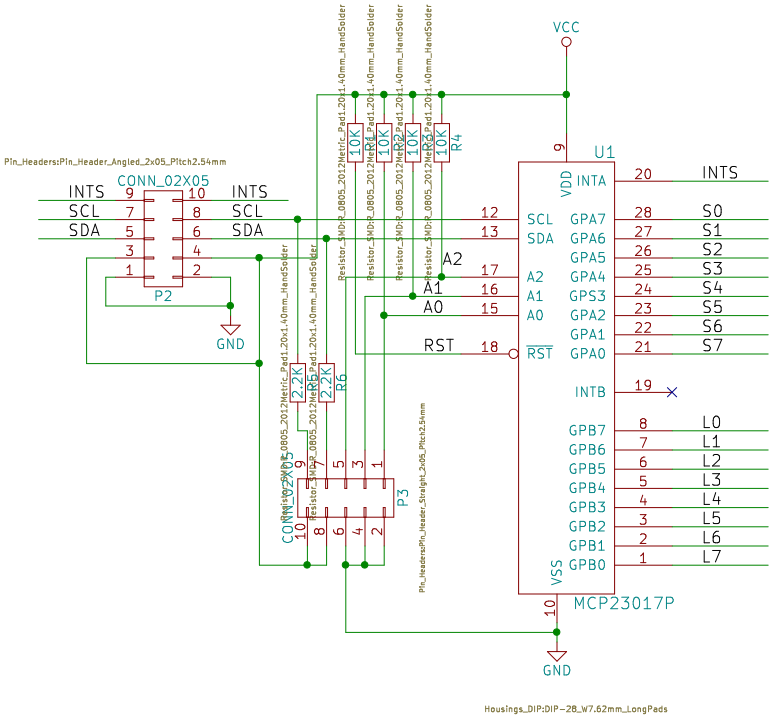

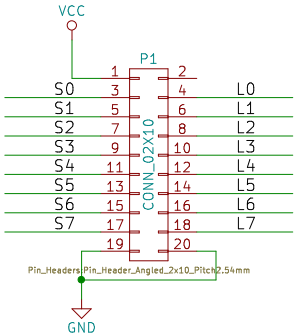

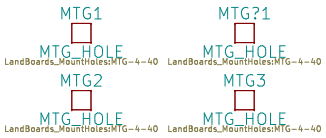

land-boards.com

Sheet: /

File: SWLEDX8-I2C.kicad_sch

Title: SWLEDX8-I2C

Size: A	Date: 2022-05-23	Rev: 2
KiCad E.D.A. kicad (6.0.1)		Id: 1/1