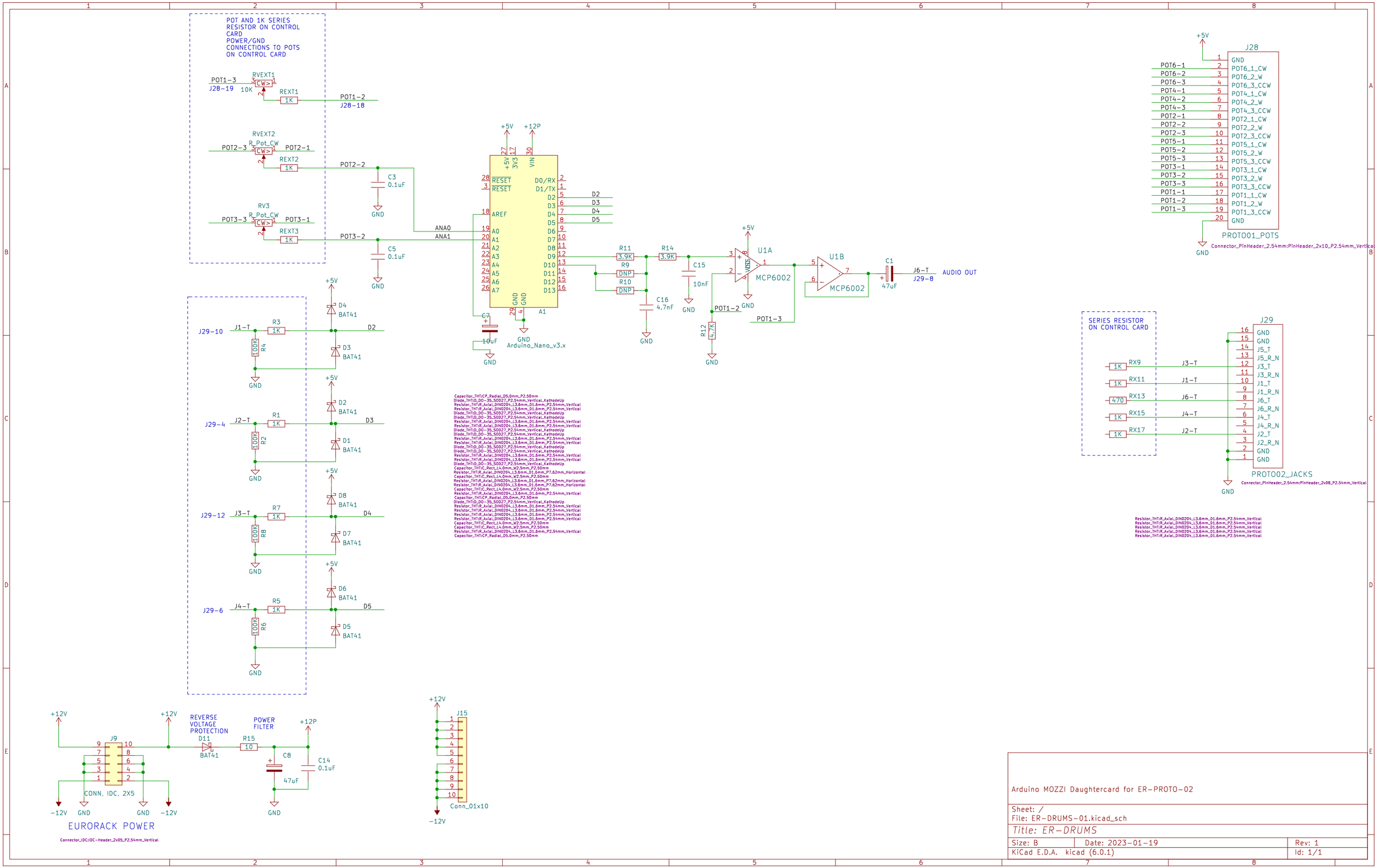

Arduino MOZZI Daughtercard for ER-PROTO-02

Sheet: /
File: ER-DRUMS-01.kicad_sch

Title: ER-DRUMS

Size: B	Date: 2023-01-19	Rev: 1
KiCad E.D.A. kicad (6.0.1)		Id: 1/1