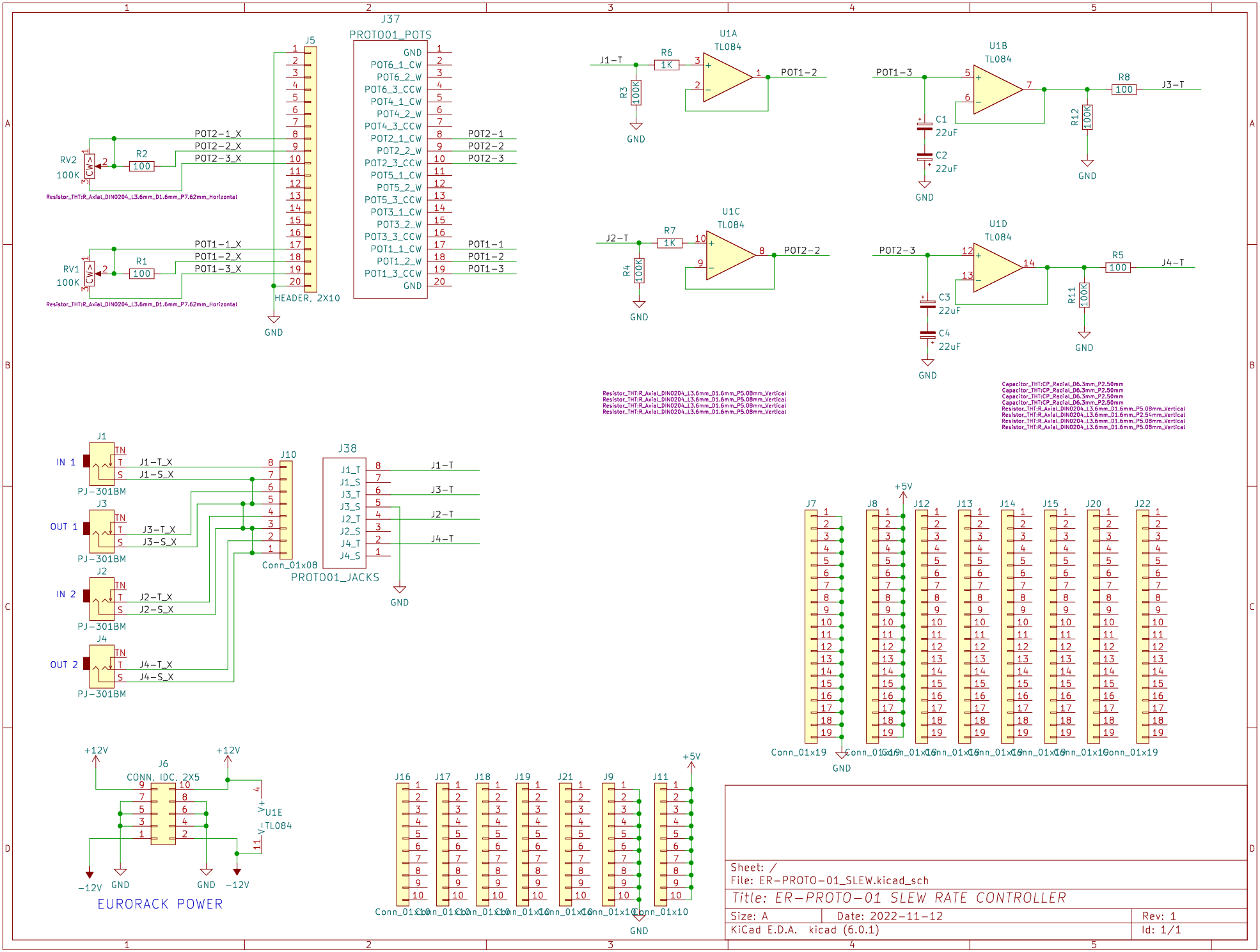

Sheet: /
File: ER-PROTO-01_SLEW.kicad_sch

Title: ER-PROTO-01 SLEW RATE CONTROLLER

Size: A	Date: 2022-11-12	Rev: 1
KiCad E.D.A. kicad (6.0.1)		Id: 1/1