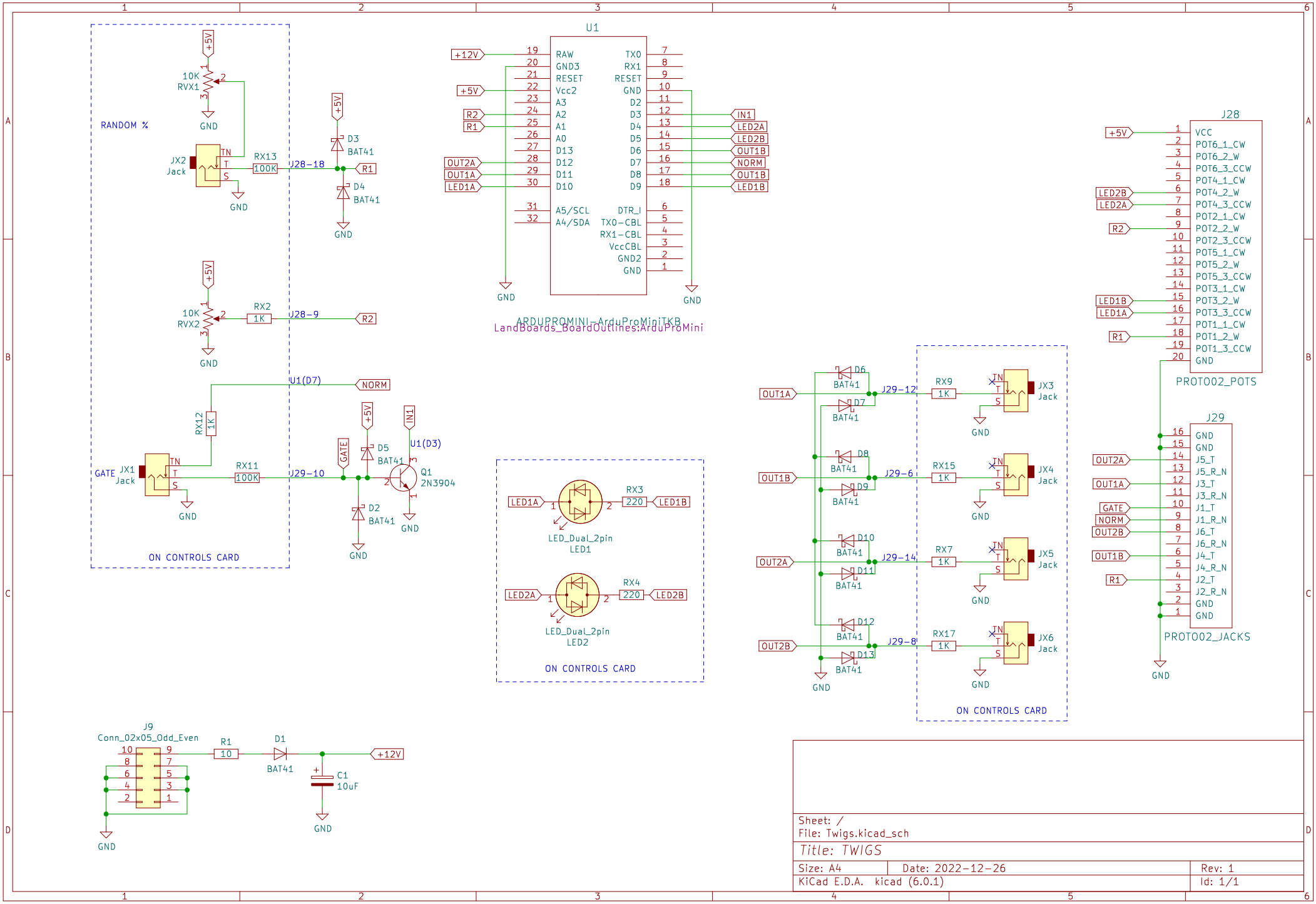

Sheet: /
File: Twigs.kicad_sch

Title: TWIGS

Size: A4 | Date: 2022-12-26 | Rev: 1
KiCad E.D.A. kicad (6.0.1) | Id: 1/1