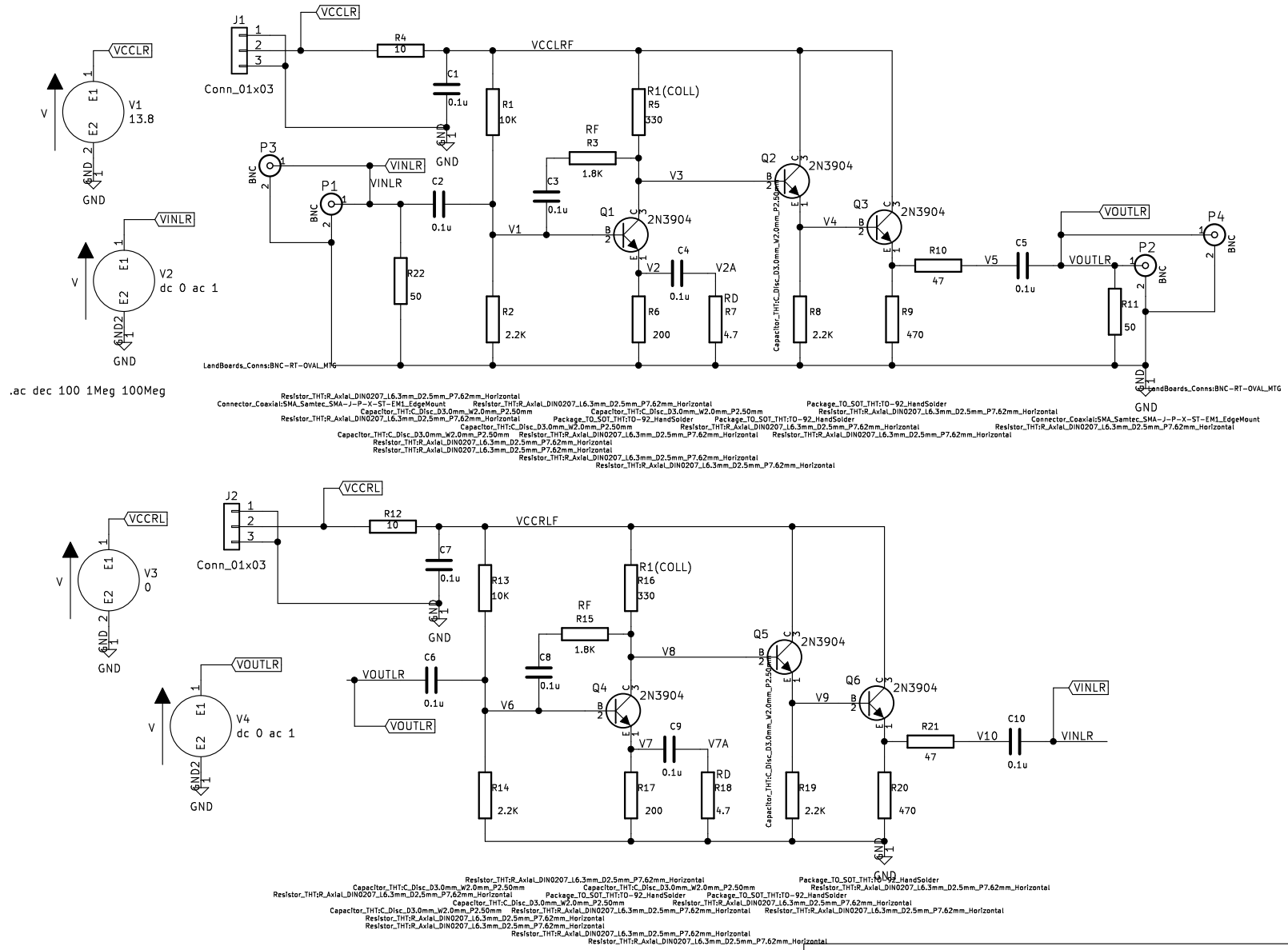


MTG-4-40 MTG1
MTG-4-40 MTG2
MTG-4-40 MTG3
MTG-4-40 MTG4

http://w7zoi.net/bidirectional_matched_amplifier.pdf

**Land Boards LLc**

Sheet: /
File: W7ZOI_TIA.sch

**Title: W7ZIO TERMINATION INSENSITIVE AMPLIFIER (TIA)**

| Size: A | Date: 2021-10-29 | **Rev: 1** |
|---|---|---|
| KiCad E.D.A. kicad (5.1.10)-1 | | Id: 1/1 |