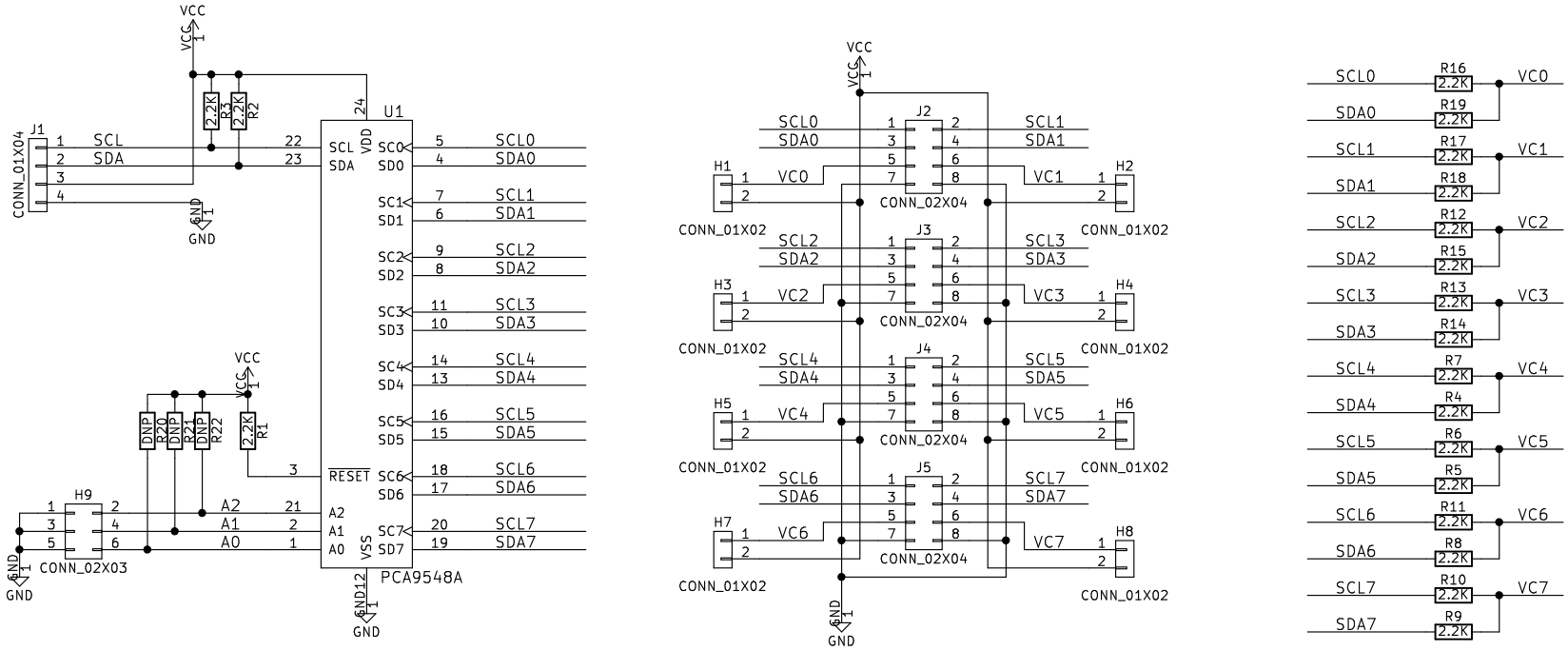

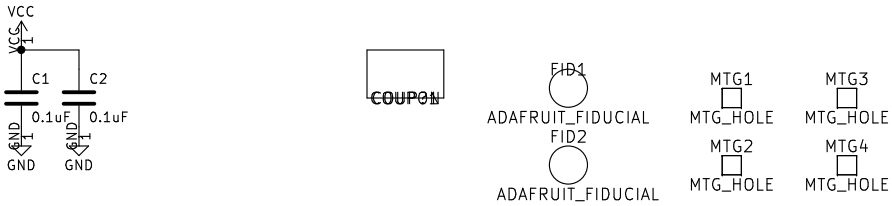

land-boards.com

Sheet: /
File: I2C-RPT-08.sch

Title: 8 CHANNEL I2C MULTIPLEXER

Size: A	Date: Monday, January 16, 2017	**Rev: X1**
KiCad E.D.A. kicad (5.1.10)-1		Id: 1/1