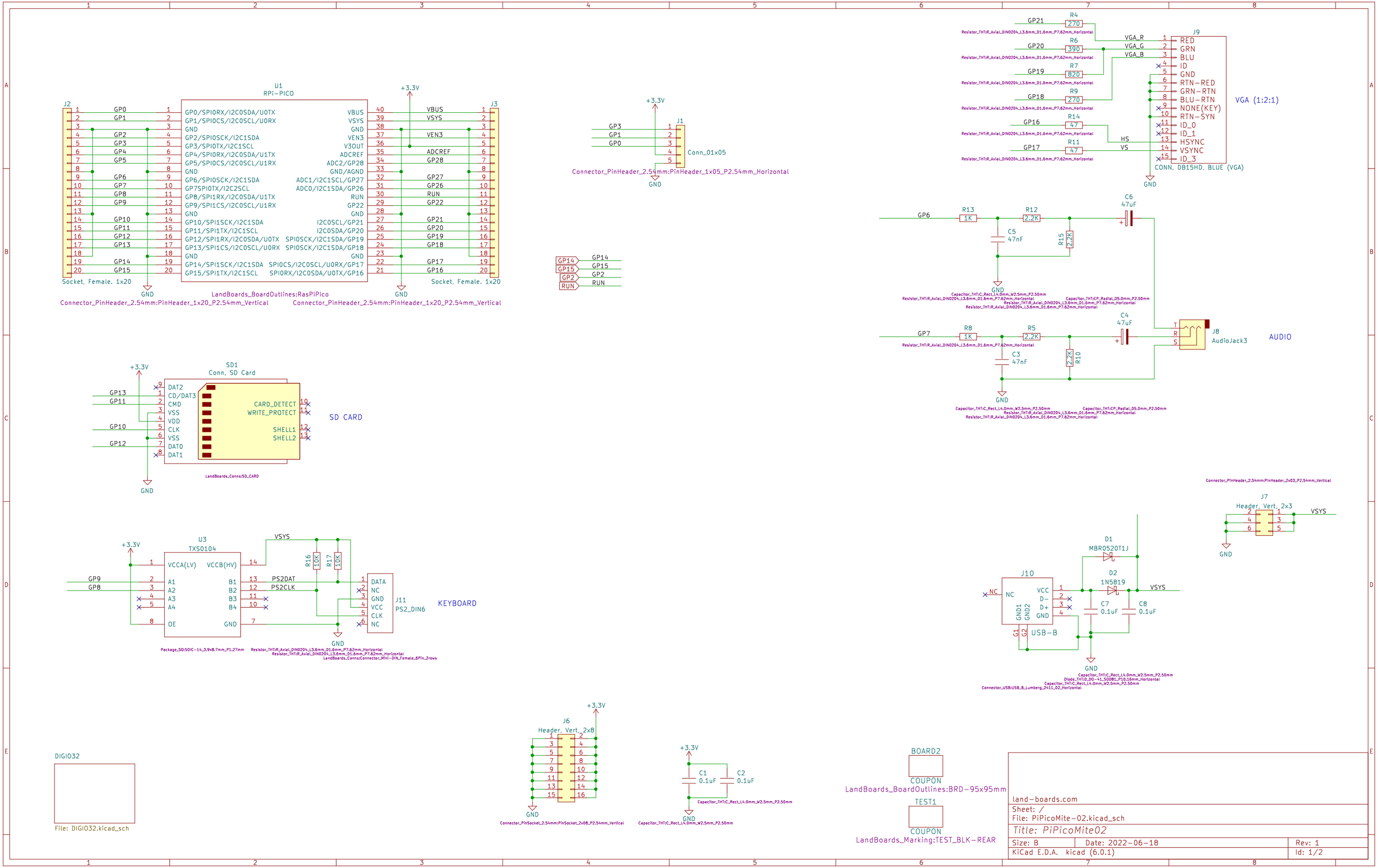
U1
RPi-PICO
J2
J3
Socket, Female, 1x20
Connector_PinHeader_2.54mm:PinHeader_1x20_P2.54mm_Vertical
LandBoards_BoardOutlines:RasPiPico
+3.3V
GND
J1
Conn_01x05
Connector_PinHeader_2.54mm:PinHeader_1x05_P2.54mm_Horizontal
J9
CONN, DB15HD, BLUE (VGA)
VGA (1:2:1)
RED
GRN
BLU
ID
GND
RTN-RED
GRN-RTN
BLU-RTN
NONE(KEY)
RTN-SYN
ID_0
ID_1
HSYNC
VSYNC
ID_3
VGA_R
VGA_G
VGA_B
HS
VS
R4 270
R6 390
R7 820
R9 270
R14 47
R11 47
Resistor_THT:R_Axial_DIN0204_L3.6mm_D1.6mm_P7.62mm_Horizontal
C6 47uF
C5 47nF
R13 1K
R12 2.2K
R15 2.2K
C4 47uF
C3 47nF
R8 1K
R5 2.2K
R10 2.2K
J8
AudioJack3
AUDIO
Capacitor_THT:C_Rect_L4.0mm_W2.5mm_P2.50mm
Capacitor_THT:CP_Radial_D5.0mm_P2.50mm
SD1
Conn, SD Card
SD CARD
LandBoards_Conns:SD_CARD
U3
TXS0104
VCCA(LV)
VCCB(HV)
OE
VSYS
PS2DAT
PS2CLK
R16 10K
R17 10K
J11
PS2_DIN6
DATA
KEYBOARD
Package_SO:SOIC-14_3.9x8.7mm_P1.27mm
Resistor_THT:R_Axial_DIN0204_L3.6mm_D1.6mm_P7.62mm_Horizontal
LandBoards_Conns:Connector_Mini-DIN_Female_6Pin_2rows
Connector_PinHeader_2.54mm:PinHeader_2x03_P2.54mm_Vertical
J7
Header, Vert, 2x3
D1
MBR0520T1J
D2
1N5819
J10
USB-B
C7 0.1uF
C8 0.1uF
Capacitor_THT:C_Rect_L4.0mm_W2.5mm_P2.50mm
Diode_THT:D0-41_SOD81_P10.16mm_Horizontal
Connector_USB:USB_B_Lumberg_2411_02_Horizontal
J6
Header, Vert, 2x8
Connector_PinSocket_2.54mm:PinSocket_2x08_P2.54mm_Vertical
C1 0.1uF
C2 0.1uF
DIGIO32
File: DIGIO32.kicad_sch
BOARD2
COUPON
LandBoards_BoardOutlines:BRD-95x95mm
TEST1
LandBoards_Marking:TEST_BLK-REAR
land-boards.com
Sheet: /
File: PiPicoMite-02.kicad_sch
Title: PiPicoMite02
Size: B
Date: 2022-06-18
Rev: 1
KiCad E.D.A. kicad (6.0.1)
Id: 1/2

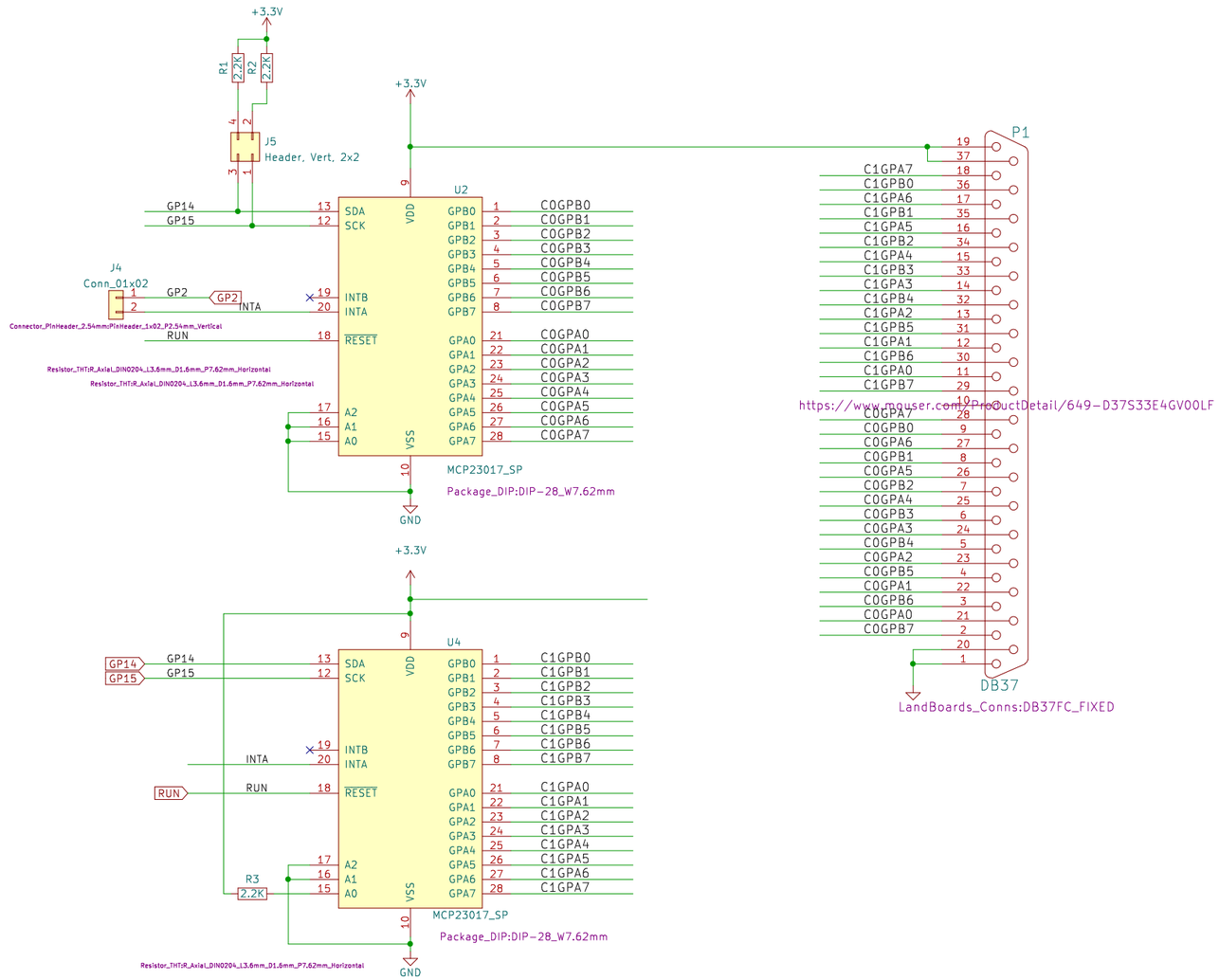

land-boards.com

Sheet: /DIGIO32/

File: DIGIO32.kicad_sch

Title: DIGIO32

Size: B	Date: 2022-05-27	Rev: 1
KiCad E.D.A. kicad (6.0.1)		Id: 2/2