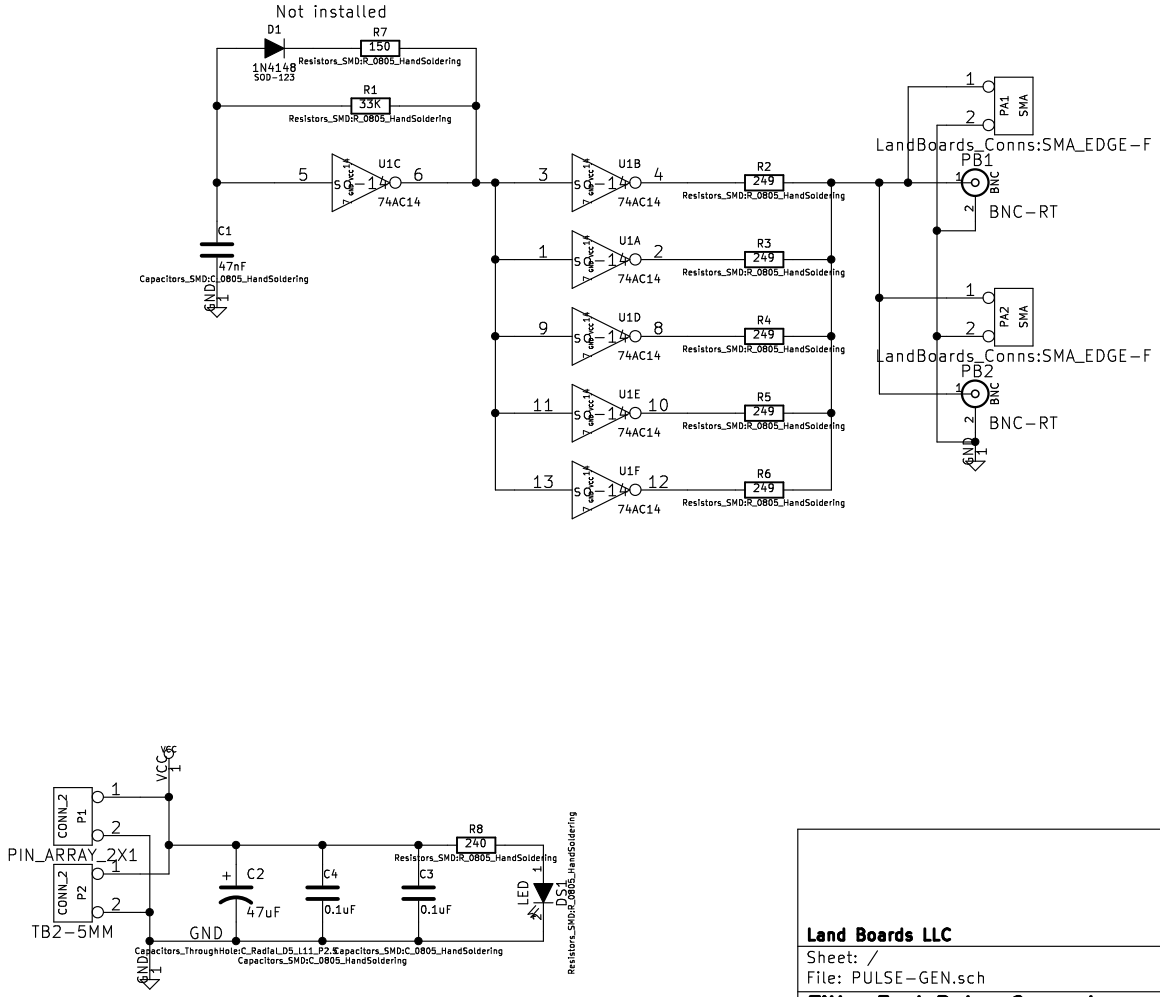

MTG-4-40 MTG1
MTG-4-40 MTG2
MTG-4-40 MTG3
MTG-4-40 MTG4

Land Boards LLC

Sheet: /
File: PULSE-GEN.sch

Title: Fast Pulse Generator

Size: A	Date: 2 nov 2014	**Rev: X6**
KiCad E.D.A. kicad (5.1.5)-3		Id: 1/1