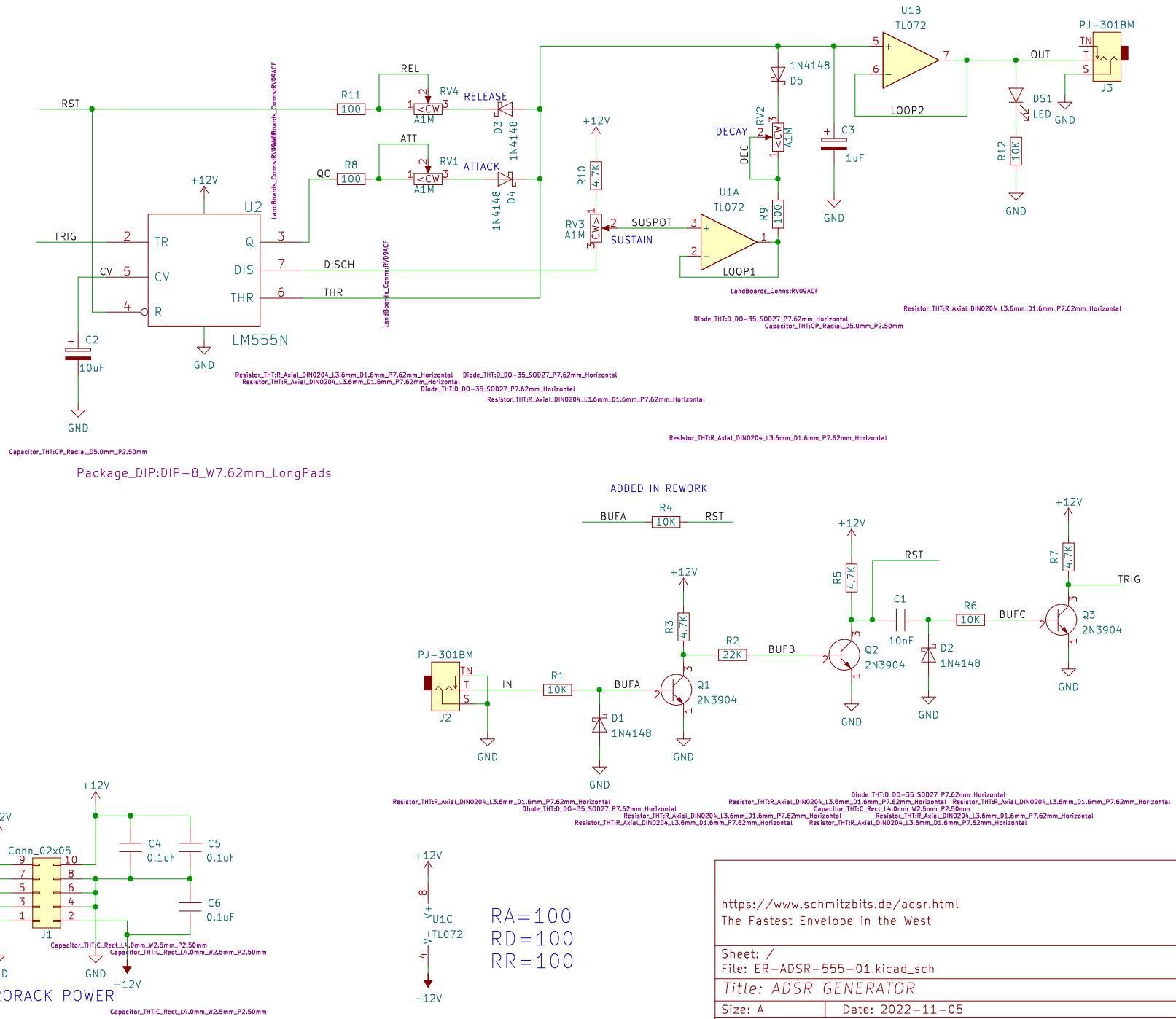
U1B
TL072
PJ-301BM
OUT
J3
LOOP2
1N4148
D5
DS1
LED
GND
R12
10K
C3
1uF
DECAY
RV2
A1M
DEC
R9
100
U1A
TL072
LOOP1
SUSPOT
SUSTAIN
RV3
A1M
R10
4.7K
+12V
RST
REL
R11
100
RV4
A1M
RELEASE
D3
1N4148
ATT
R8
100
RV1
A1M
ATTACK
D4
1N4148
QO
U2
LM555N
TRIG
CV
TR
CV
R
Q
DIS
THR
DISCH
THR
C2
10uF
GND
LandBoards_Conns:RV09ACF
Resistor_THT:R_Axial_DIN0204_L3.6mm_D1.6mm_P7.62mm_Horizontal
Diode_THT:D_DO-35_SOD27_P7.62mm_Horizontal
Capacitor_THT:CP_Radial_D5.0mm_P2.50mm
Package_DIP:DIP-8_W7.62mm_LongPads
ADDED IN REWORK
BUFA
R4
10K
RST
PJ-301BM
J2
IN
R1
10K
BUFA
D1
1N4148
R3
4.7K
Q1
2N3904
R2
22K
BUFB
R5
4.7K
C1
10nF
D2
1N4148
Q2
2N3904
R6
10K
BUFC
R7
4.7K
TRIG
Q3
2N3904
Conn_02x05
J1
C4
0.1uF
C5
0.1uF
C6
0.1uF
-12V
EURORACK POWER
U1C
TL072
RA=100
RD=100
RR=100
https://www.schmitzbits.de/adsr.html
The Fastest Envelope in the West
Sheet: /
File: ER-ADSR-555-01.kicad_sch
Title: ADSR GENERATOR
Size: A
Date: 2022-11-05
Rev: 2
KiCad E.D.A. kicad (6.0.1)
Id: 1/1