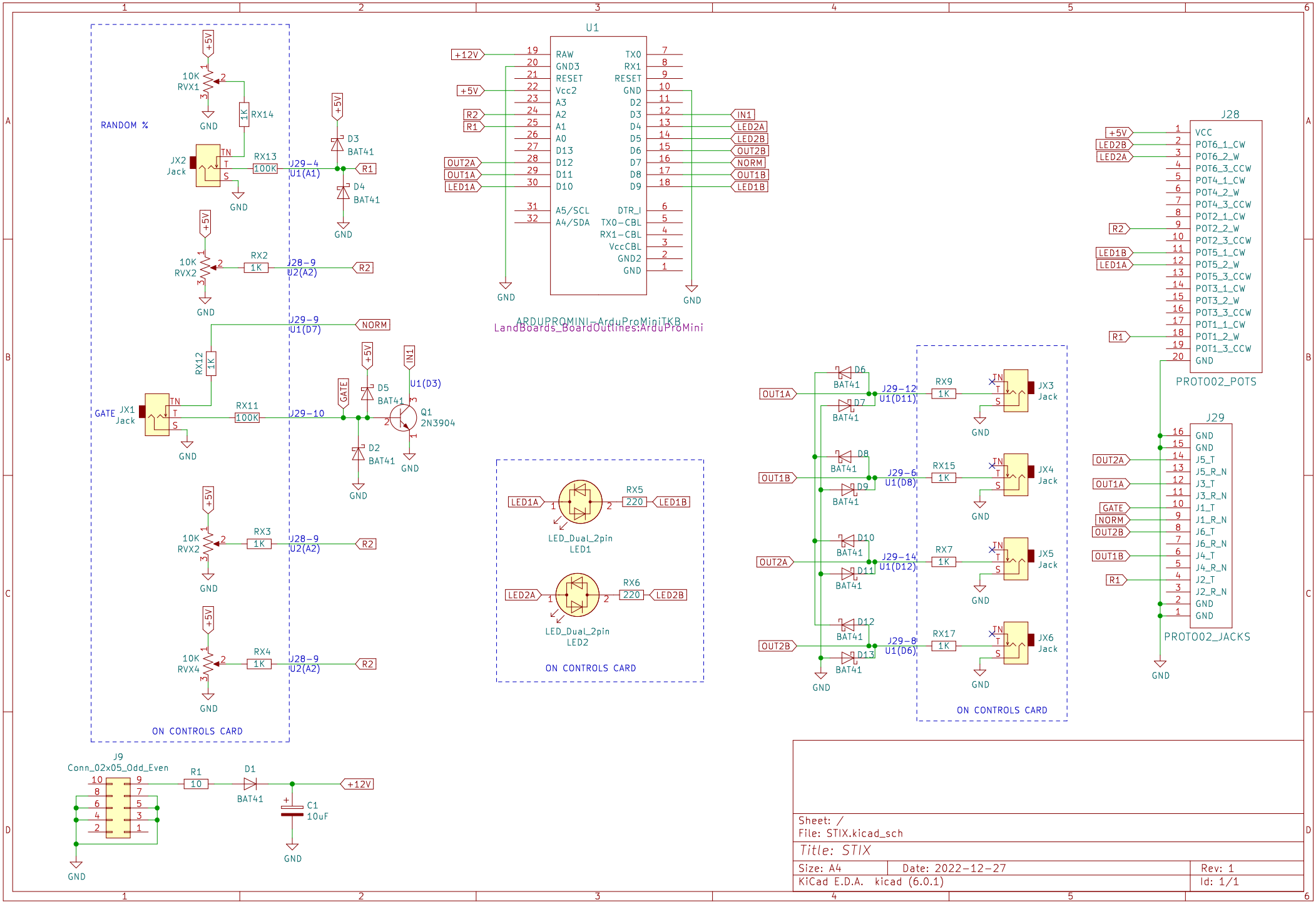

Sheet: /
File: STIX.kicad_sch

Title: STIX

Size: A4	Date: 2022-12-27	Rev: 1
KiCad E.D.A. kicad (6.0.1)		Id: 1/1