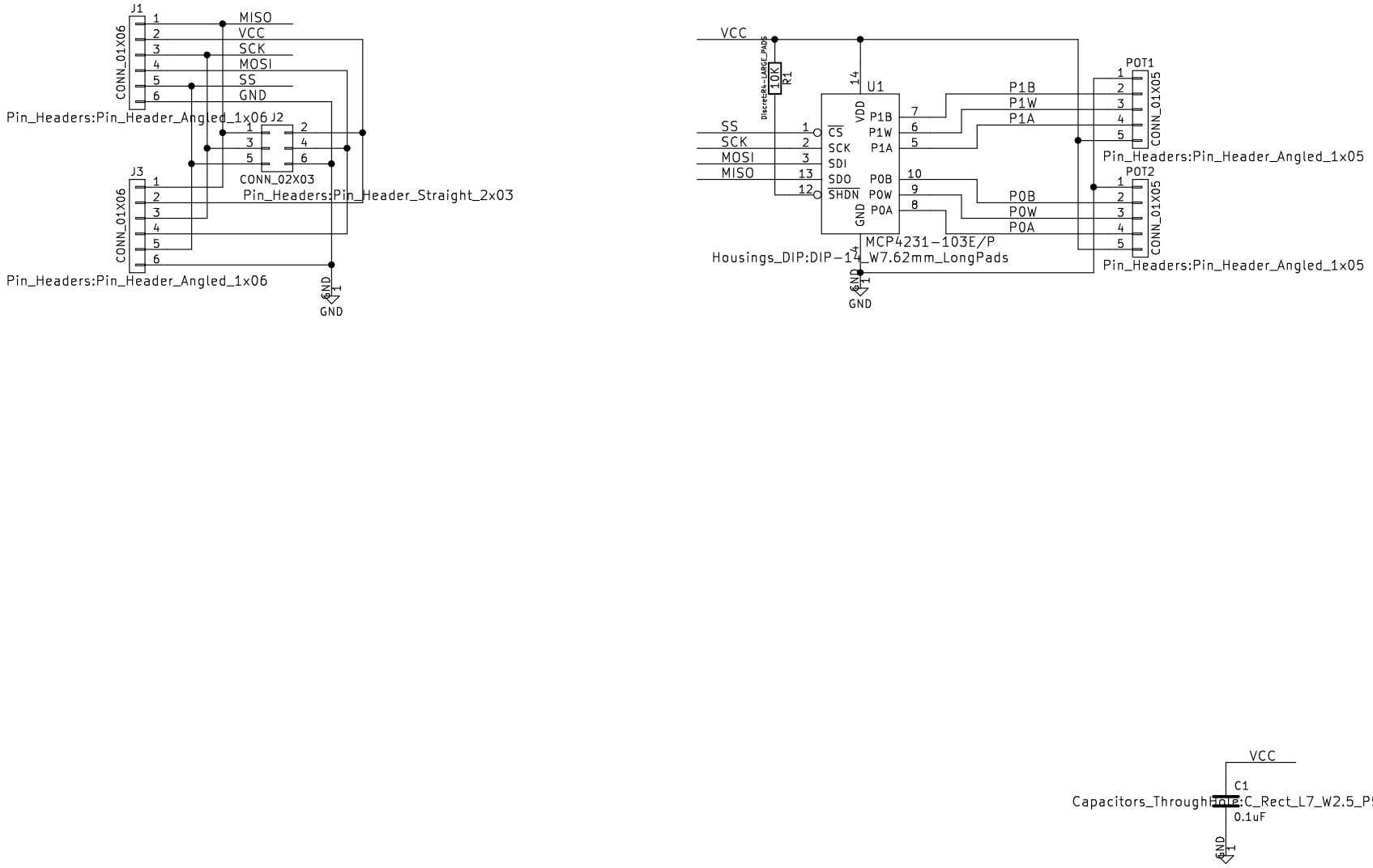

TEST1
TEST
DougsNewMods:TEST_BLK-REAR

MTG5
dougsLib:MTG-4-40
MTG_HOLE

MTG6
dougsLib:MTG-4-40
MTG_HOLE

MTG7
dougsLib:MTG-4-40
MTG_HOLE

MTG?1
dougsLib:MTG-4-40
MTG_HOLE

LAND-BOARDS.COM

Sheet: /
File: SPI-POTX2.sch

Title: SPI-POTX2

Size: A	Date: 28 jun 2012	**Rev: X1**
KiCad E.D.A. kicad (5.1.10)-1		Id: 1/1