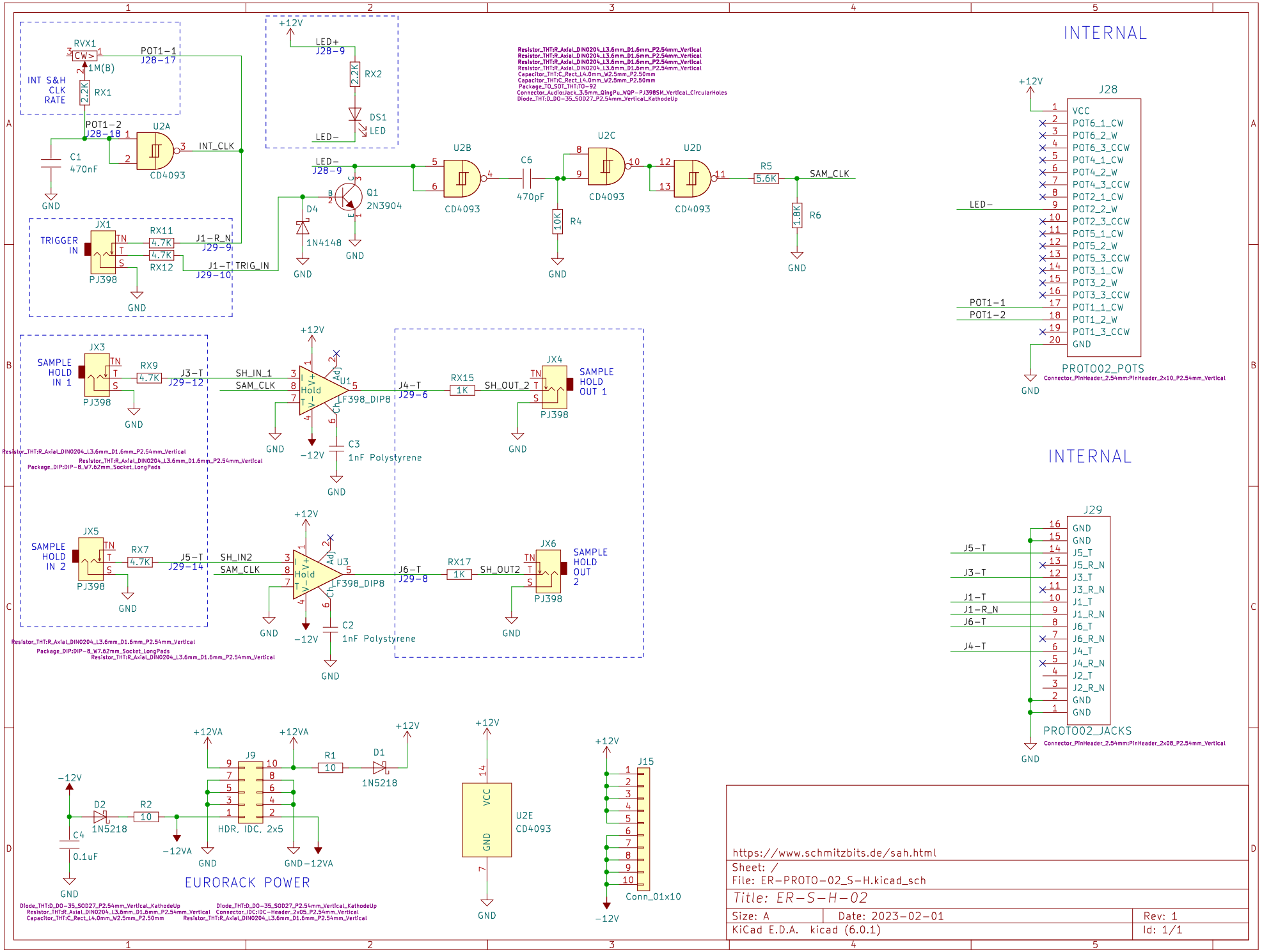
INTERNAL
INTERNAL
RVX1
CW>
1M(B)
POT1-1
J28-17
INT S&H
CLK
RATE
2.2K
RX1
POT1-2
J28-18
U2A
CD4093
INT_CLK
C1
470nF
GND
+12V
LED+
J28-9
2.2K
RX2
DS1
LED
LED-
LED-
J28-9
Q1
2N3904
D4
1N4148
U2B
CD4093
C6
470pF
U2C
CD4093
U2D
CD4093
R5
5.6K
SAM_CLK
R4
10K
R6
1.8K
TRIGGER
IN
JX1
PJ398
RX11
4.7K
RX12
4.7K
J1-R_N
J29-9
J1-T
J29-10
TRIG_IN
J28
VCC
POT6_1_CW
POT6_2_W
POT6_3_CCW
POT4_1_CW
POT4_2_W
POT4_3_CCW
POT2_1_CW
POT2_2_W
POT2_3_CCW
POT5_1_CW
POT5_2_W
POT5_3_CCW
POT3_1_CW
POT3_2_W
POT3_3_CCW
POT1_1_CW
POT1_2_W
POT1_3_CCW
GND
LED-
POT1-1
POT1-2
PROTO02_POTS
Connector_PinHeader_2.54mm:PinHeader_2x10_P2.54mm_Vertical
SAMPLE
HOLD
IN 1
JX3
PJ398
RX9
4.7K
J3-T
J29-12
SH_IN_1
SAM_CLK
U1
LF398_DIP8
Hold
Adj
Ch
C3
1nF Polystyrene
-12V
J4-T
J29-6
RX15
1K
SH_OUT_2
JX4
PJ398
SAMPLE
HOLD
OUT 1
SAMPLE
HOLD
IN 2
JX5
PJ398
RX7
4.7K
J5-T
J29-14
SH_IN2
SAM_CLK
U3
LF398_DIP8
C2
1nF Polystyrene
J6-T
J29-8
RX17
1K
SH_OUT2
JX6
PJ398
SAMPLE
HOLD
OUT
2
J29
GND
GND
J5_T
J5_R_N
J3_T
J3_R_N
J1_T
J1_R_N
J6_T
J6_R_N
J4_T
J4_R_N
J2_T
J2_R_N
GND
GND
J5-T
J3-T
J1-T
J1-R_N
J6-T
J4-T
PROTO02_JACKS
Connector_PinHeader_2.54mm:PinHeader_2x08_P2.54mm_Vertical
+12VA
J9
HDR, IDC, 2x5
R1
10
D1
1N5218
-12V
D2
1N5218
R2
10
C4
0.1uF
-12VA
GND
GND-12VA
EURORACK POWER
U2E
CD4093
VCC
GND
J15
Conn_01x10
https://www.schmitzbits.de/sah.html
Sheet: /
File: ER-PROTO-02_S-H.kicad_sch
Title: ER-S-H-02
Size: A
Date: 2023-02-01
Rev: 1
KiCad E.D.A. kicad (6.0.1)
Id: 1/1