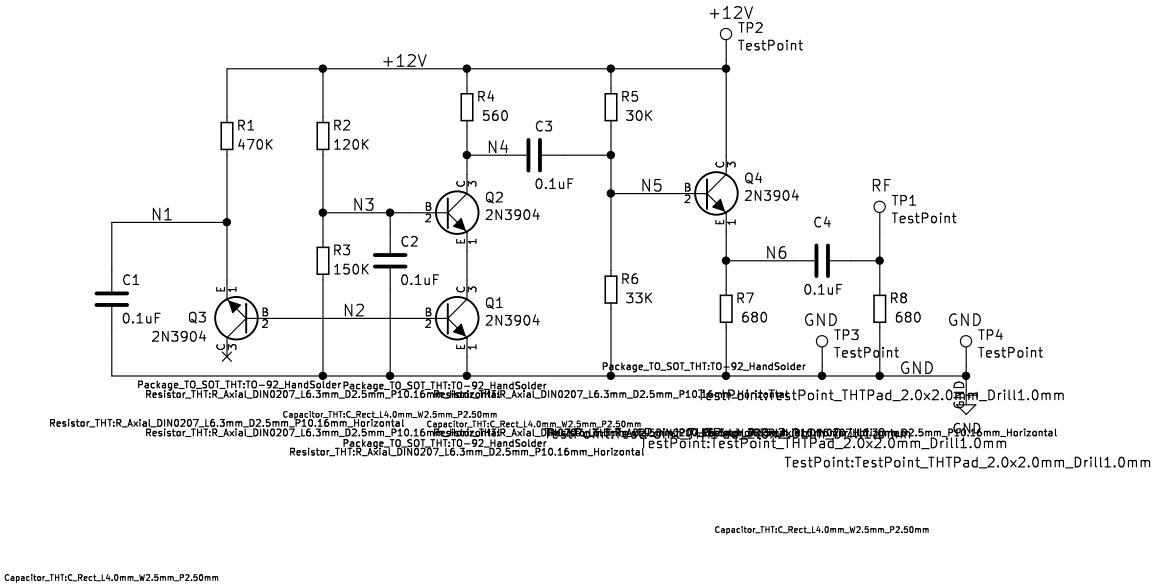

TESTED1

COUPON

LandBoards_MountHoles:MTG-4-40

MTG4

MTG_HOLE

land-boards.com

Sheet: /

File: NoiseGen.sch

Title: RF NOISE GENERATOR

Size: A	Date: 2021-08-17	**Rev: 1**
KiCad E.D.A. kicad (5.1.10)-1		Id: 1/1