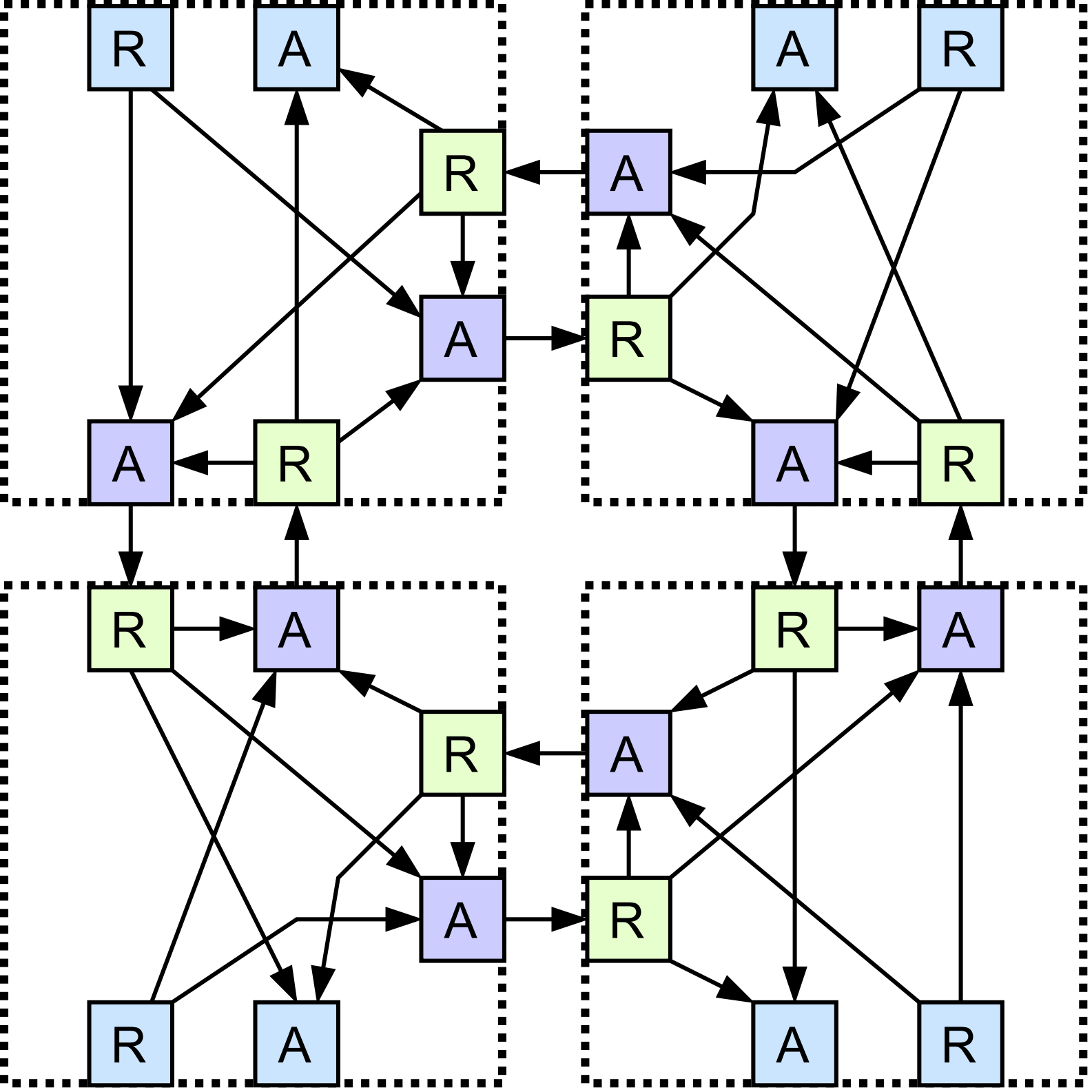
R
A
A
R
R
A
A
R
A
R
A
R
R
A
R
A
R
A
A
R
R
A
A
R