Automation in Construction 145 (2023) 104646

Contents lists available at ScienceDirect

Automation in Construction

journal homepage: www.elsevier.com/locate/autcon

Pavement crack detection based on transformer network

Feng Guo [a], Yu Qian [b,*], Jian Liu [c], Huayang Yu [d]

[a] School of Qilu Transportation, Shandong University, Jinan 250002, China
[b] Department of Civil and Environmental Engineering, University of South Carolina, Columbia, SC 29208, United States
[c] School of Qilu Transportation, Shandong University, Jinan 250002, China
[d] School of Civil Engineering and Transportation, South China University of Technology, Guangzhou 510641, China

ARTICLE INFO

Keywords:
Pavement crack detection
Transformer network
Shadow
Dense crack

ABSTRACT

Accurate pavement surface crack detection is essential for pavement assessment and maintenance. This study aims to improve pavement crack detection under noisy conditions. A novel model named Crack Transformer (CT), which unifies Swin Transformer as the encoder and the decoder with all multi-layer perception (MLP) layers, is proposed for the automatic detection of long and complicated pavement cracks. Based on a comprehensive investigation of training performance metrics and visualization results on three public datasets, the proposed CT model indicates enhanced performance. Experimental results prove the effectiveness and robustness of the Transformer-based network on accurate pavement crack detection. This study shows the feasibility of using a Transformer-based network for automatic robust pavement crack detection under noisy conditions.

1. Introduction

Surface crack is one of the most common pavement distresses which can propagate with traffic accumulation, leading to moisture penetration and more problematic road issues [1]. The severity of surface crack not only reflects pavement health status but also plays an important role in evaluating pavement serviceability and determining effective maintenance strategies. Thus, quantifying pavement surface crack accurately and efficiently is an essential part in the development of intelligent transportation infrastructure systems.

Throughout recent decades, pavement surface crack detection has evolved with the following stages: (*1*) *Manual Detection*. This refers to visual detection of the pavement surface by crews, which requires individuals to be on the site to look for cracks and make corresponding judgements [2]. This method is time-consuming, labor-intense, and may cause safety concerns. Similarly, it is subjective and impractical to maintain a consistent record for a large public road network. (*2*) *Traditional Image Processing*. These methods include the procedures of image preprocessing, image segmentation, and distress classification. Different types of operations such as the median filter [3,4], the Gaussian filter [5], and the Gabor filter [6,7] are adopted to smooth the image first and then conduct the image segmentation. Handcraft feature design could achieve good performance in distress classification with limited surface crack data, but it often lacks robustness in complex conditions and capability to process low level image data. (*3*) *Convolutional Neural Networks (CNNs) Approaches*. The advantages of CNNs in complex data processing are employed to detect and segment pavement surface cracks using the discriminative deep features in the raw image for the end-to-end model training.

By leveraging the high flexibility and automatic learning capability of CNNs, some practical issues of pavement surface crack detection such as similar intensity and width between sealed cracks and new cracks [8], the intensity inhomogeneity issue [9], and unsatisfactory computation accuracy and efficiency, and so on, have been better handled over the recent years [10]. Unfortunately, there are several remaining challenges that still restrain the performance of current CNN-based pavement surface crack detection methods, including limited public asphalt pavement surface crack image and annotation data, simple feature fusion between the low-level feature and the high-level feature, and ignoring long range dependency of pixels which can result in the disconnection of the semantic mask.

To address the aforementioned deficiencies in current pavement crack detection practices, we propose a new pavement crack image dataset named CrackSC including the annotations to facilitate model training with more complicated scenarios, such as heavy shadows and dense cracks. We propose a novel Crack Transformer (CT) model, leveraging the Swin-Transformer and SegFormer with the hierarchical architecture as the Encoder and a simplified Decoder structure in

* Corresponding author.
E-mail address: yuqian@sc.edu (Y. Qian).

https://doi.org/10.1016/j.autcon.2022.104646
Received 17 July 2022; Received in revised form 17 October 2022; Accepted 29 October 2022
Available online 12 November 2022
0926-5805/© 2022 Elsevier B.V. All rights reserved.

SegFormer to model the long-range dependency pixels at linear computational complexity. The contribution of this work can be summarized as follows:

- It is the first attempt to conduct the pavement crack detection with a Transformer-based network on the proposed low-volume roadway image dataset which includes common environmental noises (e.g., heavy shadows and fallen leaves) and varied crack representations;
- The proposed CT model is the first to prove that the Transformer-based network can effectively model the long-range and noisy pavement crack pixels with high accuracy and efficiency on three pavement crack image datasets with multiple indicators;
- A comprehensive investigation demonstrates that the Swin Transformer-based Encoder with hierarchical feature maps and shifted window has a superior capability to capture the fine and thin crack details, and the adopted Decoder of SegFormer with simplified MPL layers endows the network with high computational efficiency.

The rest of the paper keeps the following organization: *2. Related Works* section presents related efforts on the pavement surface crack detection with traditional image processing methods and previous deep learning-based approaches; *3. Proposed Methods* introduces the architecture of Encoder and Decoder; *4. Experimental Results and Analysis* section demonstrates the implementation details, datasets, comparison models, evaluation metrics and results; and *5. Conclusions* section summarizes the findings and the superiority of our model. Fig. 1 illustrates the logic and arrangement of this work.

2. Related works

In this section, we briefly discuss the recent accomplishments of pavement surface crack detection using both the image processing techniques and the CNNs.

2.1. Image processing techniques on the pavement surface crack detection

Image processing techniques usually have three steps (i.e., image preprocessing, image segmentation, and distress classification) to detect pavement surface cracks. The main objective of image preprocessing is to reduce the noise or the shadow in the captured image (see Fig. 2). Hence, the median filter [3,11], the Gaussian filter [12], the bilateral filtering [13], and the geodesic shadow-removal algorithm [5] were proposed to produce high quality noise/shadow-free images during the preprocessing stage.

After image preprocessing, segmentation is the following key step to distinguish the pavement surface crack from the background. Segmentation mainly includes two approaches which are the thresholding method and the edge detection method.

With respect to the binary image thresholding method which converts the color or gray scale image to the binary image and separates the image pixels to the foreground and background, classical Otsu and its enhancements [14,15], dynamic thresholding, global and local optimal thresholding [16], adaptive thresholding [17,18], etc., were applied to detect pavement surface cracks. However, under the non-uniform illumination and frequently changing pavement background, those thresholding methods often failed. The reason for this failure was that the thresholding methods largely relied on the statistical distribution of pixels but rarely considered the geometric features of pavement surface

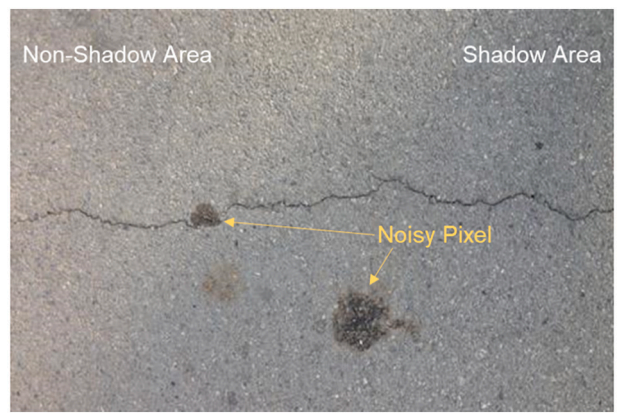

Fig. 2. A noisy pavement surface image including the shadow area.

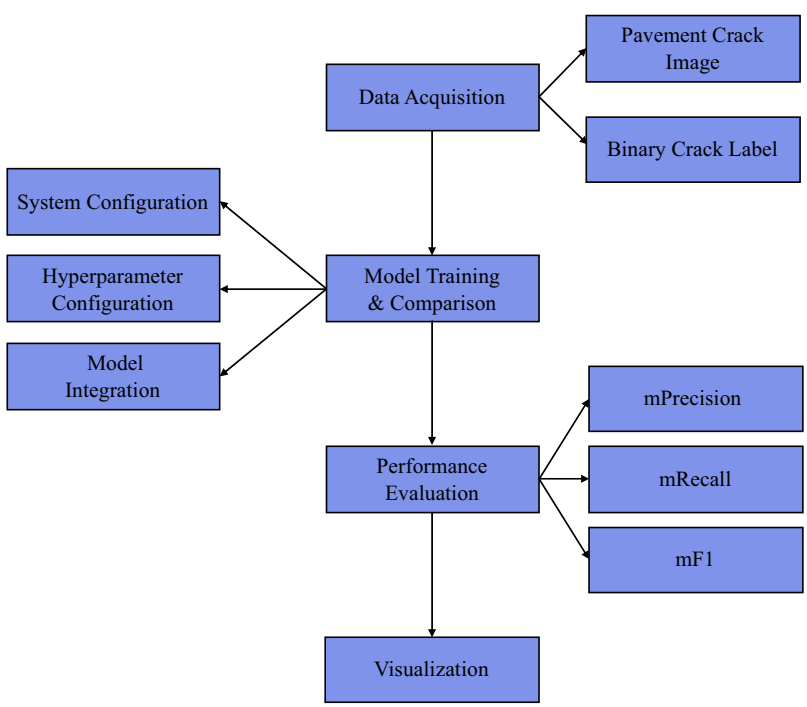

Fig. 1. The logic and arrangement of this work.

cracks. Besides, multilevel thresholding approaches, which suffered the exponential growth computational time of inference, often overburdened the computation.

As for the edge detection methods which are responsible for finding the boundaries of objects and detecting discontinuities in an image, the common edge detection operators (e.g. Canny operator, Sobel operator, etc.) [19,20], morphological filter [3], bidimensional empirical model decomposition [21], wavelet transform edge detection [22,23], etc., were developed over years for detecting different pavement surface textures. However, due to the limitations of edge detection on the overall whole crack shape, most of them were only successfully applied on the disjoint pavement crack detection [5].

2.2. CNNs on the pavement surface crack detection

With the rapid development of CNNs, new CNN-based models have been proposed with the advantages of being convenient for field implementation and having little dependence on image preprocessing. Recent studies have been focused on better utilizing deep learning-based computer vision models, including image classification, object detection, and semantic segmentation, to inspect civil infrastructure. Regarding the pavement surface crack detection and classification, deep CNN [24,25] and multiscale feature fusion network [26] were proposed to classify different types of cracks (e.g., alligator crack, block crack, edge crack, etc.) in the 2D or 3D images. Those methods achieved high accuracy in crack classification, but limited information, such as pavement distressed area and the crack severity, can be distilled to directly assist pavement evaluation and maintenance planning.

One potential solution was the object detection-oriented method, especially with the aid of bounding boxes (anchors). Object detection-oriented methods were successful in multiple challenging object detection conditions such as drone-based detection [27], dense object detection [28] and night time detection [29]. Object detection networks were not suitable for pavement surface detection [30,31] due to several practical difficulties: 1) There were multiple spatial scales and aspect ratios of pavement surface cracks. For instance, a bounding box would struggle to include a full longitudinal crack; (2) There was limited data available on the same type of cracks. For instance, there were limited alligator cracks in the public datasets, and the data volume was not sufficient to train a deep neural network.

Another alternative approach is the semantic segmentation-based method, which separates the background and the crack. Currently, the semantic segmentation-based methods have been the most popular in applications. For example, the context-aware fusion algorithm with the pixel-wise deep semantic segmentation network [32] can efficiently detect the pavement images with arbitrary sizes. The feature pyramid and hierarchical boosting network (FPHBN) [9] can fuse the low-level features and context information of pavement surface crack in a pyramid way. The other classical semantic segmentation approaches and their improvements such as SegNet [33], UNet [34], and DeepLabv3+ [35], were also proposed to conduct pavement crack detections. However, few efforts have been made to model long-range pixel dependencies while also prioritizing affordable computational costs.

3. Proposed methods

3.1. The encoder design with Swin-transformer architecture

Fig. 3 briefly introduces the architecture and the forward process of Swin-Transformer (tiny version) which mainly has four stages after patch partition. For instance, we take a random pavement RGB image with the dimension of 224 (Height) × 224 (Width) × 3 (Channel) as the input. First, the image is split into patches having no overlapping in the patch partition layer. Each patch is treated as the basic calculation unit. We follow the default configuration of Swin-Transformer to set the patch size as 4 and therefore the dimension of each patch is $4 \times 4 \times 3 = 48$. The output of the dimension of the patch partition layer is Height/4 × Weight/4 × Patch Size × Patch Size × Channel = $56 \times 56 \times 4 \times 4 \times 3 = 56 \times 56 \times 48$. After the patch splitting operation, the patch projection is applied in the linear embedding layer for the self-attention computation in the Transformer blocks. Meanwhile, a hyperparameter $C = 96$ is introduced in the linear embedding layer in the first stage. With two Swin-Transformer blocks, the output dimension of the first stage becomes $56 \times 56 \times 96$.

From the second stage, the patch merging operation is similar to the convolutional computation in CNNs which reduces the height and width to half of the original dimensions and doubles the number of channels. It needs to be mentioned that in the patch merging operation there is a 1×1 convolutional operation let there be four times as many channels rather than two times as many. Additionally, the Transformer blocks are solely responsible for feature transformation and would not introduce the dimensional changes. Thus, the output dimensions of stages 2, 3, and 4 are $28 \times 28 \times 192$, $14 \times 14 \times 384$, and $7 \times 7 \times 768$, respectively. Under this fashion, the hierarchical representation of features is generated, and this Transformer architecture can be replaced with the common backbones in the application.

To reduce the quadratic complexity in the standard Transformer computation of global self-attention, Swin-Transformer adopted the local window-based self-attention calculation. It needs to be mentioned that the regular window has no overlapping after the partition operation. Since the Swin-Transformer Block does not change feature dimensions, we take the output of Stage 1 as an example to explain the difference between a *window* and a *patch*. The default setting of each window is $M \times M = 7 \times 7$ and it means there are 49 patches in each window. Meanwhile, in Stage 1, the dimension of the output feature map is $56 \times 56 \times 96$ which means there are $56/M \times 56/M = 8 \times 8$ windows in the global self-attention calculation which is only 1/64 in terms of complexity as compared to the conventional Multi-head Self Attention Module (MSA).

As shown in Fig. 4, MSA is replaced with the W-MSA (regular window-based MSA) and SW-MSA (shifted window-based MSA) in two successive Swin-Transformer Blocks. It explains the reason there are even numbers (i.e., 2, 2, 6, 2) of Swin-Transformer Blocks in different stages as shown in Fig. 3. Except for the W-MSA and SW-MSA, the LayerNorm (LN) and two layers of Multi-layer Perception Module (MLP) are harnessed in the Swin-Transformer blocks. It needs to be mentioned that the W-MSA lacks the connections between windows and that restricts the feature circulation. To take advantage of cross-window connection and improve the computation efficiency, the SW-MSA adopts the shifted window partitioning strategy.

As illustrated in Fig. 5, the left part depicts the regular window-based self-attention calculation in layer l, and the right part shows the shifted-window based self-attention calculation in layer $l + 1$. From layer l to layer $l + 1$, it is clear to see the window partitioning is shifted and the self-attention calculation crosses the previous window boundaries, demonstrating the window connections. In layer l, the feature map size is 8×8 and there are 2×2 windows with 4×4 patches. In the SW-MSA module, a window is shifted (2,2) pixels from the position in layer l. Using the shifted window partitioning strategy, the computation in Swin-Transformer Blocks can be expressed in Eq. (1) to Eq. (4).

$$\widehat{Z}^{l} = \mathrm{W-MSA}\left(\mathrm{LN}\left(Z^{l-1}\right)\right) + Z^{l-1} \tag{1}$$

$$Z^{l} = \mathrm{MLP}\left(\mathrm{LN}\left(\widehat{Z}^{l}\right)\right) + \widehat{Z}^{l} \tag{2}$$

$$\widehat{Z}^{l+1} = \mathrm{SW-MSA}\left(\mathrm{LN}\left(Z^{l}\right)\right) + Z^{l} \tag{3}$$

$$Z^{l+1} = \mathrm{MLP}\left(\mathrm{LN}\left(\widehat{Z}^{l+1}\right)\right) + \widehat{Z}^{l+1} \tag{4}$$

where $\widehat{Z}^{l}$ is the output features of W − MSA module. $\widehat{Z}^{l+1}$ is the output

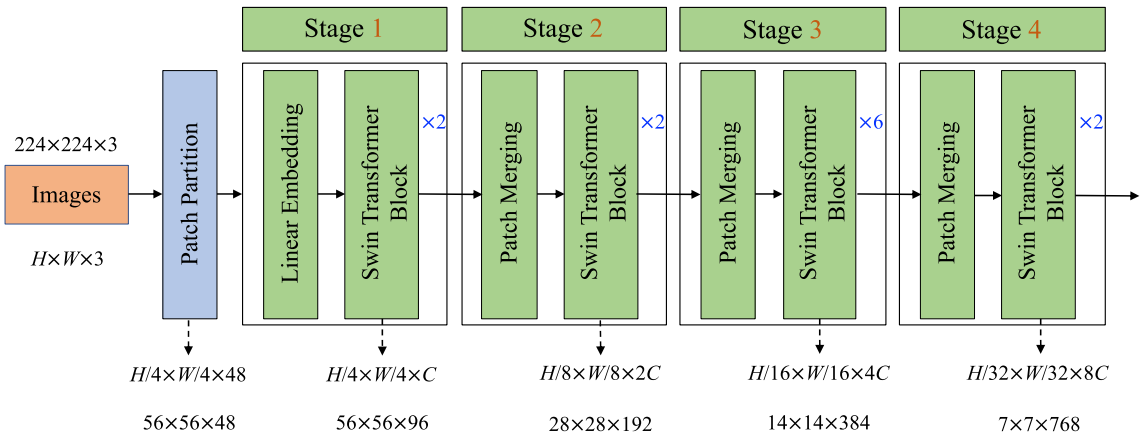

Fig. 3. The overview of Swin-Transformer architecture.

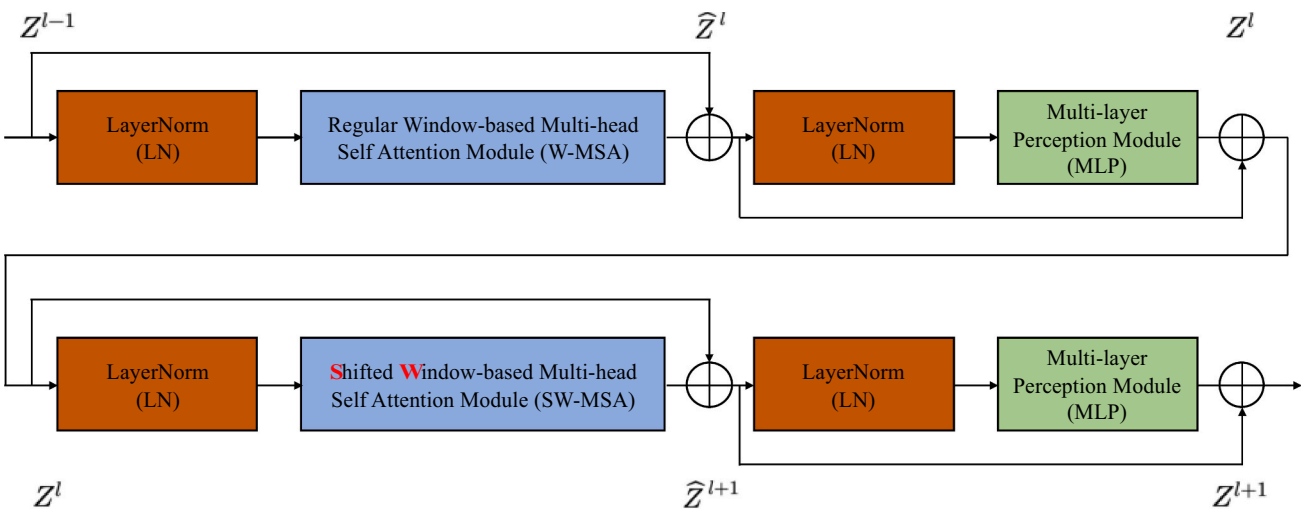

Fig. 4. The architecture of two successive Swin-Transformer Blocks.

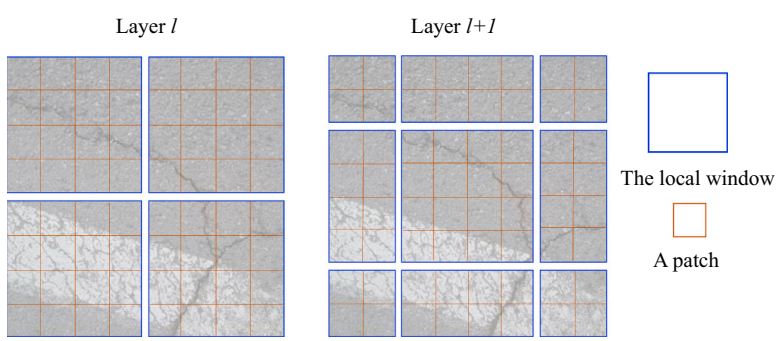

Fig. 5. The illustration of shifted window operation.

feature of SW-MSA module. $\hat{Z}^{l}$ and $\hat{Z}^{l+1}$ are the output features of MLP.

3.2. The decoder design with SegFormer decoder

To achieve an efficient and accurate segmentation performance, we follow the Decoder design in SegFormer and incorporate a lightweight Decoder with all MLP layers into our proposed Decoder structure. Compared to the traditional Decoder design, the structure can be simplified, and the computational demanding can be reduced.

The Decoder architecture is illustrated in Fig. 6. It can be found that the outputs in four stages (see Fig. 3) of the Encoder are fed into an MLP layer to unify the channel dimension. For instance, in Fig. 4, the output feature map of Stage 4 is 7 × 7 × 768. With this MLP layer, the output becomes 7 × 7 × 96. Afterward, the feature maps are up-sampled to H/4 × W/4 with 96 channels. In our case, the dimension is 56 × 56 × 96. Then, with repeated operations in the other three stages, the feature maps are concatenated together with the following prediction operation in the MLP layer. The computation can be referred to the following Eq. (5) to Eq. (8).

$$\hat{F}_i = \mathrm{Linear}(C_i, C)(F_i), \forall i \tag{5}$$

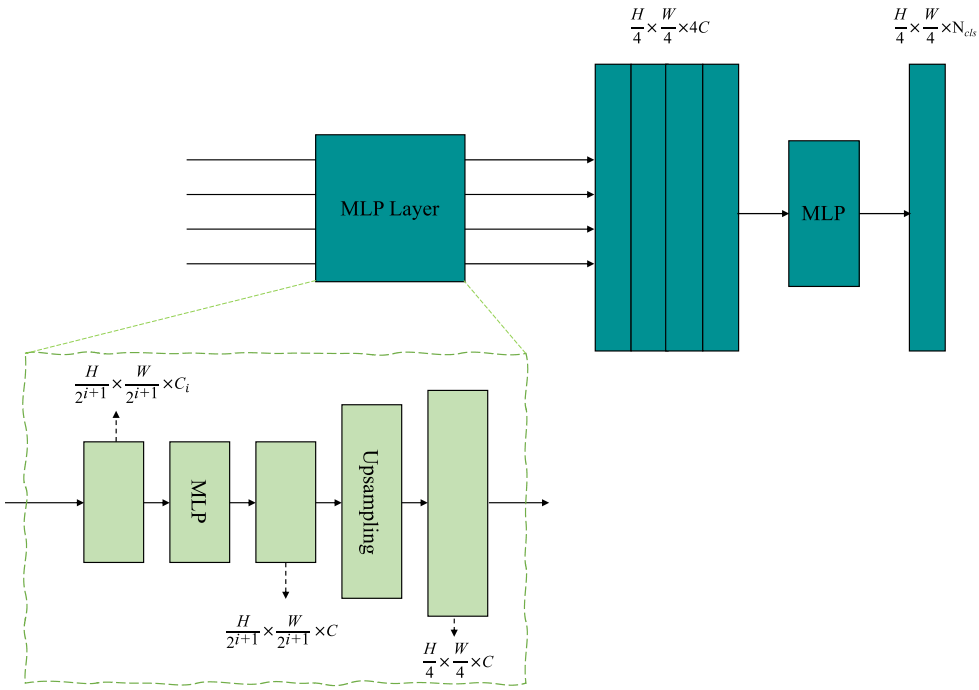

Fig. 6. The architecture of Segformer.

$$\widehat{F}_i = \text{Upsample}\left(\frac{W}{4}\times\frac{H}{4}\right)(\widehat{F}_i), \forall i \tag{6}$$

$$F = \text{Linear}(4C, C)(\text{Concat}(\widehat{F}_i)), \forall i \tag{7}$$

$$M = \text{Linear}(C, N_{cls})(F) \tag{8}$$

where F, F_i and $\widehat{F}_i$ refer to the feature map. Linear() refers to the linear operation. Concat() refers to the concatenate operation. Upsample refers to the up-sampling operation. N_{cls} indicates the class numbers. M is the predicted mask.

4. Experimental results and analysis

In this section, the details of experimental configuration are described. Three pavement crack datasets including the public CFD dataset [36], Crack500 [9] and our customized dataset, CrackSC,[1] are introduced. The selection of hyperparameters during training is presented. The training results of our proposed model and other models are discussed accordingly.

4.1. Implementation details

All networks implemented in this study are based on the Pytorch library developed by Facebook, Inc. A deep learning machine configured with the operating system of Ubuntu 20.04 LTS is used for model training. An NVIDIA 2080Ti graphics processing unit (GPU) with 12 GB memory embedded in the EasyAI platform is adopted. To fairly compare the model performance, MMSegmentation [37] which contains SOTA semantic segmentation models is used for model training, evaluation, and comparison. FCN [38], UNet [39], DeepLabv3 [40], PSPNet [41], and our proposed method are trained on the CFD dataset, Crack500, and our customized dataset, CrackSC. Compared to other semantic segmentation tasks such as self-driving and medical imaging, the public pavement crack image data is scarce. Therefore, to achieve better accuracy, the image augmentation approaches including rotation, cropping, and metric distortion are utilized to combat overfitting. Similar to the previous record [42], we do not apply augmentation in the evaluation.

Due to the expensive computation cost, we crop the whole image (320×480) to 128×128 in the training procedure. Batch normalization is adopted to accelerate the training with higher learning rates and model regularization to reduce the risk of overfitting. For the learning rate and the optimizer of each model, we have adopted the default setting in the MMSegmentation. As for the loss functions, we choose Dice Loss as the loss function in the Decoder. The reason we do not apply Binary Cross-Entropy (BCE) Loss or Focal Loss is that Dice Loss is widely used in the medical imaging which has the similar data imbalance issue as that in the pavement images.

4.2. Datasets

In general, there are six types of pavement cracks, which are alligator crack, block crack, edge crack, longitudinal crack, transverse crack, and reflection crack, introducing the non-negligible impacts on pavement structure [24]. Based on the field practices of local transportation agencies on evaluating pavement health conditions, previous studies have put more effort into the automatic crack detection and segmentation, rather than identifying the different crack types or their causes. To detect the pavement crack at the pixel level, three datasets including the public CFD dataset, Crack500, and our customized dataset CrackSC, are employed in this study.

4.2.1. CFD dataset

CFD is the first public pavement crack benchmark which contains 118 images associated with annotations. This dataset reflects the general road condition in Beijing, China around 2016, and the contained images' varied illumination, surface stain, greasy dirt, and complex background texture make the crack detection a challenging task. Following a previous study [43], we also randomly split the training set and validation set to 60% vs. 40%. To specify, there are 72 images for training and 46 images for validation. In the training phase, the network is trained from its completely untrained state, we apply the batch normalization, and

[1] available at https://github.com/jonguo111/Transformer-Crack

the batch size is set to 2.

4.2.2. Crack500 dataset

Crack500 pavement crack dataset is proposed by Yang et al. [9]. There are 500 original high-resolution images (2000 × 1500 pixels) collected by cell phone cameras on the main campus of Temple University. To enlarge the original image dataset, each image is cropped and only the cropped images containing crack pixels are kept. From the released dataset, there are 1896 images for training, 348 images for validation, and 1124 images for testing. Similar to the previous study [44], we adopt 1896 images for training and 1124 images for validation and testing. The ratio between training, validation, and testing is around 1.7:1. Since there is a fixed setup for training, validation, and testing, we do not shuffle or re-organize the image dataset. We resize each image and its annotation to 320 × 640 based on the training needs of different models. In the training phase, the batch size is 2 and the training is initialized from scratch.

4.2.3. CrackSC dataset

Compared to the CFD and Crack500 datasets, we propose a novel pavement crack image dataset that focuses on the heavy shadow and dense crack generated in the commonly negated application (e.g., low volume, local roads). The local roads often present more cracks due to limited maintenance budgets. In addition, the tree shadows, fallen leaves, and abundant mosses introduce more distractions in the detection of dense cracks. To address the above challenges and share valuable information with the research community, we collect pavement surface crack images using iPhone 8 around Enoree Ave, Columbia, SC.

A total of 197 images representing the actual pavement surface condition of local roads are collected. The annotation files are prepared using a Paint software in the Windows system to label the cracks. In this way, pavement surface cracks along with uneven thickness can be presented in the initial label files. Since the final labels are binary images, we convert the initial label files (RGB format) to the final label files (Binary format). Similar to the CFD dataset, we randomly split the training set and validation set to 60%:40%. The batch size is two, and batch normalization is applied when the training starts from scratch.

4.3. Comparison models

Recently, since pavement surface crack detection is an emerging AI implementation in civil engineering, we briefly summarize the popular models achieved promised performance in the literature.

UNet: The initial application of UNet is biomedical image segmentation for identifying the neuronal structures in electron microscopic stacks. Leveraging the U-shaped CNN architecture, UNet can complete the semantic segmentation tasks in a fast and precise manner. It is widely used as a baseline to compare the pavement crack detection performance.

FCN: FCN is a CNN structure without using the fully connected layers in the model design. Solely utilizing convolution, pooling, and upsampling layers, the numerous redundant network parameters can be curtailed and therefore make the model faster to train. The skip connection employed in the model structure can recover the lost information of fine-grained spatial information, which is important to present the details in the pavement crack detection.

*DeepLabv*3: DeepLabv3 is developed to improve the semantic segmentation performance at multiple scales. Taking advantage of atrous convolution, atrous spatial pyramid pooling module, and global average pooling, DeepLabv3 boosts the semantic segmentation performance using image-level features encoding global context.

PSPNet: PSPNet is proposed to utilize a pyramid parsing structure and the pyramid pooling module to benefit the final prediction with the local and global clues. Taking advantage of the pretrained CNN and the dilated network, the feature map can be extracted. The additional context information can be provided with the global pyramid pooling module.

4.4. Evaluation metrics

In this study, we adopt mean precision (mPrecision), mean recall (mRecall), and mean F1 (mF1) score to assess the model performance. We set two classes which are the background and the pavement crack, respectively. For each class, we calculate the precision, recall, and F1 score first and then achieve their mean values. Specifically, the general F1 score is the weighted average of precision and recall. Taking the false positive (FP) and false-negative (FN) into account, the F1 score is more representative when facing an imbalanced dataset. Unlike the general semantic segmentation task, the evaluation of pavement cracking needs to set the pixel tolerance margin since it is extremely difficult to obtain the ground truth pixel area of the crack. In this study, we set the tolerance margin as 2 pixels. For instance, if the prediction is a crack and it is within 2 pixels away from the ground truth crack pixel, it is treated as the true positive (TP). The definition of precision, recall, F1 score and their mean values can be referred to the following Eqs. 9 to 14.

$$Precision = TP/(TP + FP) \tag{9}$$

$$Recall = TP/(TP + FN) \tag{10}$$

$$\mathrm{F1} = (2 \times Precision \times Recall)/(Precision + Recall) \tag{11}$$

$$mPrecision = \sum \mathrm{Precision} \Big/ N \tag{12}$$

$$mRecall = \sum \mathrm{Recall} \Big/ N \tag{13}$$

$$mF1 = \sum F1 \Big/ N \tag{14}$$

where N is 2, representing the number of classes.

4.5. Results and discussion

In this section, we introduce the visualized results of different models on the three available datasets, respectively.

4.5.1. Results of CFD dataset

In this part, we compare the segmentation results of four models on the CFD dataset. Because the original setting of FCN, PSPNet, and DeepLabv3 introduces undesirable results, we use the UNet as the Encoder and the Decoder of FCN, PSPNet, and DeepLabv3 to integrate the model of FCN-UNet, PSPNet-UNet, and DeepLabv3-UNet for fair comparison. Table 1 presents the experimental results of the mF1 score, mPrecision, and mRecall of different models; it is clear that our proposed model obtains satisfying records on the above three indicators. The mF1 score is 4.75%, 8.40%, and 2.59% higher than FCN-UNet, PSPNet-UNet, and DeepLabv3-UNet, respectively. The mPrecision is −1.35%, 1.24%, and 3.40% higher than FCN-UNet, PSPNet-UNet, and DeepLabv3-UNet, respectively. The mRecall is 10.74%, 15.25%, and 1.64% higher than FCN-UNet, PSPNet-UNet, and DeepLabv3-UNet, respectively. However, compared to Tang et al. [45], our results are slightly lower. This can be attributed to the refinement of the ground truth labeling of the CFD dataset by the cited works. Compared to other studies listed in Tang et al. [45], our results achieve a better recall score which is essential in

Table 1
Evaluation results of different models.

Model	mF1 (%)	mPrecision (%)	mRecall (%)
CT	**94.60**	92.94	**96.41**
FCN-UNet	90.31	**94.21**	87.06
PSPNet-UNet	87.27	91.80	83.65
DeepLabv3-UNet	92.21	89.88	94.85

inspecting pavement surface cracks.

Fig. 7 shows the visualized results of three randomly selected images. Fig. 7 (a1) and (a3) have closed cracks. Fig. 7 (a2) presents a long, thin crack in the middle of the image. In the first row, it is clear to see that Fig. 7 (c1), that is segmented by our proposed model, is closest to Fig. 7 (b1), the ground truth labeling. Fig. 7 (d1) segmented by FCN-UNet loses the short crack information and can predict the long crack well. Fig. 7 (e1) is the segmentation result generated by PSP-UNet. Although it shows the outlines of the cracks, the width of the crack cannot be well predicted. Regarding Fig. 7 (f1) which predicted by DeepLabv3-UNet, it has a similar performance to Fig. 7 (d1), which loses the prediction information in the left part.

The second row presents the long, thin crack representative segmentation results. Clearly, our proposed model (see column c in Fig. 7) has the closest results to the ground truth on both the length and orientation perspectives. The straight and thin crack, which is common in the field, should be manageable in the prediction. However, the visualized results using popular models prove it is quite challenging to fulfill. There are misleading predictions from Fig. 7 (d2) to (f2) with extended, shorter, and disconnected predictions. As for the third row, the input contains the closed crack and the joint. Similar to previous results, our proposed model shows the best performance from both these two perspectives. From Fig. 7 (d3) to (f3), there are disconnected predictions on the joint, indicating the weakness of the segmentation performance using the popular models.

4.5.2. Results of Crack500 dataset

From Table 2, it is easy to find that our proposed CT model achieves the best mF1 score among all the models. We applied ResNet 50 as the Encoder structure in DeepLabv3, PSPNet, and FCN. In FCN-UNet, the UNet is applied as the Encoder, and the FCN head is designed as the Decoder. Since other UNet-based structures have an unsatisfactory

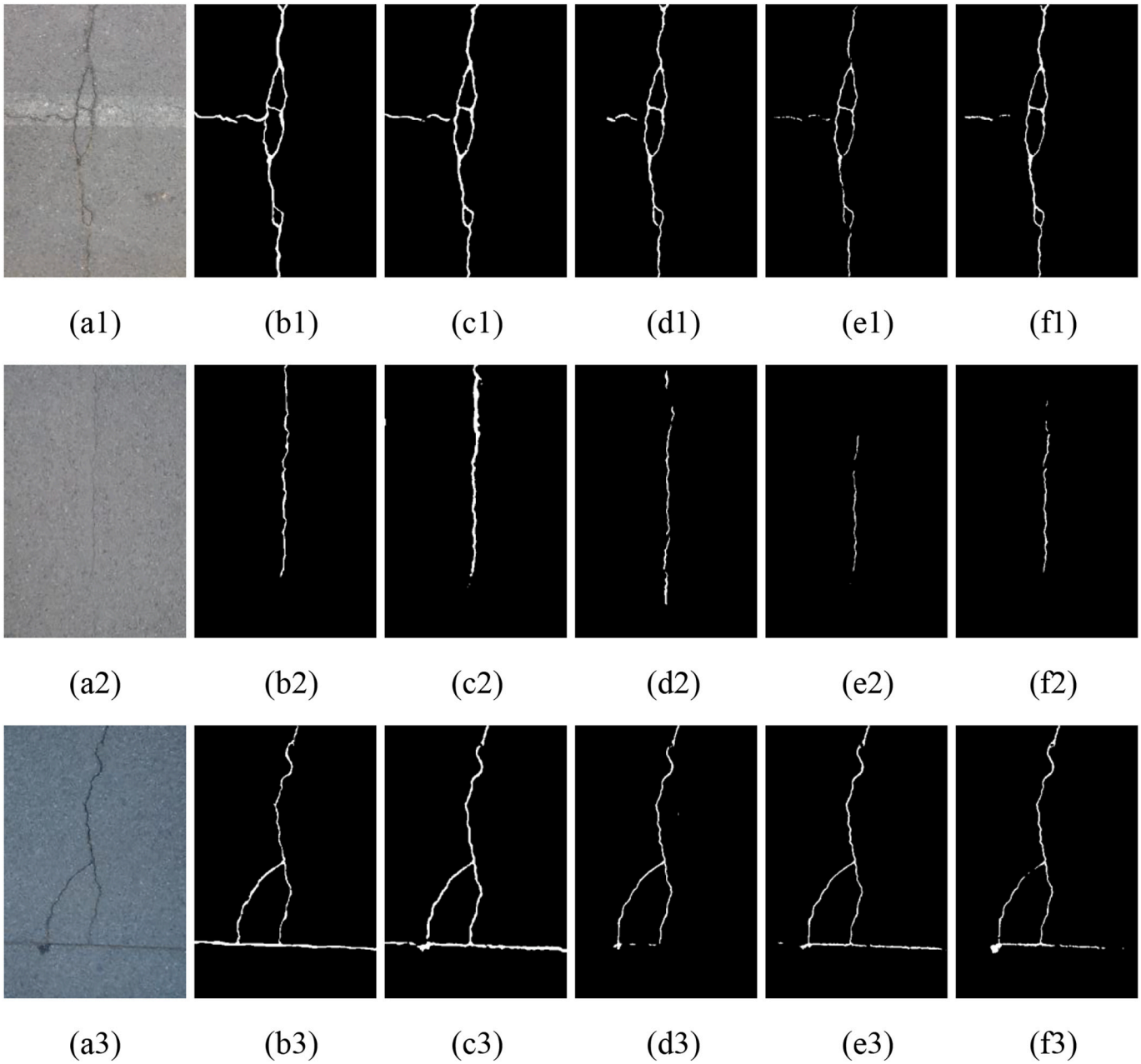

Fig. 7. Segmentation results of different model. a(i) RGB input; b(i) Ground Truth label; c(i) Transformer results; d(i) FCN-UNet results; e(i) PSP-UNet results; f(i) DeepLabv3-UNet results.

Table 2
Evaluation results of different models.

e	mF1 (%)	mPrecision (%)	mRecall (%)
CT	**88.73**	**87.45**	**90.12**
FCN-UNet	79.04	75.99	83.12
FCN	83.07	80.15	86.74
PSPNet	80.99	81.00	80.98
DeepLabv3	83.19	81.39	85.26

performance, we only adopt FCN-UNet for comparison. Regarding the mF1 score, it is 12.26%, 6.81%, 9.56%, and 6.66% higher than FCN-UNet, FCN, PSPNet, and DeepLabv3, respectively. As for mPrecision, it is 15.08%, 9.11%, 7.96%, and 7.45% higher than FCN-UNet, FCN, PSPNet, and DeepLabv3, respectively. With respect to mRecall, it is 8.42%, 3.90%, 11.29%, and 5.70% higher than FCN-UNet, FCN, PSPNet, and DeepLabv3, respectively. Fig. 8 presents some randomly selected visualization results. Unlike previous results, we resized the images to 320 × 640 because each image side should be divisible by 16 which is required by the default setting. Thus, it introduces an unfair comparison with previous results, and we only compare the training results of different models within the MMSegmentation framework.

From Fig. 8, it is easy to see that our proposed model has superior long-distance modeling performance. All three images have long cracks with varying width. In column a and column b, there are RGB input

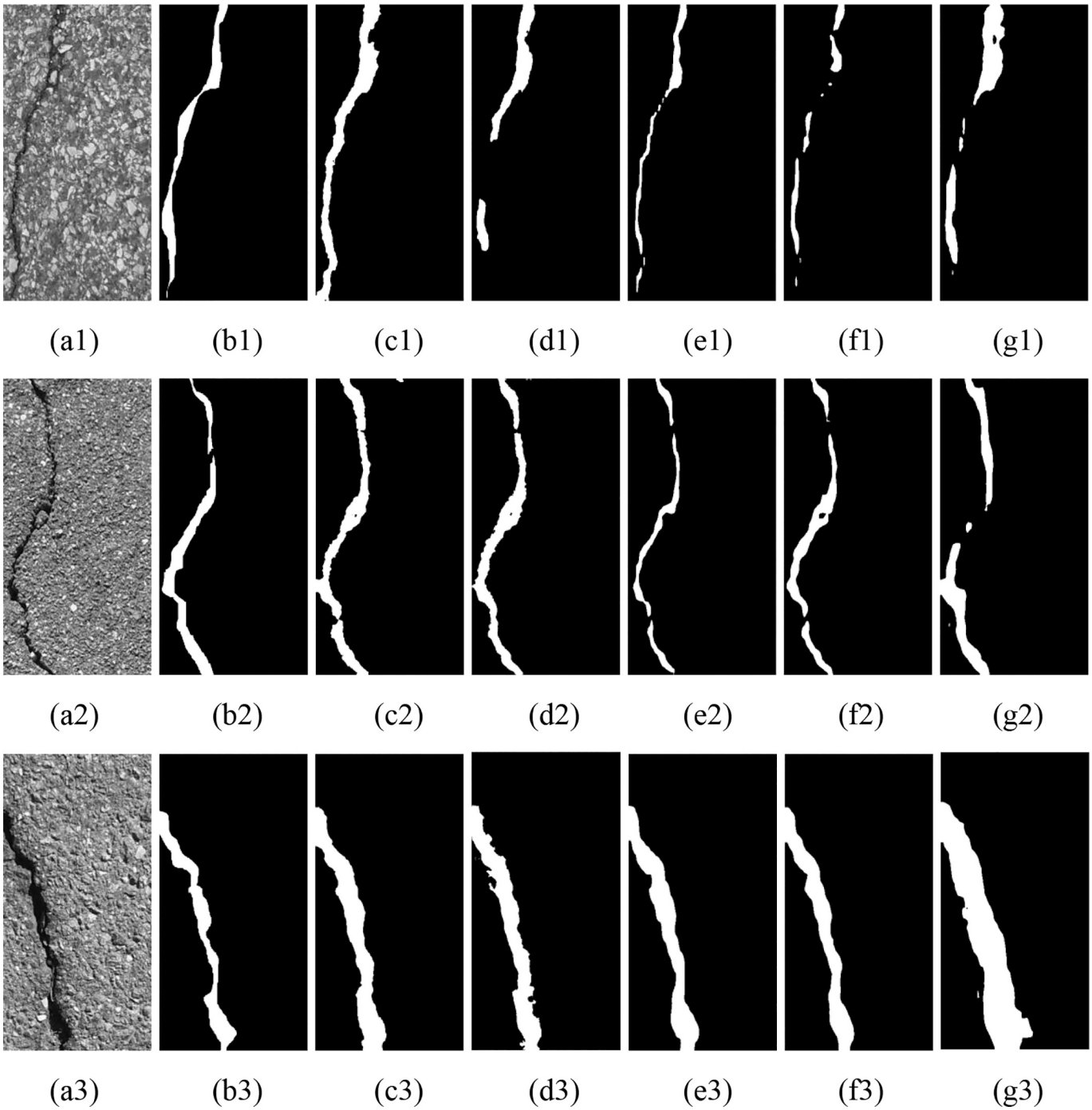

Fig. 8. Segmentation results of different model. a(i) RGB input; b(i) Ground Truth label; c(i) Transformer results; d(i) FCN-UNet results; e(i) FCN results; f(i) PSPNet results; g(i) DeepLabv3 results.

images and binary label images, respectively. From column c to column g, they are prediction results of our proposed CT, DeepLabv3, PSPNet, FCN-UNet, and FCN, respectively. From Fig. 8 (c1), (c2) and (c3), we can see that our proposed model has the closest results to the ground truth label in the perspective of both length and propagation orientation. Compared to Fig. 8 (a3), the crack segmentation of Fig. 8 (a1) and (a2) is more difficult since the cracks in Fig. 8 (a1) and (a2) are longer and more winding. In the first row, FCN performs better than DeepLabv3, PSPNet, and FCN-UNet, but the prediction shows a considerably thinner crack compared to the ground truth labeling. Note Fig. 8 (d1), (e1), and (f1) cannot present a full crack, as the one shown in Fig. 8 (b1).

Compared to Fig. 8 (b1), the prediction in Fig. 8 (c1) has a more consistent width throughout the crack, indicating the fine features cannot be distributed well, which points out the future modification direction. In the second row, all predictions have the correct shape, as shown in Fig. 8 (b2). However, the breaking points of Fig. 8 (e2), (f2), and (g2) are not the same as the ground truth labeling. In fact, it is easy to find that there is no breaking point as predicted in Fig. 8 (c2) and the RGB input. The breaking point in Fig. 8 (b2) indicates some amendments are needed for some of the ground truth labeling in the Crack500 dataset. In the third row, it is easy to find that all predictions have the correct angle and shape, as shown in Fig. 8 (b3). The predictions of Fig. 8 (c3) and (g3) have the closest results to ground truth labeling, but there is still room to improve the fine details regarding preserving the actual width along the crack.

4.5.3. Results of CrackSC dataset

Table 3 shows the experimental results of mF1 score, mPrecision, and mRecall on our proposed CrackSC dataset. It can be found that our proposed model achieves the highest mF1 score, mPrecision, and mRecall which are 90.01, 90.09, and 89.93, respectively. Regarding mF1score, it is 10.33%, 11.18%, and 16.17 higher than FCN-UNet, PSP-UNet, and DeepLabv3-UNet, respectively. With respect to mPrecision, it is 13.09%, 9.57% and 9.20% higher than FCN-UNet, PSP-UNet, and DeepLabv3-UNet, respectively. As for the mRecall, it is 7.32%, 12.71%, and 21.74% higher than FCN-UNet, PSP-UNet, and DeepLabv3-UNet, respectively.

Fig. 9 provides the randomly selected segmentation results from our proposed CrackSC dataset. Compared to the CFD dataset, the CrackSC dataset is more realistic and more difficult to handle. There are heavy shadows and leaves on the surface of the pavement, which render the cracks to be covered or blended into the background, and thin and shallow cracks make the detection more challenging. In the first row of Fig. 9, it is easy to find that Fig. 9 (c1), which our proposed model generates, can ease the negative impact of heavy shadows on the cracks. Regarding Fig. 9 (d1), it can be found that the DeepLabv3 model cannot predict long cracks and capture fine crack information. In the Fig. 9 (e1) and (f1), it can be found that there are many white dots which are false predictions of cracks. When analyzing the positions of the white dots, it can be found that most of them are located in the shadow region, indicating the impact of heavy shadow on false predictions.

The second row shows the prediction results of thin and shallow cracks using different models. Without a close look, it is difficult to find the location and shape of the cracks ourselves. In Fig. 9 (a2), compared to the left and middle parts, the right part has a larger width making the prediction easier. It is also proved by the prediction results using FCN-UNet, PSP-UNet, and DeepLabv3-UNet in Fig. 9 (d2), (e2), and (f2), respectively. As mentioned, our model has superior modeling capabilities for long-range pixel dependencies. Even though there are thin cracks on the left and right parts of Fig. 9 (a2), Fig. 9 (c2) still stands out with much better predictive performance than other models.

Beyond that, the prediction results of Fig. 9 (a3) are also interesting. Fig. 9 (a3) is a very noisy image with shadows and tree leaves. All of them render the Encoder and Decoder of features become problematic in training. Without a hierarchical feature extraction system, or if the feature extraction system is not sensitive, the prediction would largely fail. Even though UNet series models can handle the images without shadows or leaves in CFD and CrackSC well, they lack the ability to leverage the context information on both the local and global levels, making the model fail to filter out the irrelevant background. Thus, it is not surprising that Fig. 9 (d3), (e3), and (f3) would fail. Our proposed model can predict long-range and relevant pixels well and that explains the reason Fig. 9 (c3) is the closest prediction to ground truth labeling by taking advantage of feature circulation and cross-window connection.

It needs to be mentioned that even though our proposed model outperforms other models in the complicated environmental conditions investigated in this study, there is still large room for further improving the detection accuracy. From Fig. 9 (c1), we can find that there are extended cracks among the prediction graph, indicating its "aggressive" prediction effect, which may negatively evaluate a section of the roadway during detection, causing unnecessary extra labor work. Meanwhile, in both Fig. 9 (c1) and (c3), the proposed model ignores some short cracks, indicating the long-range pixel dependency modeling ability needs to be adjusted with adaptive window sizes, and the spatial feature fusion for short cracks and long cracks should be considered for future model development.

Table 3
Evaluation results of different models.

Model	mF1 (%)	mPrecision (%)	mRecall (%)
CT	**90.01**	**90.09**	**89.93**
FCN-UNet	81.58	79.66	83.8
PSPNet-UNet	80.96	82.22	79.79
DeepLabv3-UNet	77.48	82.50	73.87

4.5.4. Computational efficiency

In this part, we compare the computational efficiency of the aforementioned models. Two indicators, including the floating point operations (FLOPs) for a single forward pass, and frames per second (FPS) which indicates the inference speed, are adopted for evaluation. All inference procedures follow the default settings of MMSegmentation, and the image size of each image dataset is kept the same in both the training and inference stages for fair comparisons. Fig. 10 presents the comparison results of the computational efficiency.

In general, a high FLOPs number indicates a low inference speed and vice versa. Regarding the FLOPs values of different models, it can be found that our proposed CT achieves the lowest value which is 17.61G (1GFLOPs = 1billion floating point operations). It is 85.2%, 84.8%, 85.2%, 84.8%, 83.2%, and 88.9% lower than FCN-UNet, PSPNet-UNet, DeepLabv3-UNet, FCN, PSPNet, and DeepLabv3, respectively. Thus, the efficient inference brought by the SegFormer Decoder which takes advantage of the simplified MLP layer is proven.

With respect to the FPS indicator, we can easily find that the UNet-based Encoders are slower. Based on the investigation, the "slide" mode of MMSegmentation introduces this phenomenon. If the "whole" mode is chosen in the inference, the inference speed can increase, but the detection accuracy will be dropped significantly. Consistent with the expectations, CT has the best performance on the FPS indicator. Further, the models of FCN-UNet, PSPNet-UNet, DeepLabv3-UNet, FCN, PSPNet, and DeepLabv3 are 96.05%, 95.11%, 95.02%, 43.70%, 43.61%, and 53.10% lower than CT, strongly suggesting a high computational efficiency.

In summary, the proposed model can benefit the development of the detection vehicle which mounts cameras frontally and facing downward to collect high quality image data. Leveraging the high speed of our proposed model, theoretically the detection speed can achieve 40–60 mph considering each frame may cover 12 ft. of the single line width and 6 ft. of the length. The inference speed is around 109 fps with a patch size of 320 × 480 as listed in Fig. 10.

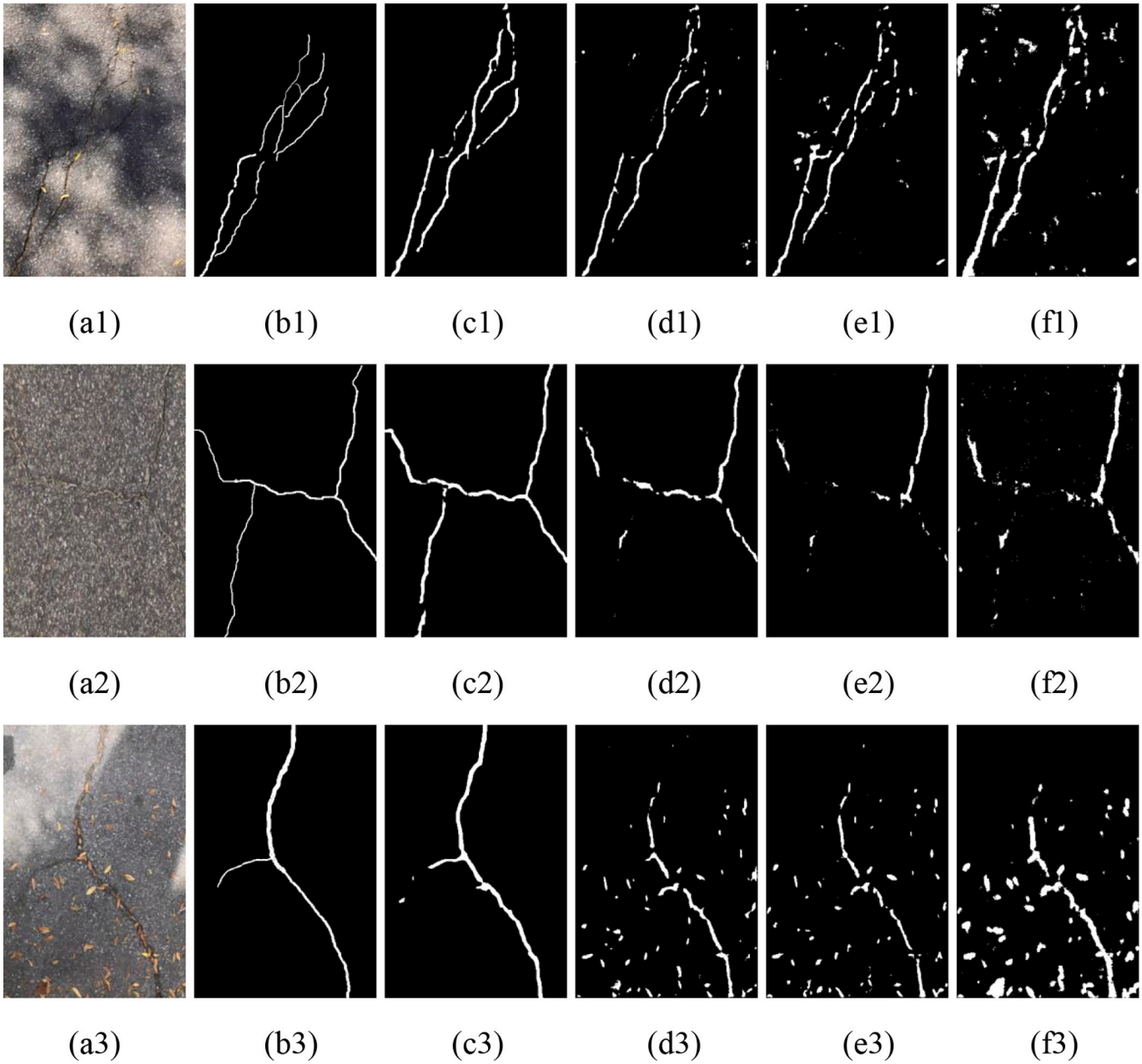

Fig. 9. Segmentation results of different model. a(i) RGB input; b(i) Ground Truth label; c(i) Transformer results; d(i) FCN-UNet results; e(i) PSP-UNet results; f(i) DeepLabv3-UNet results.

4.5.5. Discussion

Through the evaluation of different performance indicators from Tables 1 to 3 and the comparison of visualized detection from Figs. 7 to 10, we can find that even the proposed CT model and other models are based on the Encoder-Decoder structure, there are large performance variations on the crack detection under different scenarios. From the perspective of long, straight, and varied width cracks modeling, we can find that Swin-Transformer outperforms other UNet and ResNet-based backbones since Swin-Transformer has a better ability to learn the explicit global and long-range semantic information interaction.

In contrast, using UNet and ResNet as the backbone, the whole network could introduce more features loss because of the successively convolutional operations which intrinsically impose the inductive biases. Regarding the detection performance with serious noises such as the heavy shadows or fallen leaves, the shifted window operation of Swin-Transformer module can make the proposed CT efficiently complete the self-attention calculation of cracks. In this way, the informative features of cracks would be adaptively captured on different regions. Conversely, the UNet and ResNet without effective self-attention cannot avoid the negative impact of environmental noises, rendering an inferior detection performance.

Considering the inference speed, the adopted lightweight Decoder proves the success of the all-MLP-layers strategy. Taking advantage of the induced features generated by the Encoder structure, both the local and non-local attentions are produced, advancing the efficient feature fusions with few parameters and high inference speed. Different from the filed receptive, enlarge approaches, such as the atrous spatial pyramid pooling (ASPP) module in DeepLabv3, will inevitably make the network heavy. The adopted lightweight Decoder is able to effectively capture context information without complexity. Although the UNet-based models have a simple structure and may achieve a high inference speed in a different test mode of MMsegmentation, the advantage

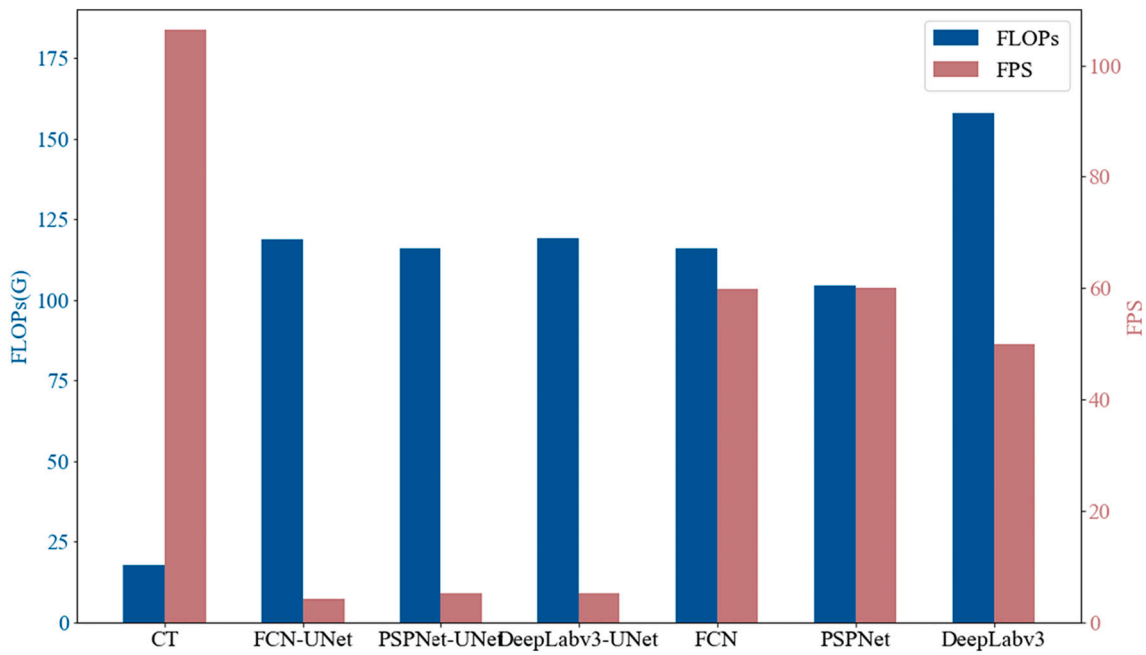

Fig. 10. Comparison of the computational efficiency of different models.

of skip connections cannot significantly improve efficiency due to its intrinsic limitations of kernel sizes.

The goal of this investigation is that the proposed model will be implemented into an edge-computing package integrated into a dedicated detection vehicle for crack detection in low-volume roadways. The detection vehicle will collect high-resolution pavement surface images, and the proposed model will automatically segment the pavement cracks and the background as the pavement images being collected. The proposed system could supplement other existing automatic detection systems by focusing on the problematic cracks under harsh environmental noises (e.g., heavy shadow or fallen leaves).

5. Conclusions

This study introduces a novel semantic segmentation framework named CT for better performance on pavement crack detection, especially in handling challenging images having shadows, dense cracks, and leaves. It has a superior capability in modeling long-range pavement crack pixels. A new public pavement crack image dataset named CrackSC, including 197 pavement crack images taken in South Carolina, USA, and the corresponding annotations, is released for free access. CT is based on the Encoder-Decoder system. In the design of the Encoder, we employ the Swin-Transformer as the Encoder. Along with the Transformer blocks, W-SMA, SW-SMA, the shifted window operation, etc., the hierarchical representation of features is established, better circulation with pavement crack features is achieved, and the computational complexity of the network is reduced.

Three pavement crack image datasets (i.e., CFD, Crack500, and CrackSC) are tested to verify the superior performance of CT. All image datasets contain two classes which are the background and the pavement crack, respectively. To fairly compare the detection performance of different models, the open-source semantic segmentation library MMSegmentation is adopted to train and test the models. Regarding the Encoders, ResNet50, UNet, and Swin-Transformer are adopted. FCN, DeepLabv3, PSPNet, and SegFormer are used as Decoders. The performance evaluation is composed of two parts which are the evaluation metrics (i.e., mF1 score, mPrecision, and mRecall) and the detection visualization. Based on the limited results of three image datasets, our proposed model achieves the best performance of crack detection under different conditions. From one perspective, CT can better retrieve the crack length and sense thin and shallow cracks than the other models compared. From another perspective, CT is able to ease the impact of heavy shadows or fallen leaves which are commonly seen in practice. To better serve the industry and the research community, more pavement crack image samples with or without heavy shadows would be collected and trained with our proposed model.

The future work will be focused on three parts as follows: (1) Although the proposed CT model can establish the cross window connection between different patches for long range pixel dependency modeling, there is still room to reduce the coupling effect of heavy noise and fallen leaves for better spatial feature fusion. (2) More data collected in the real world will be included in the future for a comprehensive investigation on different pavement surface distresses detection. (3) Compared to other lightweight models, CT has the potential for compression and acceleration for portable edge device application.

Based on these experiments and observations, the proposed model has the potential to be implemented in the pavement crack detection, and the mobile platform with the lightweight model will be developed in the next stage.

Declaration of Competing Interest

The authors declare that they have no known competing financial interests or personal relationships that could have appeared to influence the work reported in this paper.

Data availability

Data will be made available on request.

Acknowledgement

This research is partially funded by the National Academy of Sciences under the IDEA program and the faculty startup fund provided by the College of Engineering and Computing at the University of South Carolina. The opinions presented in this article solely reflect those of the authors and do not represent any opinions of the funding agencies.

References

[1] L. Sun, M. Kamaliardakani, Y. Zhang, Weighted neighborhood pixels segmentation method for automated detection of cracks on pavement surface images, J. Comput. Civ. Eng. 30 (2) (2016) 04015021, https://doi.org/10.1061/(asce)cp.1943-5487.0000488.

[2] H. Cheng, M. Miyojim, Novel system for automatic pavement distress detection, J. Comput. Civ. Eng. 12 (3) (1998) 145–152, https://doi.org/10.1061/(asce)0887-3801(1998)12:3(145).

[3] Y. Maode, B. Shaobo, X. Kun, H. Yuyao, Pavement crack detection and analysis for high-grade highway, in: 2007 8th International Conference on Electronic Measurement and Instruments, IEEE, 2007, pp. 4-548–4-552, https://doi.org/10.1109/icemi.2007.4351202.

[4] Z. Qingbo, Pavement crack detection algorithm based on image processing analysis, in: 2016 8th International Conference on Intelligent Human-Machine Systems and Cybernetics (IHMSC), IEEE, 2016, pp. 15–18, https://doi.org/10.1109/ihmsc.2016.96.

[5] Q. Zou, Y. Cao, Q. Li, Q. Mao, S. Wang, CrackTree: automatic crack detection from pavement images, Pattern Recogn. Lett. 33 (3) (2012) 227–238, https://doi.org/10.1016/j.patrec.2011.11.004.

[6] E. Zalama, J. Gómez-García-Bermejo, R. Medina, J. Llamas, Road crack detection using visual features extracted by Gabor filters, Computer-Aided Civil and Infrastructure Engineering 29 (5) (2014) 342–358, https://doi.org/10.1111/mice.12042.

[7] M. Salman, S. Mathavan, K. Kamal, M. Rahman, Pavement crack detection using the Gabor filter, in: 16th International IEEE Conference on Intelligent Transportation Systems (ITSC 2013), IEEE, 2013, pp. 2039–2044, https://doi.org/10.1109/itsc.2013.6728529.

[8] K. Zhang, H. Cheng, B. Zhang, Unified approach to pavement crack and sealed crack detection using preclassification based on transfer learning, J. Comput. Civ. Eng. 32 (2) (2018) 04018001, https://doi.org/10.1061/(asce)cp.1943-5487.0000736.

[9] F. Yang, L. Zhang, S. Yu, D. Prokhorov, X. Mei, H. Ling, Feature pyramid and hierarchical boosting network for pavement crack detection, IEEE Trans. Intell. Transp. Syst. 21 (4) (2019) 1525–1535, https://doi.org/10.1109/tits.2019.2910595.

[10] Y. Fei, K.C. Wang, A. Zhang, C. Chen, J.Q. Li, Y. Liu, G. Yang, B. Li, Pixel-level cracking detection on 3D asphalt pavement images through deep-learning-based CrackNet-V, IEEE Trans. Intell. Transp. Syst. 21 (1) (2019) 273–284, https://doi.org/10.1109/tits.2019.2891167.

[11] C. Shao, Y. Chen, F. Xu, S. Wang, A kind of pavement crack detection method based on digital image processing, in: 2019 IEEE 4th Advanced Information Technology, Electronic and Automation Control Conference (IAEAC), IEEE, 2019, pp. 397–401, https://doi.org/10.1109/iaeac47372.2019.8997810.

[12] C. Jiang, Y.J. Tsai, Enhanced crack segmentation algorithm using 3D pavement data, J. Comput. Civ. Eng. 30 (3) (2016) 04015050, https://doi.org/10.1061/(asce)cp.1943-5487.0000526.

[13] R. Fan, M.J. Bocus, Y. Zhu, J. Jiao, L. Wang, F. Ma, S. Cheng, M. Liu, Road crack detection using deep convolutional neural network and adaptive thresholding, in: 2019 IEEE Intelligent Vehicles Symposium (IV), IEEE, 2019, pp. 474–479, https://doi.org/10.1109/ivs.2019.8814000.

[14] A. Akagic, E. Buza, S. Omanovic, A. Karabegovic, Pavement crack detection using Otsu thresholding for image segmentation, in: 2018 41st International Convention on Information and Communication Technology, Electronics and Microelectronics (MIPRO), IEEE, 2018, pp. 1092–1097, https://doi.org/10.23919/mipro.2018.8400199.

[15] L. Peng, W. Chao, L. Shuangmiao, F. Baocai, Research on crack detection method of airport runway based on twice-threshold segmentation, in: 2015 Fifth International Conference on Instrumentation and Measurement, Computer, Communication and Control (IMCCC), IEEE, 2015, pp. 1716–1720, https://doi.org/10.1109/imccc.2015.364.

[16] S. Wang, W. Tang, Pavement crack segmentation algorithm based on local optimal threshold of cracks density distribution, in: International Conference on Intelligent Computing, Springer, 2011, pp. 298–302, https://doi.org/10.1007/978-3-642-24728-6_40.

[17] C. Chen, H. Seo, C. Jun, Y. Zhao, A potential crack region method to detect crack using image processing of multiple thresholding, signal, Image and Video Processing (2022) 1–9, https://doi.org/10.1007/s11760-021-02123-w.

[18] N. Safaei, O. Smadi, B. Safaei, A. Masoud, A Novel Adaptive Pixels Segmentation Algorithm for Pavement Crack Detection, 2021, https://doi.org/10.31124/advance.13601339.

[19] H. Zhao, G. Qin, X. Wang, Improvement of canny algorithm based on pavement edge detection, in: 2010 3rd International Congress on Image and Signal Processing, IEEE, 2010, pp. 964–967, https://doi.org/10.1109/cisp.2010.5646923.

[20] H. Nhat-Duc, Q.-L. Nguyen, V.-D. Tran, Automatic recognition of asphalt pavement cracks using metaheuristic optimized edge detection algorithms and convolution neural network, Autom. Constr. 94 (2018) 203–213, https://doi.org/10.1016/j.autcon.2018.07.008.

[21] A. Ayenu-Prah, N. Attoh-Okine, Evaluating pavement cracks with bidimensional empirical mode decomposition, EURASIP Journal on Advances in Signal Processing 2008 (2008) 1–7, https://doi.org/10.1155/2008/861701.

[22] A. Cuhadar, K. Shalaby, S. Tasdoken, Automatic segmentation of pavement condition data using wavelet transform, in: IEEE CCECE2002. Canadian Conference on Electrical and Computer Engineering. Conference Proceedings (Cat. No. 02CH37373), IEEE, 2002, pp. 1009–1014, https://doi.org/10.1109/ccece.2002.1013082.

[23] K.C. Wang, Q. Li, W. Gong, Wavelet-based pavement distress image edge detection with a trous algorithm, Transp. Res. Rec. 2024 (1) (2007) 73–81, https://doi.org/10.3141/2024-09.

[24] B. Li, K.C. Wang, A. Zhang, E. Yang, G. Wang, Automatic classification of pavement crack using deep convolutional neural network, International Journal of Pavement Engineering 21 (4) (2020) 457–463, https://doi.org/10.1080/10298436.2018.1485917.

[25] N. Yusof, M.K. Osman, Z. Hussain, M.H.M. Noor, A. Ibrahim, N. Tahir, N. Abidin, Automated asphalt pavement crack detection and classification using deep convolution neural network, in: 2019 9th IEEE International Conference on Control System, Computing and Engineering (ICCSCE), IEEE, 2019, pp. 215–220, https://doi.org/10.1109/iccsce47578.2019.9068551.

[26] W. Song, G. Jia, D. Jia, H. Zhu, Automatic pavement crack detection and classification using multiscale feature attention network, IEEE Access 7 (2019) 171001–171012, https://doi.org/10.1109/access.2019.2956191.

[27] W. Yu, T. Yang, C. Chen, Towards resolving the challenge of long-tail distribution in UAV images for object detection, in: Proceedings of the IEEE/CVF Winter Conference on Applications of Computer Vision, 2021, pp. 3258–3267, https://doi.org/10.1109/wacv48630.2021.00330.

[28] F. Guo, Z. Jiang, Y. Wang, C. Chen, Y. Qian, Dense traffic detection at highway-railroad grade crossings, IEEE Trans. Intell. Transp. Syst. (2022), https://doi.org/10.1109/tits.2022.3140948.

[29] X. Zhang, B. Story, D. Rajan, Night time vehicle detection and tracking by fusing vehicle parts from multiple cameras, IEEE Trans. Intell. Transp. Syst. (2021), https://doi.org/10.1109/tits.2021.3076406.

[30] D. Ma, H. Fang, N. Wang, B. Xue, J. Dong, F. Wang, A real-time crack detection algorithm for pavement based on CNN with multiple feature layers, Road Materials and Pavement Design (2021) 1–17, https://doi.org/10.1080/14680629.2021.1925578.

[31] M. Nie, C. Wang, Pavement Crack Detection based on yolo v3, in: 2019 2nd International Conference on Safety Produce Informatization (IICSPI), IEEE, 2019, pp. 327–330, https://doi.org/10.1109/iicspi48186.2019.9095956.

[32] X. Zhang, D. Rajan, B. Story, Concrete crack detection using context-aware deep semantic segmentation network, Computer-Aided Civil and Infrastructure Engineering 34 (11) (2019) 951–971, https://doi.org/10.1111/mice.12477.

[33] T. Chen, Z. Cai, X. Zhao, C. Chen, X. Liang, T. Zou, P. Wang, Pavement crack detection and recognition using the architecture of segNet, J. Ind. Inf. Integr. 18 (2020), 100144, https://doi.org/10.1016/j.jii.2020.100144.

[34] S.L. Lau, E.K. Chong, X. Yang, X. Wang, Automated pavement crack segmentation using u-net-based convolutional neural network, IEEE Access 8 (2020) 114892–114899, https://doi.org/10.1109/access.2020.3003638.

[35] A. Ji, X. Xue, Y. Wang, X. Luo, W. Xue, An integrated approach to automatic pixel-level crack detection and quantification of asphalt pavement, Autom. Constr. 114 (2020), 103176, https://doi.org/10.1016/j.autcon.2020.103176.

[36] Y. Shi, L. Cui, Z. Qi, F. Meng, Z. Chen, Automatic road crack detection using random structured forests, IEEE Trans. Intell. Transp. Syst. 17 (12) (2016) 3434–3445, https://doi.org/10.1109/tits.2016.2552248.

[37] MMSegmentation, MMSegmentation: Openmmlab Semantic Segmentation Toolbox and Benchmark. https://github.com/open-mmlab/mmsegmentation, 2020.

[38] J. Long, E. Shelhamer, T. Darrell, Fully convolutional networks for semantic segmentation, Proc. IEEE Conf. Comput. Vis. Pattern Recognit. (2015) 3431–3440, https://doi.org/10.1109/CVPR.2015.7298965.

[39] O. Ronneberger, P. Fischer, T. Brox, U-net: Convolutional networks for biomedical image segmentation, in: International Conference on Medical Image Computing and Computer-Assisted Intervention, Springer, 2015, pp. 234–241, https://doi.org/10.48550/arXiv.1505.04597.

[40] L.C. Chen, G. Papandreou, F. Schroff, H. Adam, Rethinking atrous convolution for semantic image segmentation, arXiv (2017), https://doi.org/10.48550/arXiv.1706.05587 preprint arXiv:1706.05587.

[41] H. Zhao, J. Shi, X. Qi, X. Wang, J. Jia, Pyramid scene parsing network, Proc. IEEE Conf. Comput. Vis. Pattern Recognit. (2017) 2881–2890, https://doi.org/10.1109/CVPR.2017.660.

[42] W. Liu, Y. Huang, Y. Li, Q. Chen, FPCNet: Fast pavement crack detection network based on encoder-decoder architecture, arXiv (2019), https://doi.org/10.48550/arXiv.1907.02248 preprint arXiv:1907.02248.

[43] Z. Fan, Y. Wu, J. Lu, W. Li, Automatic pavement crack detection based on structured prediction with the convolutional neural network, arXiv (2018), https://doi.org/10.48550/arXiv.1802.02208 preprint arXiv:1802.02208.

[44] Z. Qu, C. Cao, L. Liu, D.Y. Zhou, A deeply supervised convolutional neural network for pavement crack detection with multiscale feature fusion, in: IEEE Transactions on Neural Networks and Learning Systems, 2021, https://doi.org/10.1109/TNNLS.2021.3062070.

[45] Y. Tang, A.A. Zhang, L. Luo, G. Wang, E. Yang, Pixel-level pavement crack segmentation with encoder-decoder network, Measurement 184 (2021), 109914, https://doi.org/10.1016/j.measurement.2021.109914.