2025 IEEE 8th Advanced Information Technology, Electronic and Automation Control Conference (IAEAC) | 979-8-3315-0951-4/25/$31.00 ©2025 IEEE | DOI: 10.1109/IAEAC65194.2025.11166504

C-YOLO: An Attention-Enhanced Framework for Road Crack Detection

Xinyu Du [1]
1. College of Intelligence and Computing, Tianjin University, Tianjin, China
Corresponding author: Xinyu Du (3023244240@tju.edu.cn)

***Abstract*—Timely and accurate detection of road surface cracks is essential for infrastructure maintenance and traffic safety. Yet, many existing detection algorithms struggle to effectively capture cracks of varying scales and shapes, especially when faced with complex textures and noise from real-world road scenes. To overcome these challenges, this study presents an enhanced detection framework, termed C-YOLO, which is specifically optimized for crack identification. The model incorporates a bidirectional feature pyramid network (BiFPN) to strengthen the aggregation of features across different resolutions, addressing the shortcomings of earlier models in multi-level feature representation. To improve the model's sensitivity to subtle crack features, particularly under poor lighting or interference, an Efficient Channel Attention (ECA) mechanism is embedded to emphasize key feature channels. Furthermore, a Convolutional Block Attention Module (CBAM) is applied to refine both spatial and channel-wise focus, thereby enhancing the network's ability to differentiate fine cracks from background textures. Experimental evaluations indicate that C-YOLO outperforms the baseline by 4.6% in mAP, confirming its effectiveness in detecting cracks under diverse and challenging conditions.**

Keywords—ECA;YOLO; BiFPN; Road crack detection

I. INTRODUCTION

Roads are a fundamental component of transportation infrastructure, and their safety directly impacts public well-being and socio-economic stability. However, road surfaces frequently suffer from damage such as cracks due to heavy traffic loads, harsh environmental conditions, and aging of construction materials. If these cracks are not detected and repaired promptly, they can expand and cause structural failures, greatly shortening the road's lifespan and posing risks to traffic safety. Traditional methods of road crack inspection mainly rely on manual inspection, which is inefficient, costly, subjective, and prone to oversight, failing to meet the growing demands for intelligent maintenance of modern transportation networks.

In recent years, advances in deep learning and computer vision technologies have sparked increased interest in the automated detection of road cracks. Prominent object detection frameworks, including YOLO series, SSD, and Faster R-CNN, have been progressively applied in detecting road surface defects, demonstrating promising results. Substantial progress has been made in automated pavement crack detection through the application of computer vision and deep learning techniques. Zhang et al. [1] first demonstrated that convolutional neural networks (CNNs) could be effectively employed to identify cracks in road surfaces, offering improved robustness under challenging illumination conditions. Building on this foundation, Oliveira and Correia [2] developed a framework that not only detects cracks but also quantifies their morphological characteristics, providing valuable insights for maintenance planning. Gavilán et al. [3] introduced a method that integrates pavement type classification to adaptively enhance crack detection performance across diverse road textures. Mandal et al. [4] further advanced deep learning applications by training a CNN on large-scale datasets, resulting in more accurate localization of complex crack patterns. More recently, Du et al. [5] proposed the LEE-YOLO framework, which combines lightweight object detection networks with UAV-based image acquisition in a cyber-physical architecture, enabling real-time, high-precision monitoring of pavement conditions. Collectively, these studies reflect a clear evolution from conventional image-based detection approaches to intelligent, scalable systems capable of supporting large-scale road infrastructure management.

However, due to the elongated shape, variable morphology, and complex textures of cracks—as well as significant interference from background noise—many existing detection algorithms continue to struggle with low accuracy, inconsistent performance across different crack scales, and frequent false positives. These challenges highlight the urgent need for more efficient and robust crack detection methods capable of handling real-world road conditions with higher precision.

In response to the limitations of current road crack detection methods—particularly in handling scale diversity, background interference, and irregular crack morphology—this study introduces a novel and high-performance algorithm named C-YOLO. A weighted bidirectional feature pyramid network (BiFPN) is employed to facilitate the fusion of multi-scale features, enabling the model to capture both coarse and fine crack structures with improved semantic consistency while maintaining computational efficiency. To further strengthen the model's sensitivity to subtle crack patterns, especially in low-contrast or noisy environments, an Efficient Channel Attention (ECA) mechanism is integrated, allowing the network to selectively emphasize informative feature channels. In addition, the

Authorized licensed use limited to: Civil Aviation University of China. Downloaded on December 18,2025 at 13:03:04 UTC from IEEE Xplore. Restrictions apply.

Convolutional Block Attention Module (CBAM) is incorporated to refine spatial and channel attention, improving the model's ability to localize and distinguish fine crack details from complex pavement textures. Together, these components form a cohesive architecture tailored for robust and accurate crack detection in real-world scenarios.

II. YOLOV11

In the context of road infrastructure maintenance, the accurate and efficient detection of pavement cracks is essential. Among existing object detection frameworks, YOLOv11 has emerged as a state-of-the-art algorithm due to its balance between speed and accuracy. Its lightweight variant, YOLOv11n, is particularly well-suited for real-time crack detection tasks, especially when deployed in resource-constrained environments. This study leverages the YOLOv11n architecture to explore its suitability for road crack detection and to evaluate its architectural components in detail [6]-[8].

As shown in Fig. 1, the YOLOv11n framework is composed of four key modules: **Input**, **Backbone**, **Neck**, and **Head**. The **Input** module is responsible for preparing pavement images to meet network requirements, including operations such as resizing, normalization, and data augmentation (e.g., rotation, cropping, flipping), which enhance the model's generalization to diverse crack patterns and surface conditions [9].

The Backbone incorporates an improved CSP-Darknet53 structure, consisting of five convolutional layers, two C2f modules, and a spatial pyramid pooling-fast (SPPF) block. The initial 3×3 convolution applies a 4× downsampling, significantly reducing computational cost while retaining essential crack features. The SPPF module further supports multi-scale feature extraction by combining serial and parallel pooling operations [10].

In the Neck stage, a PAN-FPN structure is utilized to facilitate feature fusion across different scales. Through both downsampling and upsampling pathways, this module strengthens the interaction between high-level semantic and low-level spatial features, which is crucial for identifying cracks of varying sizes and complexities. Finally, the Head adopts a decoupled design that separates classification and regression branches. It uses anchor-free mechanisms with DFL-based regression to enhance localization accuracy and prediction consistency. Each detection layer independently processes specific scales, allowing for precise and efficient crack boundary estimation.

III. OPTIMIZING YOLOv11

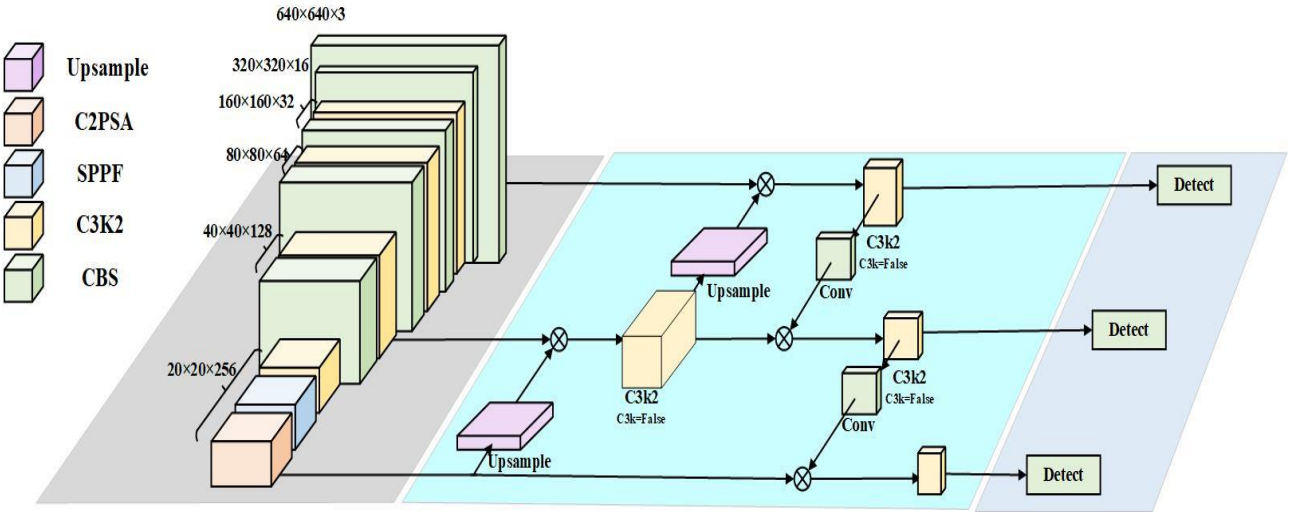

Fig. 1. Chart of YOLOv11

A. BiFPN Network

In practical applications of road crack detection, cracks often present a wide range of scales, irregular morphologies, and varying degrees of visibility. They may be partially covered by road markings, stains, or surface textures, which introduces substantial challenges for reliable detection. Accurately identifying cracks across different sizes—especially thin or fragmented ones—requires an effective fusion of multi-scale features and the suppression of irrelevant background interference. While the standard YOLOv11 framework adopts Feature Pyramid Networks (FPN) and Path Aggregation Networks (PAN) for multi-level feature fusion, these components have notable limitations. The repeated up-sampling and down-sampling processes often lead to the loss of fine spatial details, and the reuse of shallow features remains insufficient. Moreover, the need for continuous feature propagation across scales increases the computational load significantly.

To overcome these issues, this study integrates a Weighted Bidirectional Feature Pyramid Network (BiFPN) into the detection framework. The BiFPN introduces two-way information pathways that improve feature flow between layers of different resolutions, enhancing the model's ability to represent cracks with

Authorized licensed use limited to: Civil Aviation University of China. Downloaded on December 18,2025 at 13:03:04 UTC from IEEE Xplore. Restrictions apply.

diverse widths and structures. More importantly, it incorporates a learnable weighting mechanism, enabling the network to adaptively fuse features by emphasizing more informative layers and reducing the impact of less relevant ones [11].

To simplify the architecture and improve fusion efficiency, BiFPN removes redundant unidirectional connections and establishes shortcut links between corresponding input and output nodes. This design strengthens the reuse of key feature maps and helps preserve spatial structure, which is critical for detecting narrow or subtle cracks. Through iterative fusion and refinement, the network progressively enhances its feature representations, resulting in improved semantic depth and greater discriminative capacity.

Unlike traditional approaches that simply stack or average features, BiFPN's adaptive fusion method considers both the resolution and semantic weight of each layer, allowing for more targeted and context-aware feature integration. In this study, the BiFPN_Concat2 module is embedded within the YOLOv11 architecture to reinforce multi-scale feature communication. By combining dynamic weighting with efficient shortcut paths, the module effectively improves detection accuracy for both fine and large cracks without introducing excessive computational complexity.

B. *Improvement of ECA*

In the task of road crack detection, the presence of complex pavement textures, surface noise, and background clutter often interferes with the accurate identification of fine crack features. These conditions pose particular challenges when the cracks are narrow, faint, or partially occluded by surface artifacts. To address these issues, an attention mechanism is introduced to guide the network's focus toward the most informative regions of the input image. By enhancing the model's ability to selectively attend to relevant features, this approach significantly improves detection performance under challenging real-world conditions.

To further strengthen the model's feature extraction capability—particularly across multiple scales—this work integrates the Efficient Channel Attention (ECA) mechanism into the backbone. Unlike traditional attention modules that rely on fully connected layers and dimension reduction, ECA employs a more efficient one-dimensional convolution. The kernel size of this convolution is adaptively determined by the total number of channels (**C**), allowing the model to capture localized inter-channel dependencies without introducing unnecessary complexity.

Rather than compressing the feature space, the ECA module first applies global average pooling, followed by a 1D convolution with kernel size **k** to model the interaction between each channel and its neighboring channels. The parameter **k** is not fixed but dynamically adjusted based on the input dimension, ensuring that attention weights reflect the appropriate level of local dependency. This design enables the network to maintain rich semantic representations while efficiently highlighting features critical to detecting cracks of varying widths, orientations, and intensities.

C. *Convolutional Block Attention Module*

Accurately detecting pavement cracks in real-world conditions remains difficult, particularly when cracks are narrow, partially obscured, or embedded within complex surface textures. To improve the model's ability to focus on relevant features while suppressing background noise, this study integrates the Convolutional Block Attention Module (CBAM) [13] into the detection network.

CBAM operates through two sequential attention mechanisms: channel attention and spatial attention. In the first stage, the Channel Attention Module (CAM) enhances the network's sensitivity to informative feature channels. It does so by applying both global max pooling and global average pooling across the spatial dimensions of the input feature map. The pooled results are separately processed through shared multilayer perceptrons (MLPs), then combined and passed through a sigmoid activation function to generate a channel attention map. This map highlights channel-wise features that are most relevant to crack representation. This mechanism is mathematically described in Equations (1) and (2).

$$F' = M_C(F) \otimes F \tag{1}$$

$$F'' = M_S\left(F'\right) \otimes F' \tag{2}$$

Where, F' and F'' represent characterization maps of the different phases.

IV. RESULTS AND ANALYSIS

A. *Datasets and evaluation indicators*

To facilitate accurate and timely detection of road surface cracks, this study constructed a specialized dataset comprising 4,000 pavement images collected through multiple sources, including web-crawling techniques and publicly available image repositories. All images were manually annotated using the LabelImg tool, and the corresponding bounding box labels were saved in .txt format to align with YOLO-compatible training requirements. For experimental purposes, the dataset was randomly divided into training, validation, and test sets in an 8:1:1 ratio to ensure balanced evaluation and prevent overfitting.

To assess the performance of the proposed crack detection model, five standard evaluation metrics were employed: Precision, Recall, F1-score, Average Precision (AP), and Mean Average Precision (mAP). The mathematical definitions of these metrics are presented in Equations (3) to (7). Precision measures the proportion of correctly predicted crack instances among all positive detections, while Recall reflects the ability of the model to detect actual cracks. The F1-score, defined as the

Authorized licensed use limited to: Civil Aviation University of China. Downloaded on December 18,2025 at 13:03:04 UTC from IEEE Xplore. Restrictions apply.

harmonic mean of Precision and Recall, offers a balanced view of model performance. Average Precision evaluates the precision-recall trade-off for a specific class, and Mean Average Precision aggregates AP across all classes, providing a comprehensive indicator of overall detection accuracy across the entire dataset.

$$Precision = \frac{TP}{TP + FP} \tag{3}$$

$$Recall = \frac{TP}{TP + FN} \tag{4}$$

$$AP = \int_0^1 P(R)dR \tag{5}$$

$$mAP = \frac{\sum_{q=1}^{Q} AP(q)}{N} \tag{6}$$

$$F1 = \frac{2 \times precision \times recall}{precision + recall} \tag{7}$$

B. Optimization results before and after

To assess the effectiveness of the proposed C-YOLO model in detecting pavement cracks, we conducted a comparative evaluation against the baseline YOLOv11 using four standard metrics: Precision, Recall, F1-score, and mean Average Precision (mAP). As summarized in Table I, C-YOLO demonstrates consistent and notable improvements across all evaluation indicators.

TABLE I. OPTIMIZATION RESULTS

Model	Precision (%)	Recall (%)	F1(%)	mAP*(%)*
YOLOv11	90.4	85.0	87.6	89.0
C-YOLO	92.0	88.9	90.4	93.6

The results indicate substantial gains across all evaluation metrics. Specifically, C-YOLO achieved a precision of 92.0%, outperforming YOLOv11's 88.4% by 3.6 percentage points, which reflects the model's improved ability to reduce false positives in smoking detection scenarios.

In terms of Precision, C-YOLO achieves 92.0%, slightly higher than the 90.4% recorded by YOLOv11, indicating a stronger ability to minimize false positives and distinguish true crack regions from background textures. The Recall also shows a considerable increase from 85.0% to 88.9%, suggesting that C-YOLO is more capable of identifying subtle or partially obscured cracks. This improvement is particularly important in real-world road conditions where cracks often appear fragmented or embedded in noisy surfaces. The overall balance between Precision and Recall is reflected in the F1-score, which improves from 87.6% to 90.4%, confirming a more reliable and stable detection performance.

The mAP value—representing the model's average detection accuracy across all test cases—rises significantly from 89.0% to 93.6%. This 4.6% improvement highlights the model's enhanced generalization capability across varying crack types, scales, and surface conditions. These performance gains are primarily attributed to the integration of the BiFPN module, which facilitates more effective multi-scale feature aggregation; the ECA attention mechanism, which improves channel-level discrimination; and the CBAM module, which further refines spatial and channel focus. Together, these enhancements enable C-YOLO to better capture crack-related features while reducing interference from complex pavement textures.

C. Ablation Experiment

To systematically evaluate the contribution of each structural enhancement, we conducted a stepwise comparison across four models: the baseline YOLOv11, its BiFPN-enhanced variant, an extended version incorporating ECA, and the complete C-YOLO model. The results, summarized in Table II.

TABLE II. ABLATION RESULTS

Model	Precision (%)	Recall (%)	F1(%)	mAP (%)
YOLOv11	90.4	85.0	87.6	89.0
YOLOv11-BiFPN	91.2	86.3	88.7	90.3
YOLOv11-BiFPN-ECA	91.8	87.5	89.6	92.5
C-YOLO	92.0	88.9	90.4	93.6

Introducing BiFPN into YOLOv11 led to a clear improvement in feature fusion across scales. Compared to the baseline, Precision increased from 90.4% to 91.2%, while Recall improved from 85.0% to 86.3%. This resulted in a higher F1-score of 88.7%, reflecting more stable detection of cracks with varying widths and visibility. The mAP also rose to 90.3%, indicating better overall detection accuracy.

Building on this, the addition of the Efficient Channel Attention (ECA) mechanism further strengthened the model's ability to emphasize relevant channel features while filtering out background interference. Precision and Recall rose to 91.8% and 87.5%, respectively, with the F1-score reaching 89.6% and mAP improving to 92.5%. These gains suggest that ECA enhances the model's sensitivity to subtle or fragmented crack patterns without increasing computational burden.

The full C-YOLO model, which integrates both ECA and the Convolutional Block Attention Module (CBAM), achieved the best performance among all configurations. It recorded a Precision of 92.0%, Recall of 88.9%, F1-score of 90.4%, and mAP of 93.6%. The inclusion of CBAM enables more refined spatial and channel-wise attention, further improving the model's ability to distinguish cracks from complex pavement textures.

Authorized licensed use limited to: Civil Aviation University of China. Downloaded on December 18,2025 at 13:03:04 UTC from IEEE Xplore. Restrictions apply.

Fig. 2. Actual test results

D. Comparative experiments with other algorithms

To evaluate the effectiveness of the proposed C-YOLO model, we conducted a performance comparison with YOLOv6 and YOLOv7, two widely adopted object detection frameworks. As summarized in Table III, C-YOLO consistently outperformed both baselines across all evaluation metrics.

TABLE III. COMPARATIVE EXPERIMENTS RESULTS

Model	Precision (%)	Recall (%)	F1(%)	mAP (%)
YOLOv6	86.9	81.2	84.0	86.0
YOLOv7	87.5	83.6	85.5	87.1
C-YOLO	92.0	88.9	90.4	93.6

YOLOv6 achieved an F1-score of 84.0% and a mAP of 86.0%, while YOLOv7 improved slightly, with an F1-score of 85.5% and mAP of 87.1%. Despite architectural refinements in YOLOv7, both models showed limited effectiveness in identifying fine or irregular cracks, particularly under noisy surface conditions.

C-YOLO delivered a clear performance advantage, reaching a Precision of 92.0%, Recall of 88.9%, F1-score of 90.4%, and mAP of 93.6%. These gains reflect the combined effect of BiFPN, ECA, and CBAM, which together enhance the model's ability to integrate multi-scale features, focus on informative regions, and suppress background interference.

This comparison demonstrates that C-YOLO offers greater accuracy and robustness in detecting road cracks of varying sizes and complexities, making it better suited for real-world deployment in pavement inspection tasks.

These results collectively highlight that C-YOLO offers a substantial performance upgrade over existing models, making it particularly well-suited for real-time smoking behavior detection in challenging environments.

.

V. CONCLUSION

This study presents C-YOLO, a crack detection model designed to enhance accuracy under complex road conditions. By integrating BiFPN, the model effectively captures multi-scale features, while the ECA and CBAM modules improve channel sensitivity and spatial focus, respectively, leading to more precise identification of fine and irregular cracks. Although these enhancements improve detection performance, they also increase computational overhead. Future work will focus on streamlining the model to achieve a better trade-off between accuracy and efficiency, with the goal of enabling real-time deployment in practical road maintenance scenarios.

REFERENCES

[1] L. Zhang, F. Yang, Y. D. Zhang, and Y. J. Zhu, "Road crack detection using deep convolutional neural network," in *Proc. IEEE Int. Conf. Image Process. (ICIP)*, Phoenix, AZ, USA, Sep. 2016, pp. 3708–3712.

[2] H. Oliveira and P. L. Correia, "Automatic road crack detection and characterization," *IEEE Trans. Intell. Transp. Syst.*, vol. 14, no. 1, pp. 155–168, Mar. 2013.

[3] M. Gavilán, D. Balcones, O. Marcos, I. Parra, F. Rodríguez, and T. Llorca, "Adaptive road crack detection system by pavement classification," *Sensors*, vol. 11, no. 10, pp. 9628–9657, Oct. 2011.

[4] V. Mandal, L. Uong, and Y. Adu-Gyamfi, "Automated road crack detection using deep convolutional neural networks," in *Proc. IEEE Int. Conf. Big Data*, Seattle, WA, USA, Dec. 2018, pp. 5212–5215.

[5] Y. Du, Q. Cheng, X. Liu, J. Xu, and Y. Yi, "Enhancing road maintenance through cyber-physical integration: The LEE-YOLO model for drone-assisted pavement crack detection," *IEEE Trans. Intell. Transp. Syst.*, pp. 1–10, 2025, doi: 10.1109/TITS.2025.3540909.

[6] Y. Du, H. Du, Y. Jin, and Y. Yi, "A visual recognition method for the automatic detection of distracted driving behavior based on an attention mechanism," in *2023 IEEE 7th Information Technology and Mechatronics Engineering Conference (ITOEC)*, Chongqing, China: IEEE, Sep. 2023, pp. 811–815. doi: 10.1109/ITOEC57671.2023.10291763.

[7] Y. Du, X. Xu, and X. He, "Optimizing Geo-Hazard Response: LBE-YOLO's Innovative Lightweight Framework for Enhanced Real-Time Landslide Detection and Risk Mitigation," *Remote Sensing*, vol. 16, no. 3, p. 534, Jan. 2024, doi: 10.3390/rs16030534.

[8] Y. Du, X. Liu, Y. Yi, and K. Wei, "Optimizing Road Safety: Advancements in Lightweight YOLOv11 Models and GhostC2f Design for Real-Time Distracted Driving Detection," *Sensors*, vol. 23, no. 21, p. 8844, Oct. 2023, doi: 10.3390/s23218844.

[9] Y. Du, X. Liu, Y. Yi, and K. Wei, "Incorporating bidirectional feature pyramid network and lightweight network: a YOLOv5-GBC distracted driving behavior detection model," *Neural Comput & Applic*, Oct. 2023, doi: 10.1007/s00521-023-09043-5.

[10] Y. Du, Y. Yi, H. Guo, and X. Tian, "Vehicle detection in UAV traffic videos using GAN online augmentation: a transfer learning approach," in *Third International Conference on Computer Vision and Data Mining (ICCVDM 2022)*, T. Zhang and T. Yang, Eds., Hulun Buir, China: SPIE, Feb. 2023, p. 30. doi: 10.1117/12.2660020.

[11] M. Tan, R. Pang, and Q. V. Le, "EfficientDet: Scalable and Efficient Object Detection," in *2020 IEEE/CVF Conference on Computer Vision and Pattern Recognition (CVPR)*, 2020.

Authorized licensed use limited to: Civil Aviation University of China. Downloaded on December 18,2025 at 13:03:04 UTC from IEEE Xplore. Restrictions apply.

Accessed: May 22, 2023. [Online]. Available: https://xueshu.baidu.com/usercenter/paper/show?paperid=1s090840p7710rm09u3f0p40k5741040&site=xueshu_se

[12] Q. Wang, B. Wu, P. Zhu, P. Li, W. Zuo, and Q. Hu, "ECA-Net: Efficient Channel Attention for Deep Convolutional Neural Networks," 2019, doi: 10.48550/ARXIV.1910.03151.

[13] S. Woo, J. Park, J. Y. Lee, and I. S. Kweon, "CBAM: Convolutional Block Attention Module," *Springer, Cham*, 2018, doi: 10.1007/978-3-030-01234-2_1.

Authorized licensed use limited to: Civil Aviation University of China. Downloaded on December 18,2025 at 13:03:04 UTC from IEEE Xplore. Restrictions apply.