CR-1 : @KAA26800ACP_LIB.KAA26800ACP_LIB(SCH_1):PAGE1

A3

NOTES:

1. FOR LATEST CN, ASSEMBLY REVISION DATE, INDIVIDUAL FILE REVISION DATES AND DESCRIPTION FOR ALL FILES ATTACHED TO THE KAA26800ACP DATA MANAGEMENT SYSTEM RECORD, SEE CONTROL DOCUMENT, FILE KAA26800ACP_CDOC.DOC.
2. REFER TO THE FOLLOWING TABLE FOR A LIST OF FILES DESCRIBING THIS PCB ASSEMBLY

FILE	DESCRIPTION
KAA26800ACP_CDOC.DOC	CONTROL DOCUMENT (CDOC)
KAA26800ACP_BOM.XLS	BILL OF MATERIALS (BOM)
KAA26800ACP_SCH.PDF	SCHEMATIC (SCH) [THIS FILE]
KAA26800ACP_ASSY.PDF	MECHANICAL ASSEMBLY DRAWING (ASSY)

TABLE OF CONTENTS

SHEET NO.	SHEET NAME
1	TABLE OF CONTENTS
2	ARRANGEMENT TABLE
3	GDCB2 INTERFACE CONNECTION
4	AC LINE SENSING HIGH VOLTAGE
5	AC LINE SENSING SMPS & REFERENCES
6	AC LINE SENSING ISOLATION & LOW VOLTAGE
7	DC BUS TERMINALS AND SENSING
8	DC BUS SENSING ISOLATION CIRCUIT
9	DC BUS DISCHARGING CIRCUIT
10	CONVERTER CURRENT SENSORS
11	INVERTER CURRENT SENSORS
12	CONVERTER CURRENT SENSING CIRCUIT
13	INVERTER CURRENT SENSING CIRCUIT
14	MX & PX RELAYS
15	MX & PX RELAY CONTROL CIRCUITS
16	LINE REACTOR THERMAL SWITCH CIRCUIT
17	FAN CONTROL CIRCUIT
18	GATE DRIVE UVLO DETECTION LOGIC
19	OVER CURRENT & OUTPUT ENABLE LOGIC
20	SAFETY RELAY CIRCUIT
21	SAFETY RELAY MONITORING CIRCUIT
22	PWM SIGNAL BUFFER OF INVERTER
23	PWM SIGNAL MONITORING CIRCUIT
24	POWER SUPPLY INPUT CIRCUIT
25	MAIN SMPS
26	MAIN SMPS SECONDARY SIDE
27	CONVERTER GATE DRIVER (R-PHASE)

TABLE OF CONTENTS

SHEET NO.	SHEET NAME
28	CONVERTER GATE DRIVER (S-PHASE)
29	CONVERTER GATE DRIVER (T-PHASE)
30	INVERTER GATE DRIVER (U-PHASE)
31	INVERTER GATE DRIVER (V-PHASE)
32	INVERTER GATE DRIVER (W-PHASE)
33	GATE 30V INPUT SMPS
34	GATE SUPPLY OF INVERTER
35	GATE SUPPLY OF CONVERTER
36	CONVERTER IGBT MODULES
37	INVERTER IGBT MODULES
38	IGBT TEMP SENSING & ISOLATION
39	EEPROM
40	CNV_HW_OC
41	INV_HW_OC
42	Basenet Report, 1 OF 2
43	Basenet Report, 2 OF 2
44	CREF PART, 1 OF 6
45	CREF PART, 2 OF 6
46	CREF PART, 3 OF 6
47	CREF PART, 4 OF 6
48	CREF PART, 5 OF 6
49	CREF PART, 6 OF 6
50	page50
51	page51
52	page52
53	page53
54	page54

WARNING

THIS WORK AND THE INFORMATION IT CONTAINS ARE THE PROPERTY OF OTIS ELEVATOR COMPANY (OTIS). IT IS DELIVERED TO OTHERS ON THE EXPRESS CONDITION THAT IT WILL BE USED ONLY FOR, OR ON BEHALF OF, OTIS; THAT NEITHER IT NOR THE INFORMATION IT CONTAINS WILL BE REPRODUCED OR DISCLOSED, IN WHOLE OR IN PART, WITHOUT THE PRIOR WRITTEN CONSENT OF OTIS; AND THAT ON DEMAND IT AND ANY COPIES WILL BE PROMPTLY RETURNED TO OTIS.

UNPUBLISHED WORK © OTIS ELEVATOR COMPANY

ALL RIGHTS RESERVED.

DWG KAA26800ACP

OTIS ENGINEERING CENTER

CHANGWON, KOREA

CHANGES

2017-08-21 REVISED. SEE KAA26800ACP_CDOC.DOC FOR DETAILS (CN1037523) MILLETT S / MAGDA RF

OTIS United Technologies

HVPB
(High Voltage Power Board)
OVFR03A-406

DRAWN	S. MILLETT	ORIGINAL DATE	2017-01-06
CHK	W. HUANG		
APPD	R. MAGDA	SHEETS	55
AUTH	CN897873	SHEET	1

DRAFTED IN ACCORDANCE WITH OTIS DOCUMENT 52847

CR-2 : @KAA26800ACP_LIB.KAA26800ACP_LIB(SCH_1):PAGE2

A3

ARRANGEMENT TABLE

ARRANGEMENT	ACP1 (CHINA/PAA)	ACP2 (NSAA)	ACP3 (EUROPE)	ACP4 (EUROPE)
SFC	110VAC	110VAC	48VDC	110VAC
SAFETY DEVICE	PWM BUFFER + SW CONTACTOR	PWM BUFFER + 1 GATE DRIVE SAFETY RELAYS	PWM BUFFER + 2 GATE DRIVE SAFETY RELAYS	PWM BUFFER + 2 GATE DRIVE SAFETY RELAYS
CONVERTER CURRENT SENSORS	2 SENSORS	2 SENSORS	2 SENSORS	2 SENSORS
DC LINK POWER TERMINAL BLOCK	NOT INCLUDED	NOT INCLUDED	INCLUDED	INCLUDED
ASSEMBLY SECTION	ASSEMBLY_SEC1	ASSEMBLY_SEC2	ASSEMBLY_SEC3	ASSEMBLY_SEC4

WARNING

THIS WORK AND THE INFORMATION IT CONTAINS ARE THE PROPERTY OF OTIS ELEVATOR COMPANY (OTIS). **IT IS DELIVERED** TO OTHERS ON THE EXPRESS CONDITION THAT IT WILL BE USED ONLY FOR, OR ON BEHALF OF, OTIS; THAT NEITHER IT NOR THE INFORMATION IT CONTAINS WILL BE REPRODUCED OR DISCLOSED, IN WHOLE OR IN PART, WITHOUT THE PRIOR WRITTEN CONSENT OF OTIS; AND THAT ON DEMAND IT AND ANY COPIES WILL BE PROMPTLY RETURNED TO OTIS.

UNPUBLISHED WORK © OTIS ELEVATOR COMPANY
ALL RIGHTS RESERVED.

DWG KAA26800ACP

OTIS ENGINEERING CENTER
CHANGWON, KOREA

CHANGES

2017-08-21 REVISED. SEE KAA26800ACP_CDOC.DOC FOR DETAILS (CN1037523) MILLETT S / MAGDA RF

OTIS
United Technologies

HVPB
(High Voltage Power Board)
OVFR03A-406

		ORIGINAL DATE
DRAWN	S. MILLETT	2017-01-06
CHK	W. HUANG	
APPD	R. MAGDA	SHEETS
AUTH	CN897873	SHEET 2

DRAFTED IN ACCORDANCE WITH OTIS DOCUMENT 52847

CR-3 : @KAA26800ACP_LIB.KAA26800ACP_LIB(SCH_1):PAGE3

A3

GDCB2 INTERFACE CONNECTION

ROOM=INT_CONN

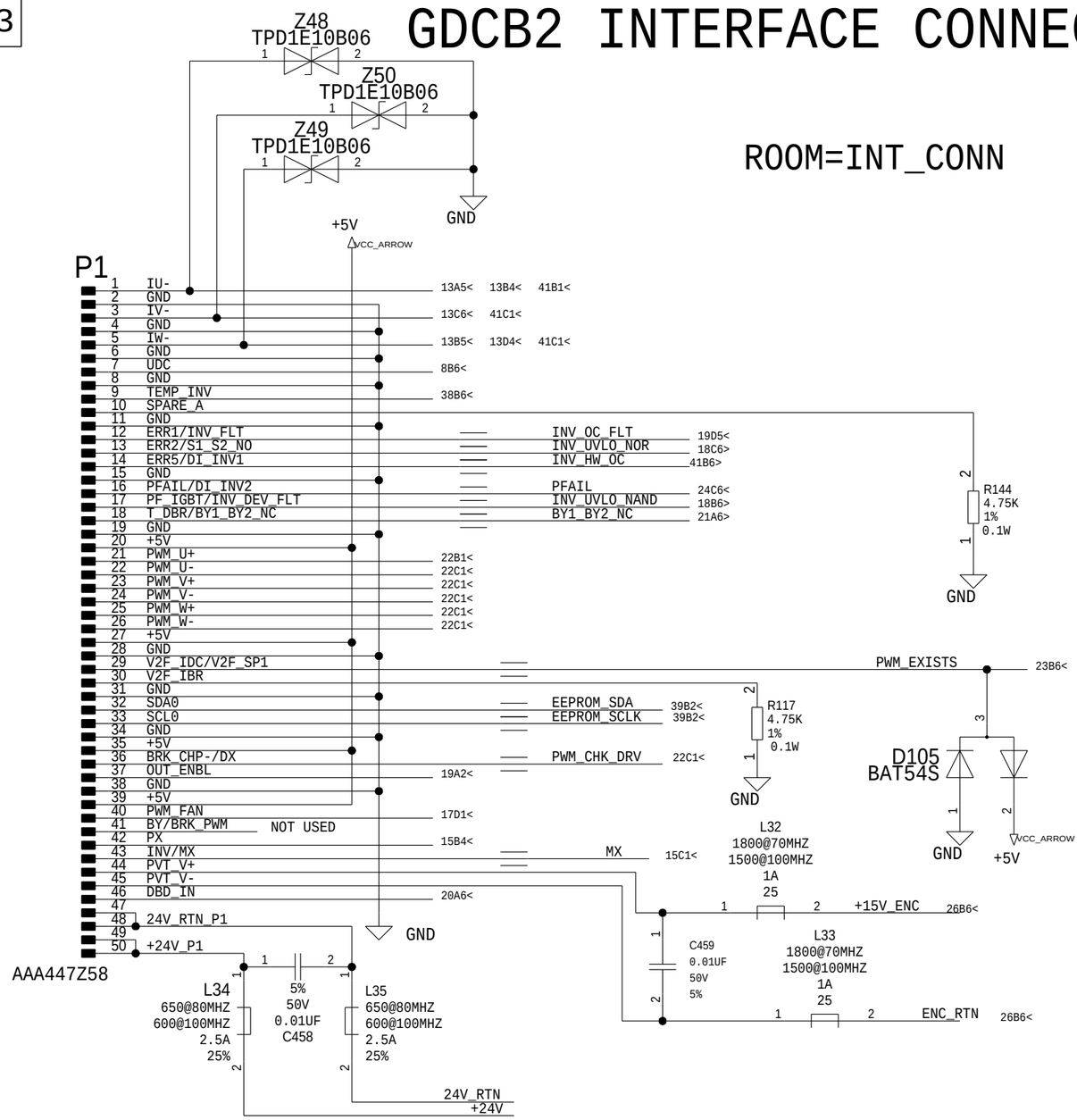

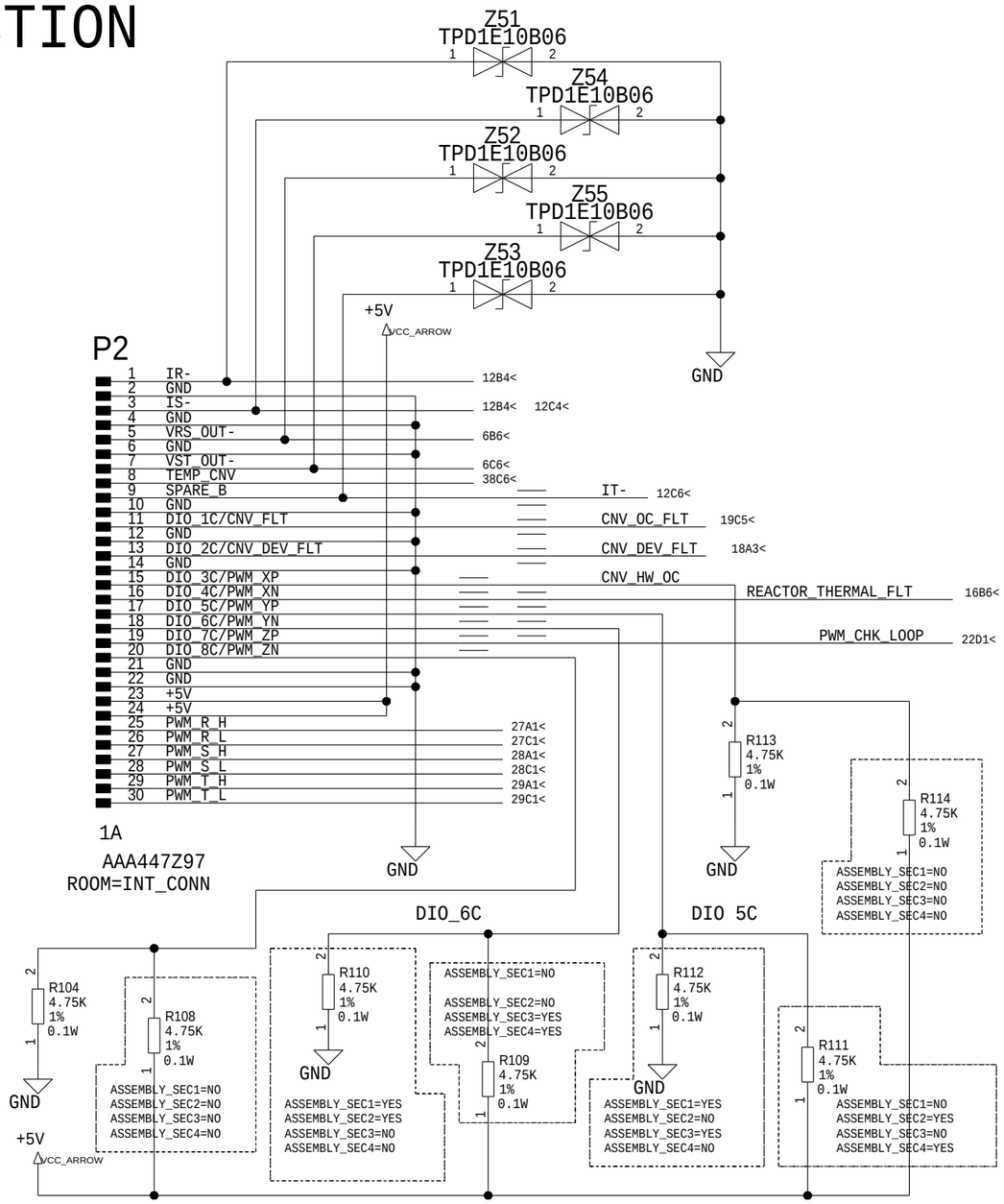

ROOM=INT_CONN
ROOM=INT_CONN
ROOM=INT_CONN
ROOM=INT_CONN
ROOM=INT_CONN
ROOM=INT_CONN
ROOM=INT_CONN
ROOM=INT_CONN
ROOM=INT_CONN
ROOM=INT_CONN
ROOM=INT_CONN
ROOM=INT_CONN

P2 CONN	ACP1 (CHINA/PAA)	ACP2 (NSAA)	ACP3 (EUROPE)	ACP4 (EUROPE)
DIO_5C	LOW	HIGH	LOW	HIGH
DIO_6C	LOW	HIGH	HIGH	HIGH

WARNING

THIS WORK AND THE INFORMATION IT CONTAINS ARE THE PROPERTY OF OTIS ELEVATOR COMPANY (OTIS). **IT IS DELIVERED** TO OTHERS ON THE EXPRESS CONDITION THAT IT WILL BE USED ONLY FOR, OR ON BEHALF OF, OTIS; THAT NEITHER IT NOR THE INFORMATION IT CONTAINS WILL BE REPRODUCED OR DISCLOSED, IN WHOLE OR IN PART, WITHOUT THE PRIOR WRITTEN CONSENT OF OTIS; AND THAT ON DEMAND IT AND ANY COPIES WILL BE PROMPTLY RETURNED TO OTIS.

UNPUBLISHED WORK © OTIS ELEVATOR COMPANY

ALL RIGHTS RESERVED.

DWG KAA26800ACP

OTIS ENGINEERING CENTER

CHANGWON, KOREA

CHANGES

2017-08-21 REVISED. SEE KAA26800ACP_CDOC.DOC FOR DETAILS (CN1037523) MILLETT S / MAGDA RF

OTIS United Technologies

HVPB
(High Voltage Power Board)
OVFR03A-406

DRAWN	S. MILLETT	ORIGINAL DATE	2017-01-06
CHK	W. HUANG		
APPD	R. MAGDA	SHEETS	
AUTH	CN897873	SHEET	3

DRAFTED IN ACCORDANCE WITH OTIS DOCUMENT 52847

CR-4 : @KAA26800ACP_LIB.KAA26800ACP_LIB(SCH_1):PAGE4

A3

AC LINE SENSING HIGH VOLTAGE

FULL SCALE : +/- 873V PEAK @ +2.44V / 0V

ROOM = AC_SENS_HIGH

14B4< AC_T

14A4< AC_S

14A4< AC_R

R237 200K 1% 0.25W
R236 200K 1% 0.25W
R235 200K 1% 0.25W
R234 200K 1% 0.25W
R233 200K 1% 0.25W

R232 200K 1% 0.25W
R231 200K 1% 0.25W
R230 200K 1% 0.25W
R229 200K 1% 0.25W
R228 200K 1% 0.25W

R225 200K 1% 0.25W
R224 200K 1% 0.25W
R223 200K 1% 0.25W
R222 200K 1% 0.25W
R221 200K 1% 0.25W

ROOM=AC_SENS_HIGH
ROOM=AC_SENS_HIGH
ROOM=AC_SENS_HIGH
ROOM=AC_SENS_HIGH
ROOM=AC_SENS_HIGH
ROOM=AC_SENS_HIGH
ROOM=AC_SENS_HIGH
ROOM=AC_SENS_HIGH
ROOM=AC_SENS_HIGH
ROOM=AC_SENS_HIGH
ROOM=AC_SENS_HIGH
ROOM=AC_SENS_HIGH
ROOM=AC_SENS_HIGH

C120 0.01UF 50V 5%
C124 0.01UF 50V 5%
C354 0.01UF 50V 5%

R216 2K 1% 0.1W
R546 2K 1% 0.1W
R542 2K 1% 0.1W
R207 2K 1% 0.1W
R208 2K 1% 0.1W
R541 2K 1% 0.1W

GND_AC

ROOM = AC_SENS_LOW

R534 200K 1% 0.125W
R518 200K 1% 0.125W

U66 TSV914

R517 200K 1% 0.125W
R516 200K 1% 0.125W

+5V_AC
GND_AC
VRS- 6A1<

4D4< 4C4< 5B6< VREF_VAC

R547 20K 1% 0.1W
R219 20K 1% 0.1W

U66 TSV914

C118 0.1U 16V 10%

R532 200K 1% 0.125W
R515 200K 1% 0.125W

U66 TSV914

R533 200K 1% 0.125W
R548 200K 1% 0.125W

+5V_AC
GND_AC
VST- 6C1<

4D4< 4B4< 5B6< VREF_VAC

C360 0.01UF 50V 5%
C383 0.01UF 50V 5%

GND_AC

R549 200K 1% 0.125W

R550 200K 1% 0.125W
VTR-

U66 TSV914

R218 200K 1% 0.125W
R217 200K 1% 0.125W

+5V_AC
GND_AC

5B6< 4C4< 4B4< VREF_VAC

ROOM=AC_SENS_LOW
ROOM=AC_SENS_LOW
ROOM=AC_SENS_LOW
ROOM=AC_SENS_LOW
ROOM=AC_SENS_LOW
ROOM=AC_SENS_LOW
ROOM=AC_SENS_LOW
ROOM=AC_SENS_LOW
ROOM=AC_SENS_LOW

ROOM=AC_SENS_LOW
ROOM=AC_SENS_LOW
ROOM=AC_SENS_LOW
ROOM=AC_SENS_LOW
ROOM=AC_SENS_LOW
ROOM=AC_SENS_LOW
ROOM=AC_SENS_LOW
ROOM=AC_SENS_LOW

A3

AC LINE SENSING SMPS

[VOLTAGE REF AT LOW VOLTAGE]

ROOM = AC_SENS_CIR

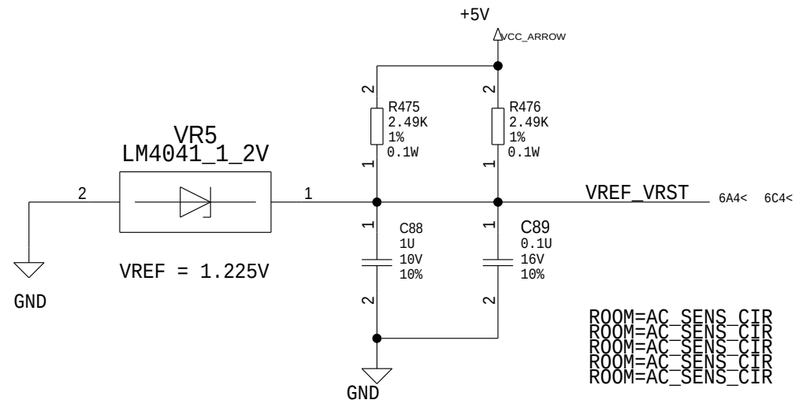

[VOLTAGE REF AT HIGH VOLTAGE]

ROOM = AC_SENS_LOW

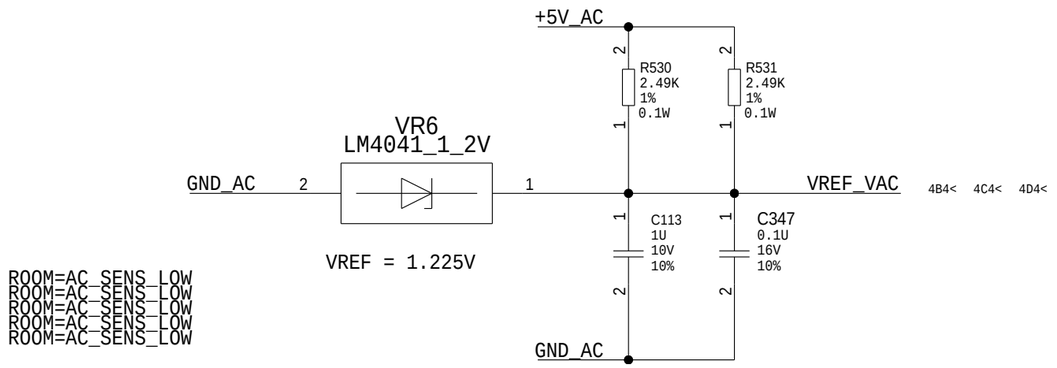

[FOR AC LINE VOLTAGE SENSING CIRCUIT POWER]

ROOM = AC_SENS_PWR

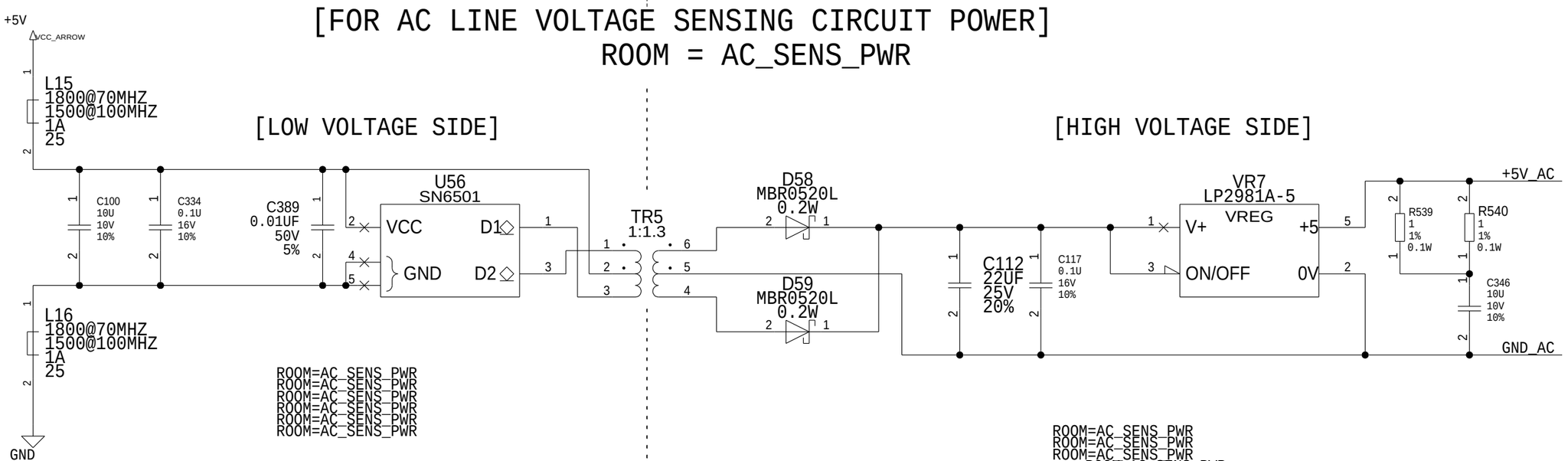

WARNING

THIS WORK AND THE INFORMATION IT CONTAINS ARE THE PROPERTY OF OTIS ELEVATOR COMPANY (OTIS). **IT IS DELIVERED** TO OTHERS ON THE EXPRESS CONDITION THAT IT WILL BE USED ONLY FOR, OR ON BEHALF OF, OTIS; THAT NEITHER IT NOR THE INFORMATION IT CONTAINS WILL BE REPRODUCED OR DISCLOSED, IN WHOLE OR IN PART, WITHOUT THE PRIOR WRITTEN CONSENT OF OTIS; AND THAT ON DEMAND IT AND ANY COPIES WILL BE PROMPTLY RETURNED TO OTIS.

UNPUBLISHED WORK © OTIS ELEVATOR COMPANY

ALL RIGHTS RESERVED.

DWG KAA26800ACP

OTIS ENGINEERING CENTER

CHANGWON, KOREA

CHANGES

2017-08-21 REVISED. SEE KAA26800ACP_CDOC.DOC FOR DETAILS (CN1037523) MILLETT S / MAGDA RF

HVPB
(High Voltage Power Board)
OVFR03A-406

DRAWN	S. MILLETT	ORIGINAL DATE	2017-01-06
CHK	W. HUANG		
APPD	R. MAGDA	SHEETS	
AUTH	CN897873	SHEET	5

DRAFTED IN ACCORDANCE WITH OTIS DOCUMENT 52847

CR-6 : @KAA26800ACP_LIB.KAA26800ACP_LIB(SCH_1):PAGE6

AC LINE SENSING LOW VOLTAGE

ROOM = AC_SENS_CIR

A3

ROOM=AC_SENS_CIR
ROOM=AC_SENS_CIR
ROOM=AC_SENS_CIR
ROOM=AC_SENS_CIR
ROOM=AC_SENS_CIR
ROOM=AC_SENS_CIR
ROOM=AC_SENS_CIR
ROOM=AC_SENS_CIR
ROOM=AC_SENS_CIR
ROOM=AC_SENS_CIR

4B5< VRS-
C106 100PF 50V 5%
+5V_AC
GND_AC
C105 2.2U 16V 10%
C104 0.1U 16V 10%
C281 0.01UF 50V 5%
GAIN = 1
U61 ACPL-C87
VIN
SHDN
VDD1
GND1
VOUT+
VOUT-
VDD2
GND2
+5V
VCC_ARROW
GND
R183 10K 1% 0.1W
R182 10K 1% 0.1W
C92 100PF 50V 5%
R175 10K 1% 0.1W
C325 100PF 50V 5%
R500 10K 1% 0.1W
ROOM=AC_SENS_CIR
U53 TLC2274
-
+
OUT
V+
V-/GND
-5V
R487 10K 1% 0.1W
C90 100PF 50V 5%
R163 20K 1% 0.1W
R478 20K 1% 0.1W
C320 100PF 50V 5%
5B3< 6C4<
VREF_VRST
R484 10K 1% 0.1W
R485 20K 1% 0.1W
R479 20K 1% 0.1W
VRS_OUT-
3B5<>
C322 0.1U 16V 10%
C321 0.1U 16V 10%
C380 100PF 50V 5%

ROOM=AC_SENS_CIR
ROOM=AC_SENS_CIR
ROOM=AC_SENS_CIR
ROOM=AC_SENS_CIR
ROOM=AC_SENS_CIR
ROOM=AC_SENS_CIR
ROOM=AC_SENS_CIR
ROOM=AC_SENS_CIR
ROOM=AC_SENS_CIR
ROOM=AC_SENS_CIR

C97 2.2U 16V 10%
C330 0.1U 16V 10%
C378 0.01UF 50V 5%
C324 100PF 50V 5%
C91 100PF 50V 5%

GAIN = 4
RANGE = +/-4.88V

4C6< VST-
C109 100PF 50V 5%
+5V_AC
GND_AC
C108 2.2U 16V 10%
C107 0.1U 16V 10%
C282 0.01UF 50V 5%
GAIN = 1
U60 ACPL-C87
VIN
SHDN
VDD1
GND1
VOUT+
VOUT-
VDD2
GND2
R184 10K 1% 0.1W
R185 10K 1% 0.1W
C93 100PF 50V 5%
R508 10K 1% 0.1W
C366 0.01UF 50V 5%
C98 2.2U 16V 10%
C331 0.1U 16V 10%
R176 10K 1% 0.1W
U53 TLC2274
R491 10K 1% 0.1W
C323 100PF 50V 5%
R492 20K 1% 0.1W
R493 20K 1% 0.1W
5B3< 6A4<
VREF_VRST
R486 10K 1% 0.1W
R164 20K 1% 0.1W
R477 20K 1% 0.1W
VST_OUT-
3B5<>

ROOM=AC_SENS_CIR
ROOM=AC_SENS_CIR
ROOM=AC_SENS_CIR
ROOM=AC_SENS_CIR
ROOM=AC_SENS_CIR
ROOM=AC_SENS_CIR
ROOM=AC_SENS_CIR
ROOM=AC_SENS_CIR
ROOM=AC_SENS_CIR
ROOM=AC_SENS_CIR

WARNING
THIS WORK AND THE INFORMATION IT CONTAINS ARE THE PROPERTY OF OTIS ELEVATOR COMPANY (OTIS). **IT IS DELIVERED** TO OTHERS ON THE EXPRESS CONDITION THAT IT WILL BE USED ONLY FOR, OR ON BEHALF OF, OTIS; THAT NEITHER IT NOR THE INFORMATION IT CONTAINS WILL BE REPRODUCED OR DISCLOSED, IN WHOLE OR IN PART, WITHOUT THE PRIOR WRITTEN CONSENT OF OTIS; AND THAT ON DEMAND IT AND ANY COPIES WILL BE PROMPTLY RETURNED TO OTIS.
UNPUBLISHED WORK © OTIS ELEVATOR COMPANY
ALL RIGHTS RESERVED.

DWG KAA26800ACP

OTIS ENGINEERING CENTER
CHANGWON, KOREA

CHANGES

2017-08-21 REVISED. SEE KAA26800ACP_CDOC.DOC FOR DETAILS (CN1037523) MILLETT S / MAGDA RF

OTIS
United Technologies

HVPB
(High Voltage Power Board)
OVFR03A-406

DRAWN	S. MILLETT	ORIGINAL DATE 2017-01-06
CHK	W. HUANG	
APPD	R. MAGDA	SHEETS
AUTH	CN897873	SHEET 6

DRAFTED IN ACCORDANCE WITH OTIS DOCUMENT 52847

CR-7 : @KAA26800ACP_LIB.KAA26800ACP_LIB(SCH_1):PAGE7

A3

DC BUS TERMINALS AND SENSING

ROOM = DC_BUS

31A6< 30A6< 29A6< 28A6< 37A2< 27A6< 36A2< 9A1< 32A6<

DC_BUS+

ASSEMBLY_SEC1=YES
ASSEMBLY_SEC2=NO
ASSEMBLY_SEC3=NO
ASSEMBLY_SEC4=NO

TB5-1

1
2

AAA190CJ3

ASSEMBLY_SEC1=NO
ASSEMBLY_SEC2=NO
ASSEMBLY_SEC3=YES
ASSEMBLY_SEC4=YES

TB8

1
3
4
5

DC BUS+

LOCATED UNDER GDCB2

TB5

A1
B1

WAGO_2061-601_998-404
AAA303FW56
20_16AWG

VERIFY CONNECTION
DC BUS TEST

LOCATED UNDER GDCB2

2
6
7
8

DC_BUS-

24_6AWG
AAA303FW54

DC BUS POWER CONNECTION

TB6

A1
B1

WAGO_2061-601_998-404
AAA303FW56
20_16AWG

ASSEMBLY_SEC1=YES
ASSEMBLY_SEC2=NO
ASSEMBLY_SEC3=NO
ASSEMBLY_SEC4=NO

TB6-1

1
2

AAA190CJ3

TB5-1 AND TB6-1 ARE LOW COST
BLADE CONNECTIONS FOR
DC BUS TEST POINTS FOR ACD4 MR

COVER REQUIRED FOR STANDALONE

C236
460UF
900V
10%

ASSEMBLY_SEC1=NO
ASSEMBLY_SEC2=NO
ASSEMBLY_SEC3=NO
ASSEMBLY_SEC4=NO

C326
460UF
900V
10%

ASSEMBLY_SEC1=NO
ASSEMBLY_SEC3=NO
ASSEMBLY_SEC2=NO
ASSEMBLY_SEC4=NO

MOUNTING DURING
DRIVE ASSEMBLY

R483 49.9K 1W 1%
R490 49.9K 1W 1%
R489 49.9K 1W 1%
R488 49.9K 1W 1%
R482 49.9K 1W 1%

10 IN SERIES
EACH
0.289W @ 1200V
0.113W @ 750V

DC_SENS+ 8B1<

R473 2K 1% 0.1W
R474 2K 1% 0.1W

DC_SENS- 8B1<

R481 49.9K 1W 1%
R501 49.9K 1W 1%
R502 49.9K 1W 1%
R503 49.9K 1W 1%
R507 49.9K 1W 1%

ROOM = DC_BUS_MID

FULL SCALE : 1230V @ [2.46]
NOMINAL : 750V @ [1.5V]
SCALE 1V = 0.002V

ROOM=DC_BUS_MID
ROOM=DC_BUS_MID

ROOM=DC_BUS
ROOM=DC_BUS
ROOM=DC_BUS
ROOM=DC_BUS

ROOM=DC_BUS
ROOM=DC_BUS
ROOM=DC_BUS
ROOM=DC_BUS
ROOM=DC_BUS
ROOM=DC_BUS
ROOM=DC_BUS
ROOM=DC_BUS
ROOM=DC_BUS
ROOM=DC_BUS
ROOM=DC_BUS
ROOM=DC_BUS
ROOM=DC_BUS

37B2< 36B2< 9D2< DC_BUS-

WARNING

THIS WORK AND THE INFORMATION IT CONTAINS ARE THE PROPERTY OF OTIS ELEVATOR COMPANY (OTIS). **IT IS DELIVERED** TO OTHERS ON THE EXPRESS CONDITION THAT IT WILL BE USED ONLY FOR, OR ON BEHALF OF, OTIS; THAT NEITHER IT NOR THE INFORMATION IT CONTAINS WILL BE REPRODUCED OR DISCLOSED, IN WHOLE OR IN PART, WITHOUT THE PRIOR WRITTEN CONSENT OF OTIS; AND THAT ON DEMAND IT AND ANY COPIES WILL BE PROMPTLY RETURNED TO OTIS.

UNPUBLISHED WORK © OTIS ELEVATOR COMPANY

ALL RIGHTS RESERVED.

DWG KAA26800ACP

OTIS ENGINEERING CENTER
CHANGWON, KOREA

CHANGES

2017-08-21 REVISED. SEE KAA26800ACP_CDOC.DOC FOR DETAILS (CN1037523) MILLETT S / MAGDA RF

OTIS
United Technologies

HVPB
(High Voltage Power Board)
OVFR03A-406

DRAWN	S. MILLETT	ORIGINAL DATE	2017-01-06
CHK	W. HUANG		
APPD	R. MAGDA	SHEETS	
AUTH	CN897873	SHEET	7

DRAFTED IN ACCORDANCE
WITH OTIS DOCUMENT 52847

CR-8 : @KAA26800ACP_LIB.KAA26800ACP_LIB(SCH_1):PAGE8

A3

DC BUS SENSING ISOLATION CIRCUIT

ROOM=DC_SENS_CIR

HIGH VOLTAGE
DC BUS REFERENCED

7B5< DC_SENS+

7C5< DC_SENS-

38B3< 38A2< 8C6< +5V_DC
38D3< 38C3<

38B3< 38B2< 8D6< GND_DC
38D3< 38D2< 38C3<

C27 0.01UF 50V 5%

C309 100PF 50V 5%

C83 2.2U 16V 10%

C84 0.1U 16V 10%

C395 0.01UF 50V 5%

U46 ACPL-C87

VIN, SHDN, VDD1, GND1, VOUT+, VOUT-, VDD2, GND2

R154 10K 1% 0.1W

R156 10K 1% 0.1W

C303 0.01UF 50V 5%

R467 20K 1% 0.1W

C302 0.1U 16V 10%

C396 0.01UF 50V 5%

U45 TSV914

-, +, V+, V-

UDC 3B2<

[VOLTAGE RANGE : 4.92V / 0V]

C80 0.01UF 50V 5%

R155 20K 1% 0.1W

C400 0.01UF 50V 5%

C301 1U 10V 10%

C297 0.1U 16V 10%

R466 20K 1% 0.1W

R465 20K 1% 0.1W

U45 TSV914

ROOM=DC_SENS_CIR
ROOM=DC_SENS_CIR
ROOM=DC_SENS_CIR
ROOM=DC_SENS_CIR
ROOM=DC_SENS_CIR

ROOM=DC_SENS_CIR ROOM=DC_SENS_CIR
ROOM=DC_SENS_CIR ROOM=DC_SENS_CIR
ROOM=DC_SENS_CIR ROOM=DC_SENS_CIR
ROOM=DC_SENS_CIR ROOM=DC_SENS_CIR
ROOM=DC_SENS_CIR ROOM=DC_SENS_CIR

ROOM=DC_SENS_CIR
ROOM=DC_SENS_CIR
ROOM=DC_SENS_CIR

[FOR DC BUS VOLTAGE SENSING CIRCUIT POWER]

[LOW VOLTAGE SIDE]

L20 1800@70MHZ 1500@100MHZ 1A 25

L21 1800@70MHZ 1500@100MHZ 1A 25

C70 10U 10V 10%

C74 0.1U 16V 10%

C399 0.01UF 50V 5%

U43 SN6501

VCC, GND, D1, D2

TR4 1:1.3

D42 MBR0520L 0.2W

D41 MBR0520L 0.2W

C81 22UF 25V 20%

C82 0.1U 16V 10%

VR4 LP2981A-5

VREG, V+, ON/OFF, +5, 0V

R468 1 1% 0.1W

R471 1 1% 0.1W

C310 10U 10V 10%

+5V_DC 8B1< 38A2< 38B3< 38C3< 38D3<

GND_DC 38D2< 38D3< 8B1< 38B2< 38B3< 38C3<

HIGH VOLTAGE
DC BUS REFERENCED

ROOM=DC_BUS_MID

ROOM=DC_BUS_MID ROOM=DC_BUS_MID
ROOM=DC_BUS_MID ROOM=DC_BUS_MID
ROOM=DC_BUS_MID ROOM=DC_BUS_MID
ROOM=DC_BUS_MID ROOM=DC_BUS_MID
ROOM=DC_BUS_MID ROOM=DC_BUS_MID
ROOM=DC_BUS_MID ROOM=DC_BUS_MID
ROOM=DC_BUS_MID ROOM=DC_BUS_MID

WARNING

THIS WORK AND THE INFORMATION IT CONTAINS ARE THE PROPERTY OF OTIS ELEVATOR COMPANY (OTIS). **IT IS DELIVERED** TO OTHERS ON THE EXPRESS CONDITION THAT IT WILL BE USED ONLY FOR, OR ON BEHALF OF, OTIS; THAT NEITHER IT NOR THE INFORMATION IT CONTAINS WILL BE REPRODUCED OR DISCLOSED, IN WHOLE OR IN PART, WITHOUT THE PRIOR WRITTEN CONSENT OF OTIS; AND THAT ON DEMAND IT AND ANY COPIES WILL BE PROMPTLY RETURNED TO OTIS.

UNPUBLISHED WORK © OTIS ELEVATOR COMPANY

ALL RIGHTS RESERVED.

DWG KAA26800ACP

OTIS ENGINEERING CENTER

CHANGWON, KOREA

CHANGES

2017-08-21 REVISED. SEE KAA26800ACP_CDOC.DOC FOR DETAILS (CN1037523) MILLETT S / MAGDA RF

OTIS United Technologies

HVPB
(High Voltage Power Board)
OVFR03A-406

DRAWN	S. MILLETT	ORIGINAL DATE	2017-01-06
CHK	W. HUANG		
APPD	R. MAGDA	SHEETS	
AUTH	CN897873	SHEET	8

DRAFTED IN ACCORDANCE WITH OTIS DOCUMENT 52847

CR-9 : @KAA26800ACP_LIB.KAA26800ACP_LIB(SCH_1):PAGE9

A3

DC BUS DISCHARGING CIRCUIT

ROOM = DC_BUS

8 IN SERIES
EACH
0.451W @ 1200V
0.176W @ 750V

10 IN SERIES
EACH
0.289W @ 1200V
0.113W @ 750V

DC_BUS+

36A2< 32A6< 28A6< 27A6< 31A6< 30A6< 7A2< 29A6< 37A2<

R330 49.9K 1W 1%
R339 49.9K 1W 1%
R345 49.9K 1W 1%
R347 49.9K 1W 1%
R346 49.9K 1W 1%
R340 49.9K 1W 1%
R334 49.9K 1W 1%
R329 49.9K 1W 1%
R338 49.9K 1W 1%
R331 49.9K 1W 1%

R449 49.9K 1W 1%	R428 49.9K 1W 1%	R399 49.9K 1W 1%	R414 49.9K 1W 1%	R433 49.9K 1W 1%	R440 49.9K 1W 1%
R400 49.9K 1W 1%	R415 49.9K 1W 1%	R434 49.9K 1W 1%	R429 49.9K 1W 1%	R450 49.9K 1W 1%	R441 49.9K 1W 1%
R442 49.9K 1W 1%	R430 49.9K 1W 1%	R451 49.9K 1W 1%	R416 49.9K 1W 1%	R401 49.9K 1W 1%	R435 49.9K 1W 1%
R436 49.9K 1W 1%	R417 49.9K 1W 1%	R443 49.9K 1W 1%	R431 49.9K 1W 1%	R402 49.9K 1W 1%	R452 49.9K 1W 1%
R363 49.9K 1W 1%	R348 49.9K 1W 1%	R390 49.9K 1W 1%	R373 49.9K 1W 1%	R395 49.9K 1W 1%	R352 49.9K 1W 1%
R349 49.9K 1W 1%	R364 49.9K 1W 1%	R374 49.9K 1W 1%	R396 49.9K 1W 1%	R353 49.9K 1W 1%	R391 49.9K 1W 1%
R375 49.9K 1W 1%	R350 49.9K 1W 1%	R392 49.9K 1W 1%	R365 49.9K 1W 1%	R397 49.9K 1W 1%	R354 49.9K 1W 1%
R398 49.9K 1W 1%	R366 49.9K 1W 1%	R351 49.9K 1W 1%	R376 49.9K 1W 1%	R355 49.9K 1W 1%	R393 49.9K 1W 1%

STGD5NB120SZ
Q5

+5V
VCC_ARROW
R328 324 0.1W 1%
C216 0.1U 16V 10%
R77 324 0.1W 1%
U20 TLP385
BZX84C12 Z39 12V 0.250W
C219 0.1UF 50V 10%
GND

37B2< 36B2< 7D2< DC_BUS-

R336 49.9K 1W 1%
R335 49.9K 1W 1%
R341 49.9K 1W 1%
R342 49.9K 1W 1%

DO NOT POPULATE IF DISCHARGE CIRCUIT IS PRESENT
THESE 4 RESISTORS ARE JUST PLACEHOLDERS AND NOT INTENDED FOR USE

ASSEMBLY_SEC1=NO
ASSEMBLY_SEC2=NO
ASSEMBLY_SEC3=NO
ASSEMBLY_SEC4=NO
ASSEMBLY_SEC1=NO
ASSEMBLY_SEC2=NO
ASSEMBLY_SEC3=NO
ASSEMBLY_SEC4=NO

ASSEMBLY_SEC1=NO
ASSEMBLY_SEC2=NO
ASSEMBLY_SEC3=NO
ASSEMBLY_SEC4=NO
ASSEMBLY_SEC1=NO
ASSEMBLY_SEC2=NO
ASSEMBLY_SEC3=NO
ASSEMBLY_SEC4=NO

ROOM=DC_BUS

Q5 IGBT TO BE FULLY ENCAPSULATED IN COATING

WARNING
THIS WORK AND THE INFORMATION IT CONTAINS ARE THE PROPERTY OF OTIS ELEVATOR COMPANY (OTIS). IT IS DELIVERED TO OTHERS ON THE EXPRESS CONDITION THAT IT WILL BE USED ONLY FOR, OR ON BEHALF OF, OTIS, THAT NEITHER IT NOR THE INFORMATION IT CONTAINS WILL BE REPRODUCED OR DISCLOSED, IN WHOLE OR IN PART, WITHOUT THE PRIOR WRITTEN CONSENT OF OTIS, AND THAT ON DEMAND IT AND ANY COPIES WILL BE PROMPTLY RETURNED TO OTIS.
UNPUBLISHED WORK © OTIS ELEVATOR COMPANY
ALL RIGHTS RESERVED.

DWG KAA26800ACP

OTIS ENGINEERING CENTER
CHANGWON, KOREA

CHANGES
2017-08-21 REVISED. SEE KAA26800ACP_CDOC.DOC FOR DETAILS (CN1037523) MILLETT S / MAGDA RF

OTIS
United Technologies

HVPB
(High Voltage Power Board)
OVFR03A-406

DRAWN	S. MILLETT	ORIGINAL DATE	2017-01-06
CHK	W. HUANG		
APPD	R. MAGDA	SHEETS	
AUTH	CN897873	SHEET	9

DRAFTED IN ACCORDANCE WITH OTIS DOCUMENT 52847

CR-10 : @KAA26800ACP_LIB KAA26800ACP_LIB(SCH_1):PAGE10

A3

ROOM=CNV_CURR_SENS

CONVERTER CURRENT SENSORS

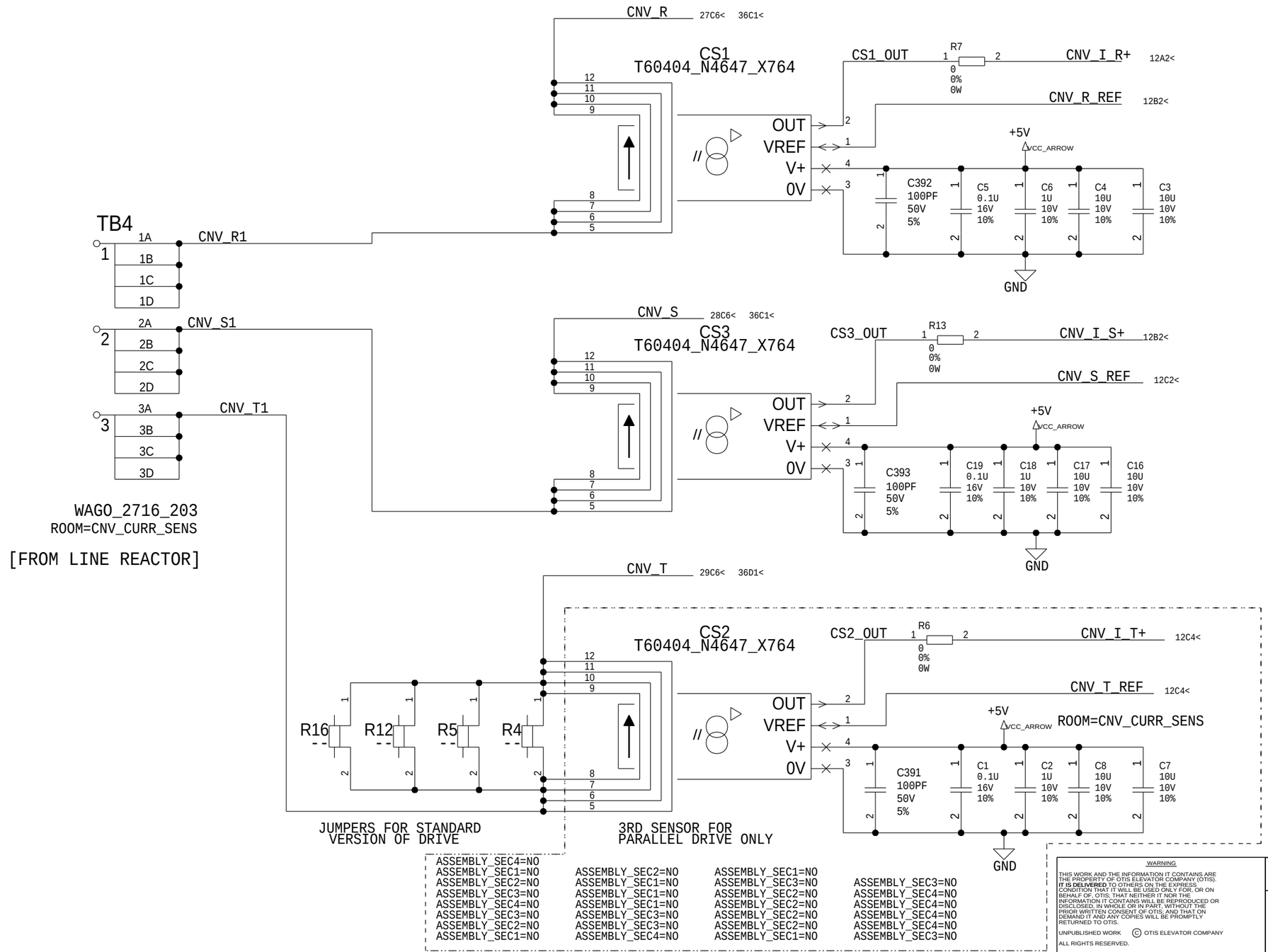

WARNING

THIS WORK AND THE INFORMATION IT CONTAINS ARE THE PROPERTY OF OTIS ELEVATOR COMPANY (OTIS). **IT IS DELIVERED** TO OTHERS ON THE EXPRESS CONDITION THAT IT WILL BE USED ONLY FOR, OR ON BEHALF OF, OTIS; THAT NEITHER IT NOR THE INFORMATION IT CONTAINS WILL BE REPRODUCED OR DISCLOSED, IN WHOLE OR IN PART, WITHOUT THE PRIOR WRITTEN CONSENT OF OTIS; AND THAT ON DEMAND IT AND ANY COPIES WILL BE PROMPTLY RETURNED TO OTIS.

UNPUBLISHED WORK © OTIS ELEVATOR COMPANY

ALL RIGHTS RESERVED.

DWG KAA26800ACP

OTIS ENGINEERING CENTER

CHANGWON, KOREA

CHANGES

2017-08-21 REVISED. SEE KAA26800ACP_CDOC.DOC FOR DETAILS (CN1037523) MILLETT S / MAGDA RF

OTIS United Technologies

HVPB
(High Voltage Power Board)
OVFR03A-406

DRAWN	S. MILLETT	ORIGINAL DATE	2017-01-06
CHK	W. HUANG		
APPD	R. MAGDA	SHEETS	
AUTH	CN897873	SHEET	10

DRAFTED IN ACCORDANCE WITH OTIS DOCUMENT 52847

A3

INVERTER CURRENT SENSORS

ROOM=INV_CURR_SENS

ROOM=INV_CURR_SENS
ROOM=INV_CURR_SENS
ROOM=INV_CURR_SENS
ROOM=INV_CURR_SENS
ROOM=INV_CURR_SENS
ROOM=INV_CURR_SENS

13A2< INV_I_U+ — R577 (0, 0%, 0W) — CS5_OUT

13B2< INV_U_REF

CS5
T60404_N4647_X764

+5V (VCC_ARROW)

OUT
VREF
V+
0V

C131 10U 10V 10%
C133 10U 10V 10%
C135 1U 10V 10%
C137 0.1U 16V 10%
C397 100PF 50V 5%

GND

37C1< 30C6< INV_U1

ROOM=INV_CURR_SENS
ROOM=INV_CURR_SENS
ROOM=INV_CURR_SENS
ROOM=INV_CURR_SENS
ROOM=INV_CURR_SENS
ROOM=INV_CURR_SENS

13B4< INV_I_V+ — R148 (0, 0%, 0W)

13C4< INV_V_REF

CS6
T60404_N4647_X764

+5V (VCC_ARROW)

OUT
VREF
V+
0V

C140 10U 10V 10%
C141 10U 10V 10%
C142 1U 10V 10%
C143 0.1U 16V 10%
C398 100PF 50V 5%

GND

37D1< 31C6< INV_V1

ROOM=INV_CURR_SENS
ROOM=INV_CURR_SENS
ROOM=INV_CURR_SENS
ROOM=INV_CURR_SENS
ROOM=INV_CURR_SENS
ROOM=INV_CURR_SENS

13C2< INV_I_W+ — R576 (0, 0%, 0W) — CS4_OUT

13D2< INV_W_REF

CS4
T60404_N4647_X764

+5V (VCC_ARROW)

OUT
VREF
V+
0V

C130 10U 10V 10%
C132 10U 10V 10%
C134 1U 10V 10%
C136 0.1U 16V 10%
C401 100PF 50V 5%

GND

37D1< 32C6< INV_W1

WAGO_745_653
TB7

INV_U → 1
INV_V → 2
INV_W → 3

[5MM PIN LENGTH]

ROOM=INV_CURR_SENS

WARNING

THIS WORK AND THE INFORMATION IT CONTAINS ARE THE PROPERTY OF OTIS ELEVATOR COMPANY (OTIS). **IT IS DELIVERED** TO OTHERS ON THE EXPRESS CONDITION THAT IT WILL BE USED ONLY FOR, OR ON BEHALF OF, OTIS, THAT NEITHER IT NOR THE INFORMATION IT CONTAINS WILL BE REPRODUCED OR DISCLOSED, IN WHOLE OR IN PART, WITHOUT THE PRIOR WRITTEN CONSENT OF OTIS, AND THAT ON DEMAND IT AND ANY COPIES WILL BE PROMPTLY RETURNED TO OTIS.

UNPUBLISHED WORK © OTIS ELEVATOR COMPANY
ALL RIGHTS RESERVED.

DWG KAA26800ACP

OTIS ENGINEERING CENTER
CHANGWON, KOREA

CHANGES

2017-08-21 REVISED. SEE KAA26800ACP_CDOC.DOC FOR DETAILS (CN1037523) MILLETT S / MAGDA RF

OTIS — United Technologies

HVPB
(High Voltage Power Board)
OVFR03A-406

DRAWN	S. MILLETT	ORIGINAL DATE	2017-01-06
CHK	W. HUANG		
APPD	R. MAGDA	SHEETS	
AUTH	CN897873	SHEET	11

DRAFTED IN ACCORDANCE WITH OTIS DOCUMENT 52847

CR-12 : @KAA26800ACP_LIB,KAA26800ACP_LIB(SCH_1):PAGE12

A3

CONVERTER CURRENT SENSING CIRCUIT

ROOM=CNV_CURR_SENS

FC = 4.2KHZ

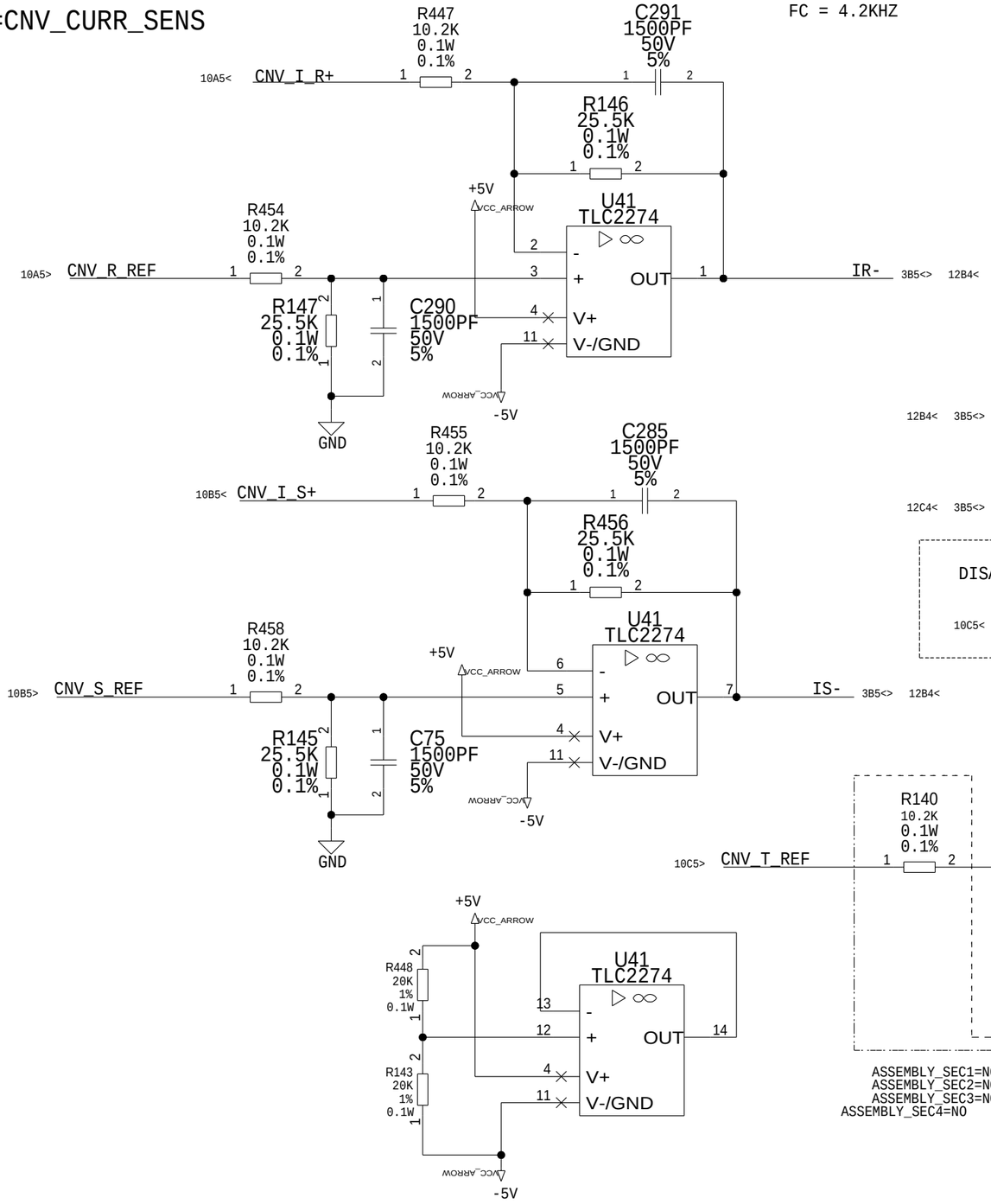

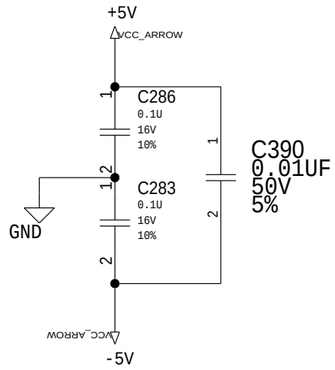

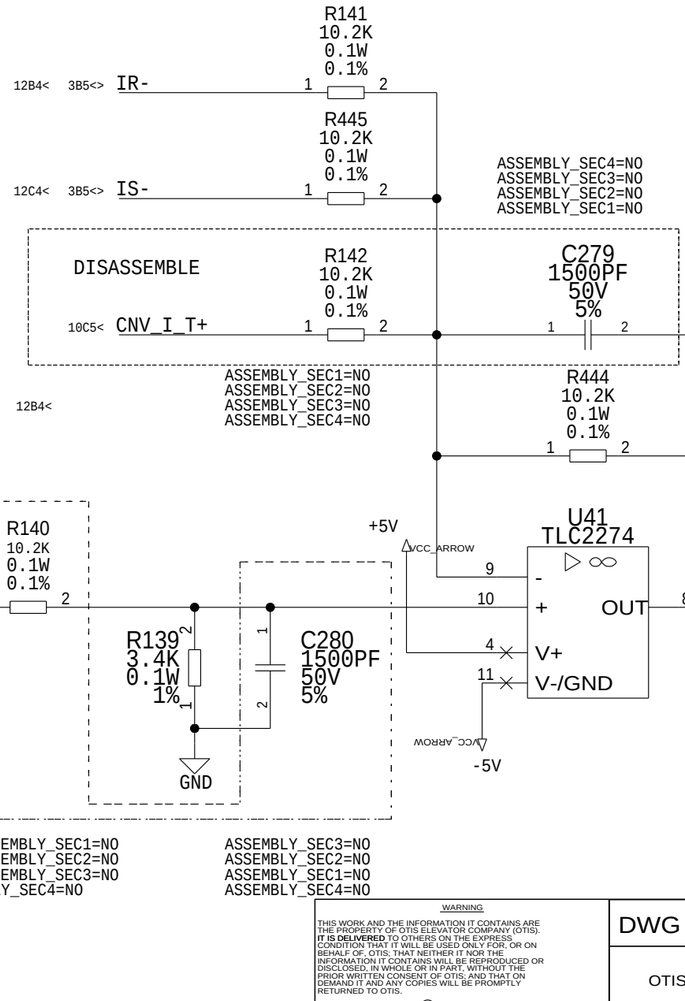

ROOM=CNV_CURR_SENS
ROOM=CNV_CURR_SENS
ROOM=CNV_CURR_SENS
ROOM=CNV_CURR_SENS
ROOM=CNV_CURR_SENS
ROOM=CNV_CURR_SENS
ROOM=CNV_CURR_SENS
ROOM=CNV_CURR_SENS
ROOM=CNV_CURR_SENS
ROOM=CNV_CURR_SENS
ROOM=CNV_CURR_SENS
ROOM=CNV_CURR_SENS
ROOM=CNV_CURR_SENS
ROOM=CNV_CURR_SENS
ROOM=CNV_CURR_SENS
ROOM=CNV_CURR_SENS
ROOM=CNV_CURR_SENS
ROOM=CNV_CURR_SENS
ROOM=CNV_CURR_SENS
ROOM=CNV_CURR_SENS
ROOM=CNV_CURR_SENS
ROOM=CNV_CURR_SENS

WARNING

THIS WORK AND THE INFORMATION IT CONTAINS ARE THE PROPERTY OF OTIS ELEVATOR COMPANY (OTIS). **IT IS DELIVERED** TO OTHERS ON THE EXPRESS CONDITION THAT IT WILL BE USED ONLY FOR, OR ON BEHALF OF, OTIS, THAT NEITHER IT NOR THE INFORMATION IT CONTAINS WILL BE REPRODUCED OR DISCLOSED, IN WHOLE OR IN PART, WITHOUT THE PRIOR WRITTEN CONSENT OF OTIS, AND THAT ON DEMAND IT AND ANY COPIES WILL BE PROMPTLY RETURNED TO OTIS.

UNPUBLISHED WORK © OTIS ELEVATOR COMPANY

ALL RIGHTS RESERVED.

DWG KAA26800ACP

OTIS ENGINEERING CENTER

CHANGWON, KOREA

CHANGES

2017-08-21 REVISED. SEE KAA26800ACP_CDOC.DOC FOR DETAILS (CN1037523) MILLETT S / MAGDA RF

OTIS United Technologies

HVPB
(High Voltage Power Board)
OVFR03A-406

DRAWN	S. MILLETT	ORIGINAL DATE	2017-01-06
CHK	W. HUANG		
APPD	R. MAGDA	SHEETS	
AUTH	CN897873	SHEET	12

DRAFTED IN ACCORDANCE WITH OTIS DOCUMENT 52847

CR-13 : @KAA26800ACP_LIB.KAA26800ACP_LIB(SCH_1):PAGE13

A3

INVERTER CURRENT SENSING CIRCUIT

ROOM = INV_CURR_SENS

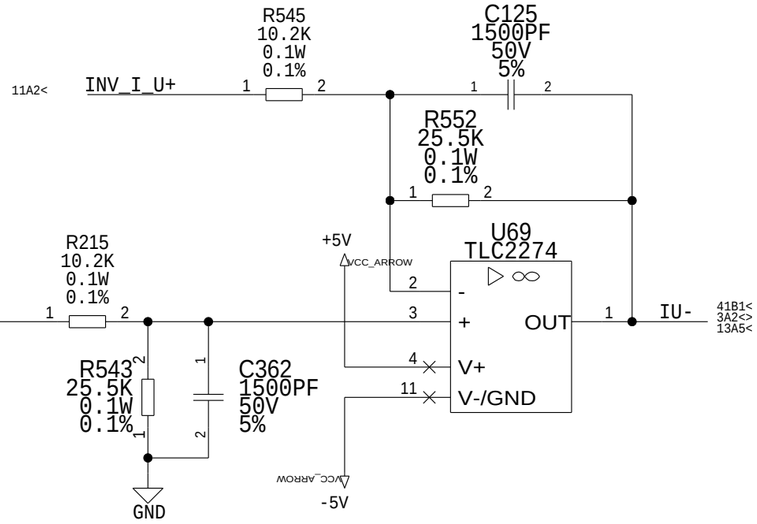

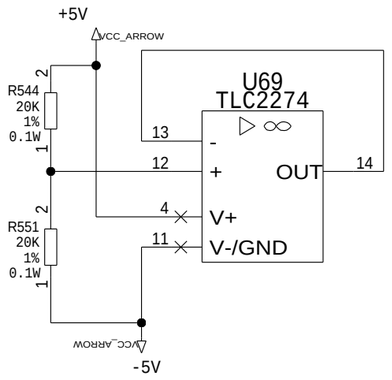

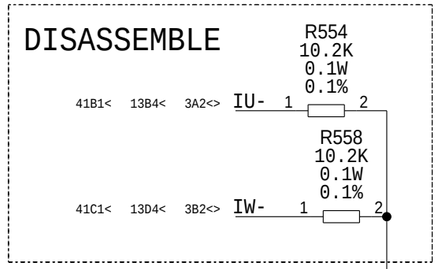

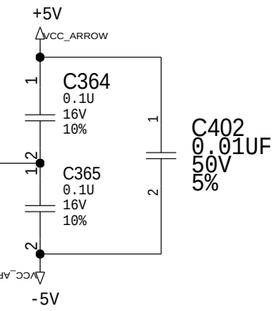

ASSEMBLY_SEC1=NO
ASSEMBLY_SEC2=NO
ASSEMBLY_SEC3=NO
ASSEMBLY_SEC4=NO

ASSEMBLY_SEC4=NO
ASSEMBLY_SEC1=NO
ASSEMBLY_SEC2=NO
ASSEMBLY_SEC3=NO

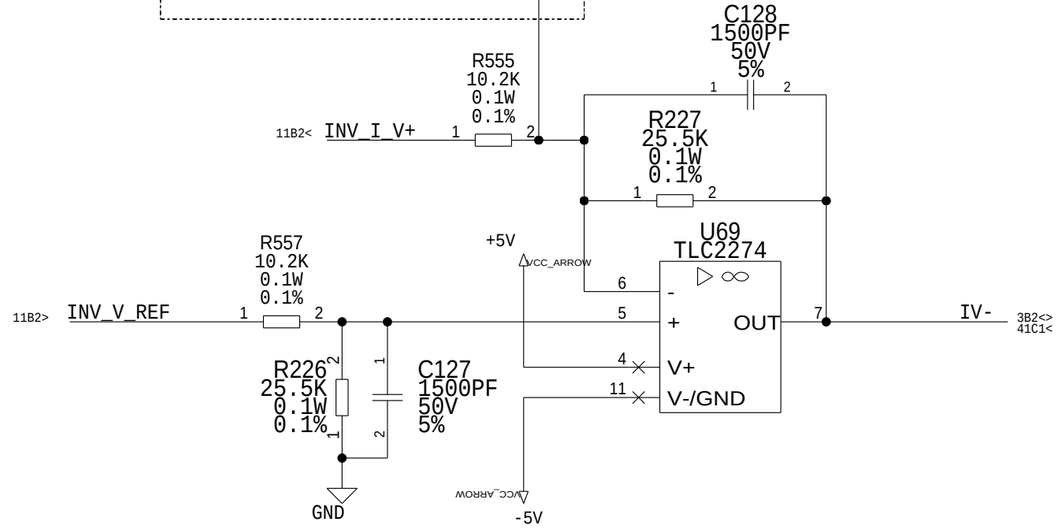

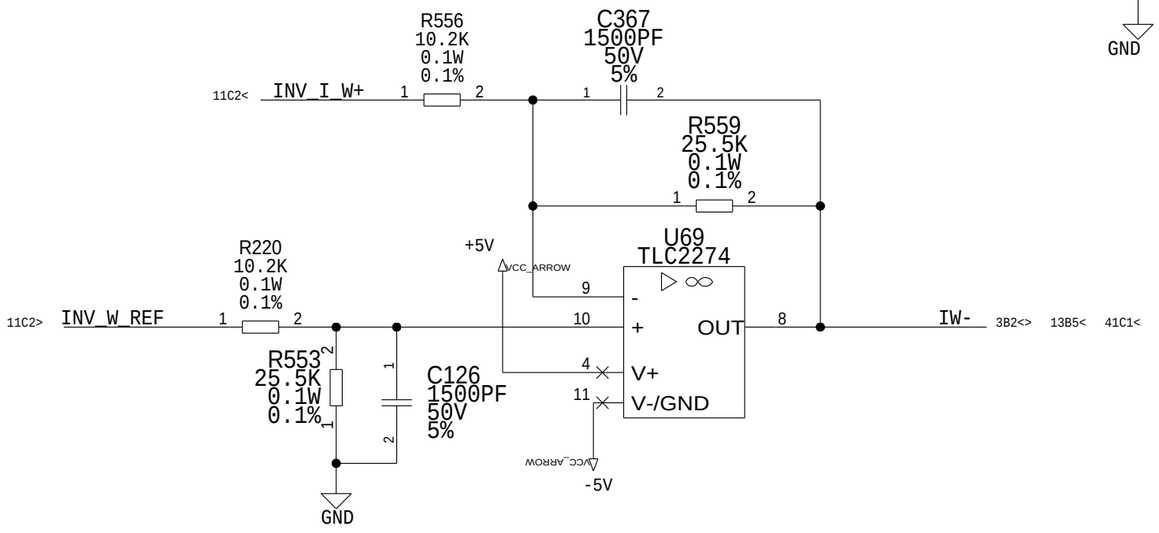

ROOM=INV_CURR_SENS
ROOM=INV_CURR_SENS
ROOM=INV_CURR_SENS

A3

MX & PX RELAYS

ROOM = AC_INPUT

ROOM=AC_INPUT
ROOM=AC_INPUT
ROOM=AC_INPUT
ROOM=AC_INPUT
ROOM=AC_INPUT
ROOM=AC_INPUT
ROOM=AC_INPUT
ROOM=AC_INPUT
ROOM=AC_INPUT
ROOM=AC_INPUT
ROOM=AC_INPUT
ROOM=AC_INPUT
ROOM=AC_INPUT
ROOM=AC_INPUT
ROOM=AC_INPUT
ROOM=AC_INPUT
ROOM=AC_INPUT
ROOM=AC_INPUT

P10
1
2
[TO SINGLE TRANS FOR CSA]
AAA447AF59

AC_R 4A1< 14A4< 4A1< 14A4<
AC_S 4A1< 14B4< 4A1< 14A4<
AC_T 4A1< 14B4<
[TO AC SENSING CIRCUIT]

[AC INPUT]
TB2
1A
1
AC_R
2A
2
AC_S
3A
3
AC_T
WAGO_2716_203

VR8 460VAC_WRK 615VDC_WRK 300J V
VR9 460VAC_WRK 615VDC_WRK 300J V
VR10 460VAC_WRK 615VDC_WRK 300J V
FV1 A71_H10X 1000V
GAS DISCHARGE TUBE
MTG_IP3

15B3< MX_OUT
D103 BAV99
DUMMY_P14_1
REL3
L18 1800@70MHZ 1500@100MHZ 1A 25
L19 1800@70MHZ 1500@100MHZ 1A 25
+24V
MX RELAY

R247 150 7W 5%
R251 150 7W 5%
L25 1800@70MHZ 1500@100MHZ 1A 25
R241 150 7W 5%
R243 150 7W 5%
+24V
D102 BAV99
REL4
REL5
DUMMY_P14_2
L26 1800@70MHZ 1500@100MHZ 1A 25
15B6< PX_OUT
AC_R3
PX RELAYS
[TO EMI FILTER]
TB3
D122 RGP02_20E
AC_T2
AC_S2
AC_R2
WAGO_2716_203

WARNING
THIS WORK AND THE INFORMATION IT CONTAINS ARE THE PROPERTY OF OTIS ELEVATOR COMPANY (OTIS). **IT IS DELIVERED** TO OTHERS ON THE EXPRESS CONDITION THAT IT WILL BE USED ONLY FOR, OR ON BEHALF OF, OTIS; THAT NEITHER IT NOR THE INFORMATION IT CONTAINS WILL BE REPRODUCED OR DISCLOSED, IN WHOLE OR IN PART, WITHOUT THE PRIOR WRITTEN CONSENT OF OTIS; AND THAT ON DEMAND IT AND ANY COPIES WILL BE PROMPTLY RETURNED TO OTIS.
UNPUBLISHED WORK © OTIS ELEVATOR COMPANY
ALL RIGHTS RESERVED.

DWG KAA26800ACP

OTIS ENGINEERING CENTER
CHANGWON, KOREA

CHANGES
2017-08-21 REVISED. SEE KAA26800ACP_CDOC.DOC FOR DETAILS (CN1037523) MILLETT S / MAGDA RF

HVPB
(High Voltage Power Board)
OVFR03A-406

DRAWN	S. MILLETT	ORIGINAL DATE	2017-01-06
CHK	W. HUANG		
APPD	R. MAGDA	SHEETS	
AUTH	CN897873	SHEET	14

DRAFTED IN ACCORDANCE WITH OTIS DOCUMENT 52847

A3

MX & PX RELAY CONTROL CIRCUITS

IF MX / PX FROM GDCB IS 5V, MX / PX RELAY IS PICKED

MX RELAY DRIVER

ROOM = MX_DRV

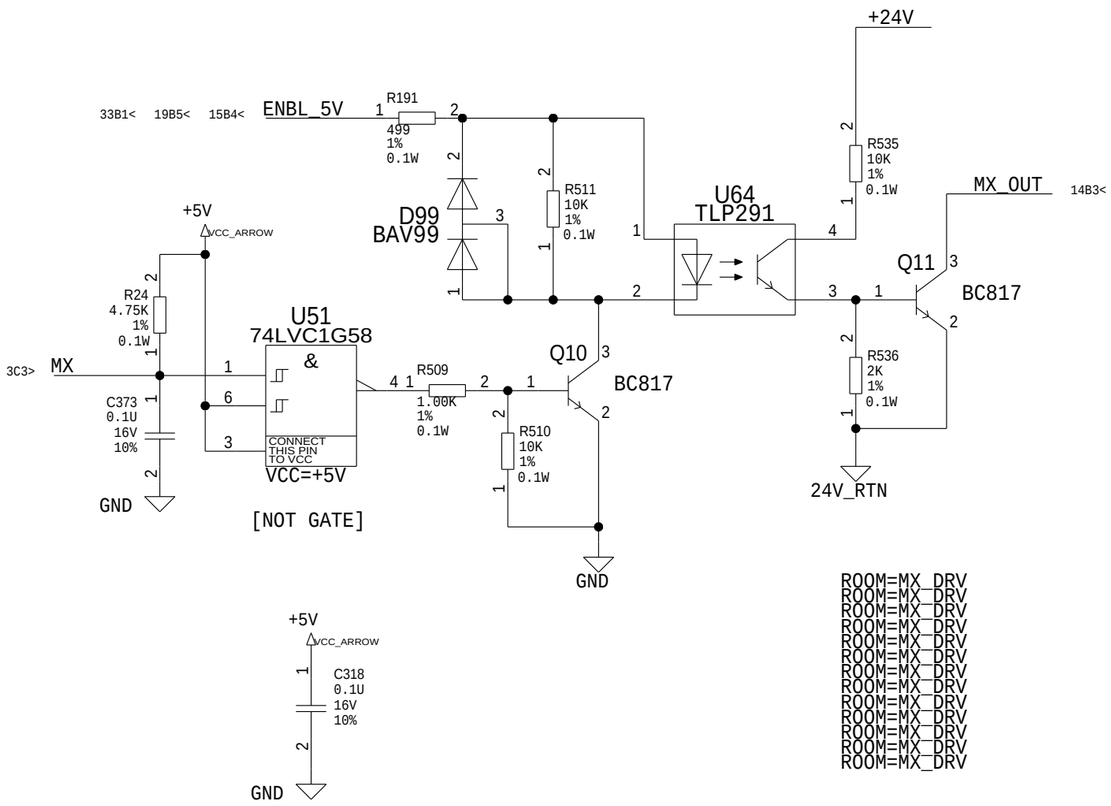

PX RELAY DRIVER

ROOM = PX_DRV

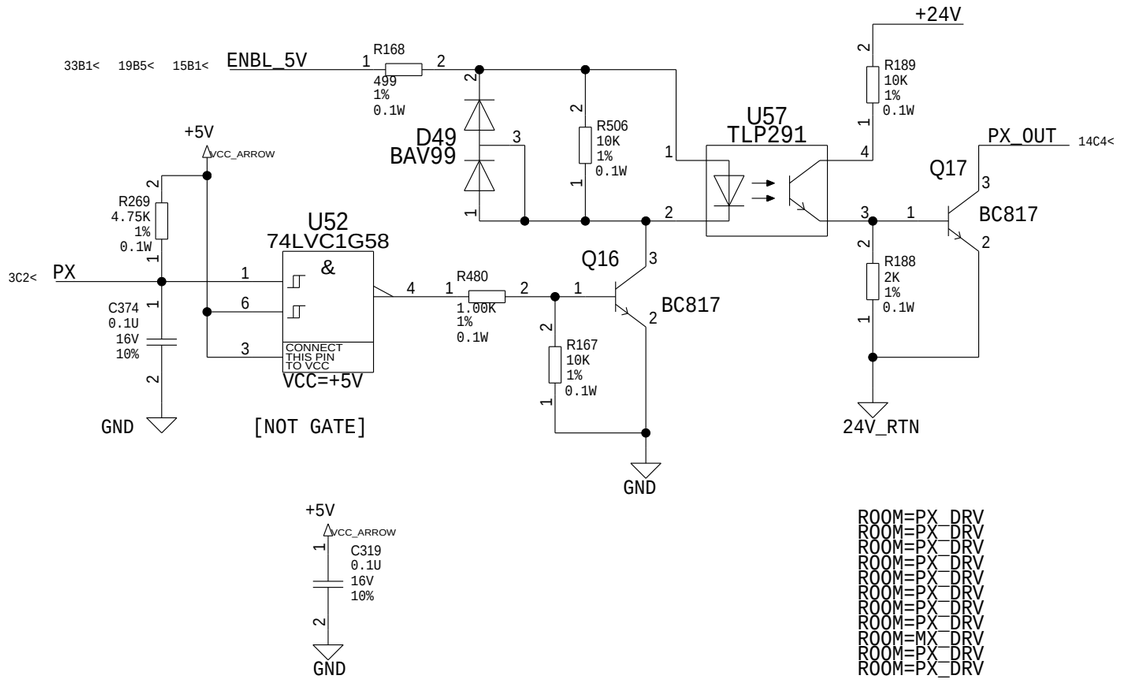

WARNING

THIS WORK AND THE INFORMATION IT CONTAINS ARE THE PROPERTY OF OTIS ELEVATOR COMPANY (OTIS). **IT IS DELIVERED** TO OTHERS ON THE EXPRESS CONDITION THAT IT WILL BE USED ONLY FOR, OR ON BEHALF OF, OTIS; THAT NEITHER IT NOR THE INFORMATION IT CONTAINS WILL BE REPRODUCED OR DISCLOSED, IN WHOLE OR IN PART, WITHOUT THE PRIOR WRITTEN CONSENT OF OTIS; AND THAT ON DEMAND IT AND ANY COPIES WILL BE PROMPTLY RETURNED TO OTIS.

UNPUBLISHED WORK © OTIS ELEVATOR COMPANY

ALL RIGHTS RESERVED.

DWG KAA26800ACP

OTIS ENGINEERING CENTER

CHANGWON, KOREA

CHANGES

2017-08-21 REVISED. SEE KAA26800ACP_CDOC.DOC FOR DETAILS (CN1037523) MILLETT S / MAGDA RF

OTIS United Technologies

HVPB
(High Voltage Power Board)
OVFR03A-406

DRAWN	S. MILLETT	ORIGINAL DATE	2017-01-06
CHK	W. HUANG		
APPD	R. MAGDA	SHEETS	
AUTH	CN897873	SHEET	15

DRAFTED IN ACCORDANCE WITH OTIS DOCUMENT 52847

A3

LINE REACTOR THERMAL SWITCH CIRCUIT

ROOM=THERM_IN

ROOM=THERM_IN
ROOM=THERM_IN
ROOM=THERM_IN
ROOM=THERM_IN
ROOM=THERM_IN
ROOM=THERM_IN
ROOM=THERM_IN
ROOM=THERM_IN
ROOM=THERM_IN
ROOM=THERM_IN
ROOM=THERM_IN

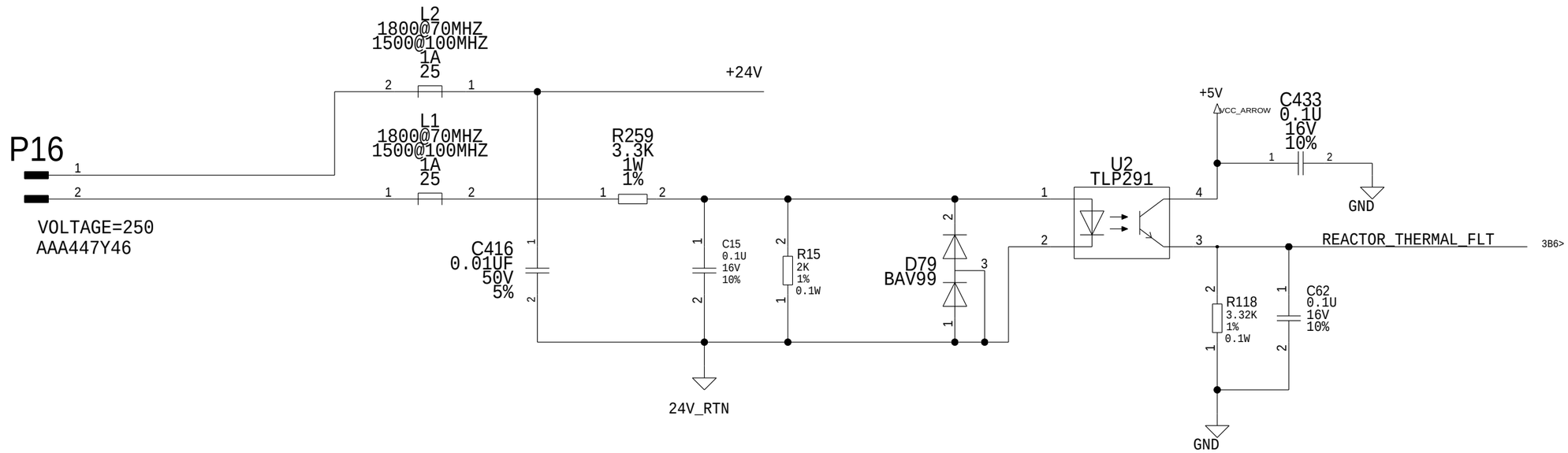

WARNING

THIS WORK AND THE INFORMATION IT CONTAINS ARE THE PROPERTY OF OTIS ELEVATOR COMPANY (OTIS). **IT IS DELIVERED** TO OTHERS ON THE EXPRESS CONDITION THAT IT WILL BE USED ONLY FOR, OR ON BEHALF OF, OTIS; THAT NEITHER IT NOR THE INFORMATION IT CONTAINS WILL BE REPRODUCED OR DISCLOSED, IN WHOLE OR IN PART, WITHOUT THE PRIOR WRITTEN CONSENT OF OTIS; AND THAT ON DEMAND IT AND ANY COPIES WILL BE PROMPTLY RETURNED TO OTIS.

UNPUBLISHED WORK © OTIS ELEVATOR COMPANY

ALL RIGHTS RESERVED.

DWG KAA26800ACP

OTIS ENGINEERING CENTER

CHANGWON, KOREA

CHANGES

2017-08-21 REVISED. SEE KAA26800ACP_CDOC.DOC FOR DETAILS (CN1037523) MILLETT S / MAGDA RF

OTIS
United Technologies

HVPB
(High Voltage Power Board)
OVFR03A-406

DRAWN	S. MILLETT	ORIGINAL DATE 2017-01-06
CHK	W. HUANG	
APPD	R. MAGDA	SHEETS
AUTH	CN897873	SHEET 16

DRAFTED IN ACCORDANCE WITH OTIS DOCUMENT 52847

CR-17 : @KAA26800ACP_LIB.KAA26800ACP_LIB(SCH_1):PAGE17

ROOM=FAN_CON ROOM=FAN_CON ROOM=FAN_CON ROOM=FAN_CON
ROOM=FAN_CON ROOM=FAN_CON ROOM=FAN_CON ROOM=FAN_CON
ROOM=FAN_CON ROOM=FAN_CON ROOM=FAN_CON ROOM=FAN_CON
ROOM=FAN_CON ROOM=FAN_CON ROOM=FAN_CON ROOM=FAN_CON
ROOM=FAN_CON ROOM=FAN_CON ROOM=FAN_CON ROOM=FAN_CON

A3

FAN CONTROL CIRCUIT

ROOM = FAN_CON

ROOM=FAN_CON
ROOM=FAN_CON
ROOM=FAN_CON
ROOM=FAN_CON
ROOM=FAN_CON
ROOM=FAN_CON
ROOM=FAN_CON
ROOM=FAN_CON
ROOM=FAN_CON
ROOM=FAN_CON
ROOM=FAN_CON
ROOM=FAN_CON

25B1< 24C1< 24A6< 33B2< 25B5<

LVP_SMPS

R275 20K 1% 0.1W
R286 20K 1% 0.1W
R294 20K 1% 0.1W
R299 20K 1% 0.1W
R302 20K 1% 0.1W

R527 560 1W 1%
R39 560 1W 1%
R288 560 1W 1%
R289 560 1W 1%

ALTERNATE = AAA601AW85

Q4 FQB5N50C

Z3 18V 0.250W BZX84C18

C200 10UF 35V 10%

C419 470PF 250V 5%

C179 0.22UF 250V 10%

R284 1M 1% 0.125W
R291 1M 1% 0.125W
R295 118K 0.125W 1%
R300 63.4K 0.125W 1%
R42 19.6K 0.1W 1%

FAN_RTN

LVP_SMPS_RTN

U12 LTC7138

VIN SW RUN ANODE SS VPRG1 VPRG2 VFB FBO GND ISET EP OVLO

L5 330UH 1.1A 20% 20%

D14 MBRS3201P 2W

DUMMY_P17_1
DUMMY_U12_11

C193 0.1U 16V 10%

ROOM=FAN_CON ROOM=FAN_CON ROOM=FAN_CON

R313 20K 1% 0.1W
R312 20K 1% 0.1W
R311 20K 1% 0.1W
R309 1.21K 1% 0.1W

C449 390PF 100V 5%

C45 33UF 100V 20%

FAN_OUT

P12-A AAA447Y46
P12-B AAA447Y46

JEDEC_TYPE=KAA_ACC_AAA447Y46
JEDEC_TYPE=KAA_ACC_AAA447Y46

C39 33UF 100V 20%
C146 0.1UF 100V 10%
C147 0.1UF 100V 10%
C145 33UF 100V 20%

NEAR CONNECTOR

FAN_RTN

17B6< 17D4< 17C1< 17D4< 17C6< 17C1< 17B6< 17C6<

VR2 VREG V+ +5V 0V NCP1117DT50 G

C200 10UF 35V 10%
C208 10U 10V 10%
C207 0.1U 16V 10%

FAN_5V 17C3< 17C6< 17D4<

R303 2K 1% 0.1W

FAN_2.5V

VR1 TL431AID REF

C181 1U 10V 10%
C192 0.1U 16V 10%

R310 3.32K 1% 0.1W

C43 10U 10V 10%
C42 10U 10V 10%

R61 6.34K 1% 0.1W

R49 6.34K 1% 0.1W

17C6< 17B6< 17D4<

FAN_RTN

U74 TSV911A

R60 6.34K 1% 0.1W

17C6< 17C3< FAN_5V
17C6< 17C1< 17B6< 17D4< FAN_RTN

C204 0.1U 16V 10%

FAN_5V 17C3< 17D4<

C205 0.1U 16V 10%

FAN_RTN 17B6< 17C1< 17D4<

+5V VCC_ARROW

R75 499 1% 0.1W
R76 10K 1% 0.1W

D30 BAV99

17D4< 17C6< 17C3< FAN_5V

R62 10K 1% 0.1W

U16 TLP291

U15 74LVC1G58

CONNECT THIS PIN TO VCC

VCC=FAN_5V
GND=LVP_SMPS_RTN

3C2< PWM_FAN

R318 20K 1% 0.1W

FAN_RTN 17B6< 17C1< 17C6< 17D4<

ASSEMBLY_SEC1=NO
ASSEMBLY_SEC2=NO
ASSEMBLY_SEC3=NO
ASSEMBLY_SEC4=NO

ROOM=FAN_CON
ROOM=FAN_CON
ROOM=FAN_CON
ROOM=FAN_CON
ROOM=FAN_CON
ROOM=FAN_CON
ROOM=FAN_CON
ROOM=FAN_CON
ROOM=FAN_CON
ROOM=FAN_CON
ROOM=FAN_CON

CR-18 : @KAA26800ACP_LIB,KAA26800ACP_LIB(SCH_1):PAGE18

A3

GATE DRIVE UVLO DETECTION LOGIC

ROOM=CNV_FLT
ROOM=CNV_FLT
ROOM=CNV_FLT
ROOM=CNV_FLT

[CONVERTER PART]

ROOM=CNV_FLT

29C1<> 27C1<> 28C1<> 29B1<> 27B1<> 28B1<> CNV_UVLO*

R343 2K 0.1W 1%

U24 74LVC1G57 ≥1

CONNECT THIS PIN TO GND

VCC=+5V

R119 2K 1% 0.1W

205 CNV GATE FLT

CNV_DEV_FLT 3B6>

C48 0.01U 50V 10%

C394 0.01U 50V 10%

C234 0.1U 16V 10%

+5V VCC_ARROW

GND

ROOM = CNV_FLT

ROOM=INV_FLT
ROOM=INV_FLT
ROOM=INV_FLT
ROOM=INV_FLT
ROOM=INV_FLT
ROOM=INV_FLT
ROOM=INV_FLT

[INVERTER PART]

30B1<> INV_UVLO_UH* R424 2K 0.1W 1%

30C1<> INV_UVLO_UL* R421 2K 0.1W 1%

31B1<> INV_UVLO_VH* R420 2K 0.1W 1%

31C1<> INV_UVLO_VL* R419 2K 0.1W 1%

32B1<> INV_UVLO_WH* R426 2K 0.1W 1%

32C1<> INV_UVLO_WL* R425 2K 0.1W 1%

C261 0.01U 50V 10%

C262 0.01U 50V 10%

C254 0.01U 50V 10%

C255 0.01U 50V 10%

C256 0.01U 50V 10%

C260 0.01U 50V 10%

GND

NAND U36 CD4048B

NOR U35 CD4048B

A B C D KA KB KC KD EXPAND E F G H

OUTPUT VDD VSS

+5V VCC_ARROW

C61 0.1U 16V 10%

GND

OUTPUT IS HIGH IF ANY GATE DRIVE IS IN UVLO
FOR NORMAL OPERATION 107 INV GATE FLT

U33 74LVC1G58 &

R422 2K 1% 0.1W

C257 0.01U 50V 10%

CONNECT THIS PIN TO GND

VCC=+5V

INV_UVLO_NAND 3B3>

C60 0.1U 16V 10%

C59 0.1U 16V 10%

OUTPUT IS HIGH IF ALL GATE DRIVES ARE IN UVLO
TO VERIFY GATE RELAY IS OPEN 117 INV PFAI FLT

U37 74LVC1G58 &

R427 2K 1% 0.1W

C263 0.01U 50V 10%

CONNECT THIS PIN TO GND

VCC=+5V

INV_UVLO_NOR 3B3>

ROOM=INV_FLT
ROOM=INV_FLT
ROOM=INV_FLT
ROOM=INV_FLT

ROOM=INV_FLT ROOM=INV_FLT
ROOM=INV_FLT ROOM=INV_FLT
ROOM=INV_FLT ROOM=INV_FLT
ROOM=INV_FLT ROOM=INV_FLT
ROOM=INV_FLT ROOM=INV_FLT

WARNING

THIS WORK AND THE INFORMATION IT CONTAINS ARE THE PROPERTY OF OTIS ELEVATOR COMPANY (OTIS). **IT IS DELIVERED** TO OTHERS ON THE EXPRESS CONDITION THAT IT WILL BE USED ONLY FOR, OR ON BEHALF OF, OTIS; THAT NEITHER IT NOR THE INFORMATION IT CONTAINS WILL BE REPRODUCED OR DISCLOSED, IN WHOLE OR IN PART, WITHOUT THE PRIOR WRITTEN CONSENT OF OTIS; AND THAT ON DEMAND IT AND ANY COPIES WILL BE PROMPTLY RETURNED TO OTIS.

UNPUBLISHED WORK © OTIS ELEVATOR COMPANY

ALL RIGHTS RESERVED.

DWG KAA26800ACP

OTIS ENGINEERING CENTER

CHANGWON, KOREA

CHANGES

2017-08-21 REVISED. SEE KAA26800ACP_CDOC.DOC FOR DETAILS (CN1037523) MILLETT S / MAGDA RF

OTIS United Technologies

HVPB
(High Voltage Power Board)
OVFR03A-406

DRAWN	S. MILLETT	ORIGINAL DATE	2017-01-06
CHK	W. HUANG		
APPD	R. MAGDA	SHEETS	
AUTH	CN897873	SHEET	18

DRAFTED IN ACCORDANCE WITH OTIS DOCUMENT 52847

A3

OUTPUT ENABLE SIGNAL

ROOM=OUT_ENB
ROOM=OUT_ENB
ROOM=OUT_ENB
ROOM=OUT_ENB
ROOM=OUT_ENB
ROOM=OUT_ENB
ROOM=OUT_ENB
ROOM=OUT_ENB
ROOM=OUT_ENB

ROOM=OUT_ENB

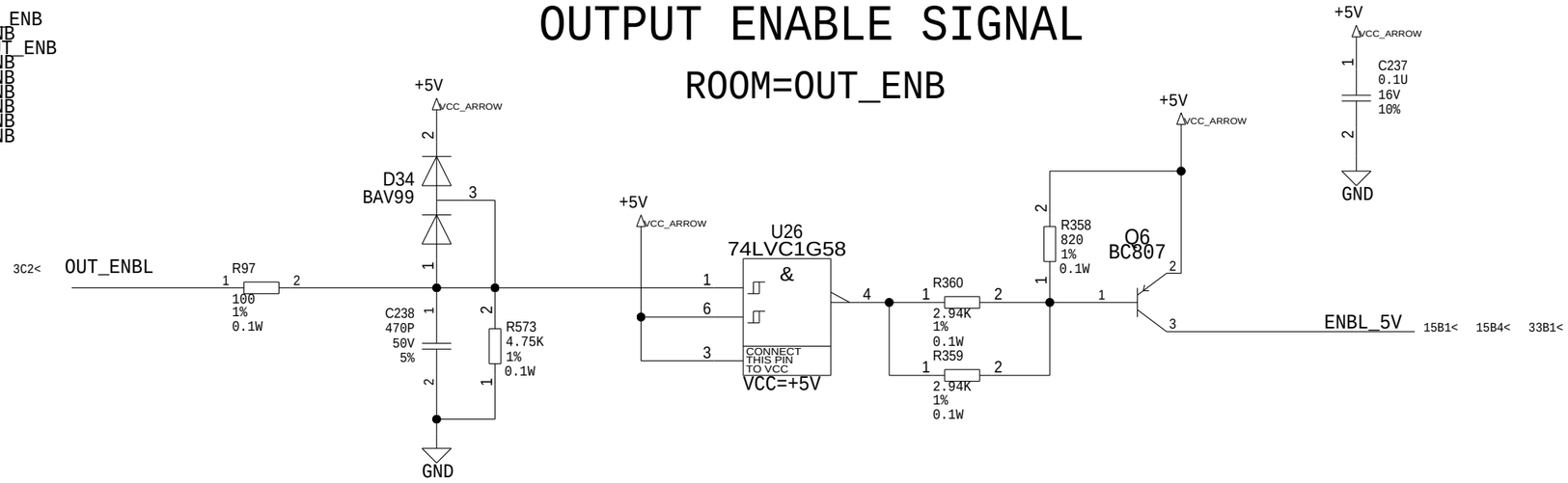

GATE DRIVE DESAT DETECTION

[CONVERTER PART]

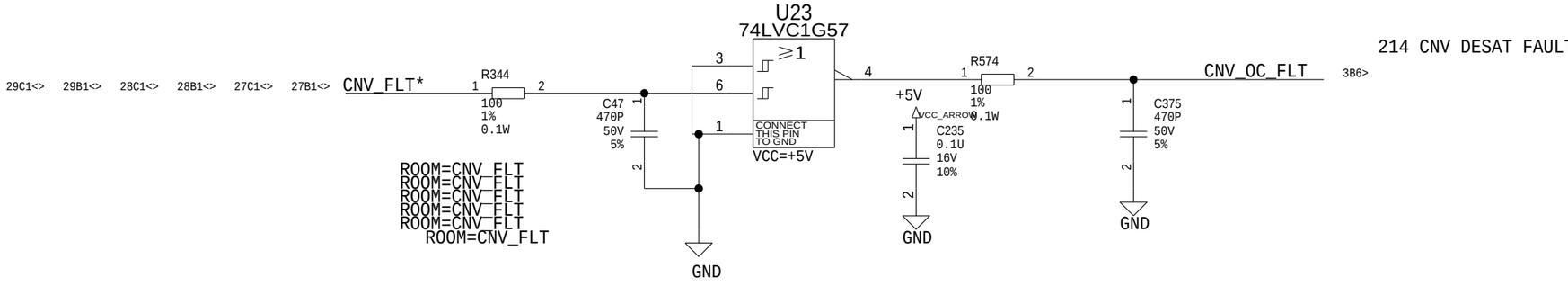

[INVERTER PART]

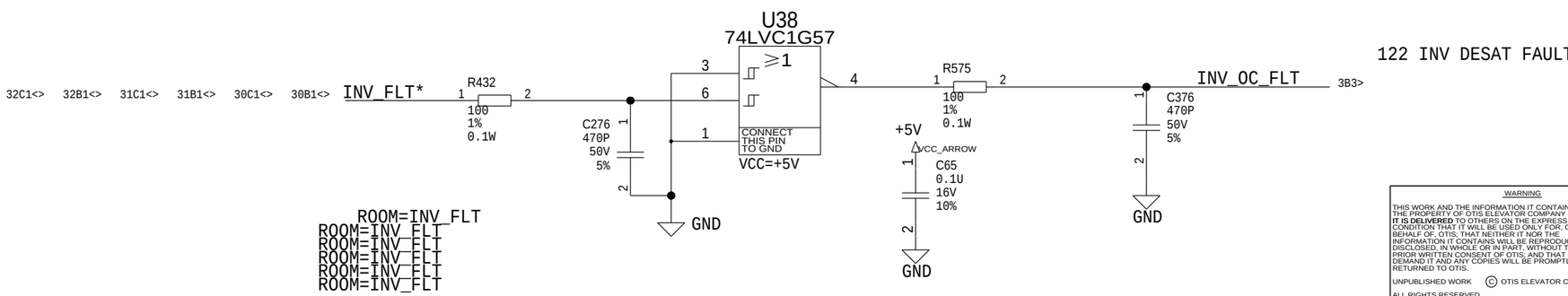

WARNING

THIS WORK AND THE INFORMATION IT CONTAINS ARE THE PROPERTY OF OTIS ELEVATOR COMPANY (OTIS). **IT IS DELIVERED** TO OTHERS ON THE EXPRESS CONDITION THAT IT WILL BE USED ONLY FOR, OR ON BEHALF OF, OTIS; THAT NEITHER IT NOR THE INFORMATION IT CONTAINS WILL BE REPRODUCED OR DISCLOSED, IN WHOLE OR IN PART, WITHOUT THE PRIOR WRITTEN CONSENT OF OTIS; AND THAT ON DEMAND IT AND ANY COPIES WILL BE PROMPTLY RETURNED TO OTIS.

UNPUBLISHED WORK © OTIS ELEVATOR COMPANY

ALL RIGHTS RESERVED.

DWG KAA26800ACP

OTIS ENGINEERING CENTER
CHANGWON, KOREA

CHANGES

2017-08-21 REVISED. SEE KAA26800ACP_CDOC.DOC FOR DETAILS (CN1037523) MILLETT S / MAGDA RF

HVPB
(High Voltage Power Board)
OVFR03A-406

DRAWN	S. MILLETT	ORIGINAL DATE	2017-01-06
CHK	W. HUANG		
APPD	R. MAGDA	SHEETS	
AUTH	CN897873	SHEET	19

DRAFTED IN ACCORDANCE WITH OTIS DOCUMENT 52847

CR-20 : @KAA26800ACP_LIB.KAA26800ACP_LIB(SCH_1):PAGE20

SAFETY RELAY CIRCUIT
[PER EN81-50]

A3

ROOM=SFC_RLY
ROOM=SFC_RLY
ROOM=SFC_RLY
ROOM=SFC_RLY
ROOM=SFC_RLY

ROOM=SFC_RLY

ROOM = SFC_RLY

[FROM GDCB]

SFC_IN 21C1<

P4
1
2 SFC_RTN

AAA447AP503
WAGO_734_132
MALE, 3.5MM

R564 909 1W 1%
R569 909 1W 1%
R566 909 1W 1%
R568 909 1W 1%
R563 909 1W 1%
R567 909 1W 1%

ALT0 = ZERO OHM JUMPERS
AAA232HF11

ALT1 = 1.21K OHM
AAA232HD578

D78
DF04S

C417
0.22UF
250V
10%

C144
10UF
250V
10%

REL1

ROOM=SFC_RLY
ROOM=SFC_RLY
ROOM=SFC_RLY
ROOM=SFC_RLY
ROOM=SFC_RLY

[TO SW RELAY]

P20
1
2 DUMMY_P20_1
3

AAA447Y47

L37
650@80MHZ
600@100MHZ
2.5A
25%

R570
0
MELF

L36
650@80MHZ
600@100MHZ
2.5A
25%

R257
0
MELF

[TO BRAKE MODULE]

WAGO_722_734

P102
1 SFC_2BRAKE
2 SFC_2BRAKE_RTN
3
4

BY1_BY2_NC_IN 21A1<

AAA447AP500

RT1
0.730
0.55A
PTC FUSE

SFC_2PTC

ALT_PN_NSAA=AAA226EP64
5.6UF

R256
0
--W
--%

REL2

ALT_PN_LVA=AAA613DG41

L28
1800@70MHZ
1500@100MHZ

L29
1800@70MHZ
1500@100MHZ
1A
25
+24V

1A
25

P100_MID

SFC_IN_MID

+30V_GATE_INV1

R258
0
0%
0W

L17
1800@70MHZ
1500@100MHZ
1A
25

[TO SW RLAY NC]
DBD_IN 3C2<

DBD_2RLY1

P15
MALE 2.5MM

[TO S & PL]

AAA447AP314
WAGO 733-332

L23
1800@70MHZ
1500@100MHZ
1A
25

L24
1800@70MHZ
1500@100MHZ
1A
25

P100
P100_1
P100_2

AAA447AP53

[FROM SMPS]

+30V_GATE 33B6<
+30V_GATE_RTN 33C6<

C422
100PF
50V
5%

L6
51UH
1A
30%

[TO CNV SMPS]

+30V_GATE_CNV_RTN 35B1< 35C2<
+30V_GATE_CNV 35A1<

ROOM=CNV_GATE_PWR

R249
0
0%
0W

R254
0

ZERO OHM JUMPERS (MELF)
SLOT UNDER

DBD_2RLY2

R250
0

R255
0
0%
0W

L7
51UH
1A
30%

[TO INV SMPS]

+30V_GATE_INV_RTN 34B1< 34D1<
+30V_GATE_INV 34A1<

+30V_GATE_INV_RTN1

ROOM=INV_GATE_PWR

R248
0
0%
0W

C423
100PF
50V
5%

ROOM=SFC_RLY
ROOM=SFC_RLY
ROOM=SFC_RLY
ROOM=SFC_RLY
ROOM=SFC_RLY
ROOM=SFC_RLY
ROOM=SFC_RLY
ROOM=SFC_RLY
ROOM=SFC_RLY

WARNING
THIS WORK AND THE INFORMATION IT CONTAINS ARE THE PROPERTY OF OTIS ELEVATOR COMPANY (OTIS). IT IS DELIVERED TO OTHERS ON THE EXPRESS CONDITION THAT IT WILL BE USED ONLY FOR, OR ON BEHALF OF, OTIS; THAT NEITHER IT NOR THE INFORMATION IT CONTAINS WILL BE REPRODUCED OR DISCLOSED, IN WHOLE OR IN PART, WITHOUT THE PRIOR WRITTEN CONSENT OF OTIS; AND THAT ON DEMAND IT AND ANY COPIES WILL BE PROMPTLY RETURNED TO OTIS.
UNPUBLISHED WORK © OTIS ELEVATOR COMPANY
ALL RIGHTS RESERVED.

DWG KAA26800ACP

OTIS ENGINEERING CENTER
CHANGWON, KOREA

CHANGES
2017-08-21 REVISED. SEE KAA26800ACP_CDOC.DOC FOR DETAILS (CN1037523) MILLETT S / MAGDA RF

OTIS
United Technologies

HVPB
(High Voltage Power Board)
OVFR03A-406

DRAWN	S. MILLETT	ORIGINAL DATE 2017-01-06
CHK	W. HUANG	
APPD	R. MAGDA	SHEETS
AUTH	CN897873	SHEET 20

DRAFTED IN ACCORDANCE WITH OTIS DOCUMENT 52847

CR-21 : @KAA26800ACP_LIB,KAA26800ACP_LIB(SCH_1):PAGE21

A3

ROOM=EN81_SFC_IN_MON
ROOM=EN81_SFC_IN_MON
ROOM=EN81_SFC_IN_MON
ROOM=EN81_SFC_IN_MON
ROOM=EN81_SFC_IN_MON
ROOM=EN81_SFC_IN_MON

SAFETY RELAY MONITORING CIRCUIT

ROOM = EN81_SFC_IN_MON

ROOM=EN81_SFC_IN_MON
ROOM=EN81_SFC_IN_MON
ROOM=EN81_SFC_IN_MON
ROOM=EN81_SFC_IN_MON
ROOM=EN81_SFC_IN_MON
ROOM=EN81_SFC_IN_MON

[MONITORING BY1_BY2_NC]

20D2< BY1_BY2_NC_IN

L13
1800@70MHZ
1500@100MHZ

CLOSE TO P102 CONNECTOR

MOVE CLOSER TO U65

L22
1800@70MHZ
1500@100MHZ

24V_RTN

R526
3.3K
1W
1%

R202
3.3K
1W
1%

C114
0.1U
16V
10%

R529
2K
1%
0.1W

D101
BAV99

U65
TLP291

+5V
VCC_ARROW

R192
3.32K
1%
0.1W

C345
0.1U
16V

GND

U63
74LVC1G58
&
CONNECT THIS PIN TO GND
VCC=+5V

[TO GDCB2]

4 BY1_BY2_NC 3B3>

[HIGH -> BY1, BY2 PICKED]

+5V
VCC_ARROW
C343
0.1U
16V
GND

PER EN81-50

ROOM=EN81_SFC_IN_MON
ROOM=EN81_SFC_IN_MON

20B2< SFC_IN

R565
6.19K
1%
1W

R562
6.19K
1%
1W

R253
6.19K
1%
1W

R252
6.19K
1%
1W

ASSEMBLY_SEC3=ALT
ASSEMBLY_SEC3=ALT
ASSEMBLY_SEC3=ALT
ASSEMBLY_SEC3=ALT

D76
BAV99
D77
BAV99

SFC_RTN

Z46
22V
BZX84C22

C138
10UF
50V
10%

C370
1UF
50V
10%

ASSEMBLY_SEC1=NO
ASSEMBLY_SEC2=NO
ASSEMBLY_SEC3=NO
ASSEMBLY_SEC4=NO

R561
6.49K
0.1W
1%

R246
2K
1%
0.1W

R245
820
1%
0.1W

R560
56.2K
1%
0.1W
ASSEMBLY_SEC3=ALT

R242
39.2K
1%
0.1W

C369
0.1UF
50V
10%

0.3W
6.8V
2%
BZX84B6V8
Z36

ASSEMBLY_SEC3=ALT

R244
2.94K
1%
0.1W

U72
AP331A
VCOMP
X
Y
X>Y
VCC
GND

U73
PS2561D

+5V
VCC_ARROW

[NAND GATE]

U34
74LVC1G58
&
CONNECT THIS PIN TO VCC
VCC=+5V

4 SFC_OK_2BUFFER* 22B3<

C258
0.1U
16V
10%

R423
10K
1%
0.1W

C259
0.1U
16V
10%

GND

ROOM=EN81_SFC_IN_MON
ROOM=EN81_SFC_IN_MON

ROOM=EN81_SFC_IN_MON
ROOM=EN81_SFC_IN_MON
ROOM=EN81_SFC_IN_MON
ROOM=EN81_SFC_IN_MON
ROOM=EN81_SFC_IN_MON
ROOM=EN81_SFC_IN_MON
ROOM=EN81_SFC_IN_MON
ROOM=EN81_SFC_IN_MON
ROOM=EN81_SFC_IN_MON
ROOM=EN81_SFC_IN_MON
ROOM=EN81_SFC_IN_MON
ROOM=EN81_SFC_IN_MON
ROOM=EN81_SFC_IN_MON
ROOM=EN81_SFC_IN_MON
ROOM=EN81_SFC_IN_MON
ROOM=EN81_SFC_IN_MON
ROOM=EN81_SFC_IN_MON
ROOM=EN81_SFC_IN_MON
ROOM=EN81_SFC_IN_MON

WARNING

THIS WORK AND THE INFORMATION IT CONTAINS ARE THE PROPERTY OF OTIS ELEVATOR COMPANY (OTIS). **IT IS DELIVERED** TO OTHERS ON THE EXPRESS CONDITION THAT IT WILL BE USED ONLY FOR, OR ON BEHALF OF, OTIS; THAT NEITHER IT NOR THE INFORMATION IT CONTAINS WILL BE REPRODUCED OR DISCLOSED, IN WHOLE OR IN PART, WITHOUT THE PRIOR WRITTEN CONSENT OF OTIS; AND THAT ON DEMAND IT AND ANY COPIES WILL BE PROMPTLY RETURNED TO OTIS.

UNPUBLISHED WORK © OTIS ELEVATOR COMPANY ALL RIGHTS RESERVED.

DWG KAA26800ACP

OTIS ENGINEERING CENTER
CHANGWON, KOREA

CHANGES

2017-08-21 REVISED. SEE KAA26800ACP_CDOC.DOC FOR DETAILS (CN1037523) MILLETT S / MAGDA RF

OTIS
United Technologies

HVPB
(High Voltage Power Board)
OVFR03A-406

DRAWN	S. MILLETT	ORIGINAL DATE	2017-01-06
CHK	W. HUANG		
APPD	R. MAGDA	SHEETS	
AUTH	CN897873	SHEET	21

DRAFTED IN ACCORDANCE WITH OTIS DOCUMENT 52847

CR-22 : @KAA26800ACP_LIB.KAA26800ACP_LIB(SCH_1):PAGE22

A3

PWM SIGNAL BUFFER OF INVERTER

+5V
VCC_ARROW
C55
0.1U
16V
10%
GND

[INVERTER PWM BUFFER]

ROOM=INV_PWM_BUF
ROOM=INV_PWM_BUF
ROOM=INV_PWM_BUF
ROOM=INV_PWM_BUF
ROOM=INV_PWM_BUF
ROOM=INV_PWM_BUF

ACCORDING TO EN81-50

SFC_OK_2BUFFER* 21C6>

ROOM = INV_PWM_BUF

U31
74VHC541
&
EN
VCC
GND

U32
74VHC541
&
EN
VCC
GND

C249
0.1U
16V
10%

R115 3.32K 1% 0.1W
R409 3.32K 1% 0.1W
R408 3.32K 1% 0.1W

3B2< PWM_U+
3B2< PWM_U-
3B2< PWM_V+
3B2< PWM_V-
3B2< PWM_W+
3B2< PWM_W-

18 PWM_U_H 23B2< 30A2<
17 PWM_U_L 23C2< 30C1<
16 PWM_V_H 23C2< 31A2<
15 PWM_V_L 23D2< 31C2<
14 PWM_W_H 23B3< 32A2<
13 PWM_W_L 23C3< 32C2<
12 PWM_CHK_OUT 23C3<
11 DUMMY_P22_4

3C3> PWM_CHK_DRV

ASSEMBLY_SEC1=NO
ASSEMBLY_SEC2=NO
ASSEMBLY_SEC3=NO
ASSEMBLY_SEC4=NO
R594 3.32K 1% 0.1W

U5
74LVC1G58
&
CONNECT THIS PIN TO GND
VCC=+5V

R404 107 0.1W 1%

3B6> PWM_CHK_LOOP

R405 3.32K 1% 0.1W
R406 3.32K 1% 0.1W
R407 3.32K 1% 0.1W
R403 3.32K 1% 0.1W

R383 3.32K 1% 0.1W
R384 3.32K 1% 0.1W
R385 3.32K 1% 0.1W
R386 3.32K 1% 0.1W
R387 3.32K 1% 0.1W
R388 3.32K 1% 0.1W
R389 3.32K 1% 0.1W
R410 3.32K 1% 0.1W

ROOM=INV_PWM_BUF
ROOM=INV_PWM_BUF
ROOM=INV_PWM_BUF
ROOM=INV_PWM_BUF
ROOM=INV_PWM_BUF
ROOM=INV_PWM_BUF
ROOM=INV_PWM_BUF
ROOM=INV_PWM_BUF

ROOM=INV_PWM_BUF
ROOM=INV_PWM_BUF

ROOM=INV_PWM_BUF
ROOM=INV_PWM_BUF
ROOM=INV_PWM_BUF
ROOM=INV_PWM_BUF
ROOM=INV_PWM_BUF
ROOM=INV_PWM_BUF
ROOM=INV_PWM_BUF

WARNING

THIS WORK AND THE INFORMATION IT CONTAINS ARE THE PROPERTY OF OTIS ELEVATOR COMPANY (OTIS). **IT IS DELIVERED** TO OTHERS ON THE EXPRESS CONDITION THAT IT WILL BE USED ONLY FOR, OR ON BEHALF OF, OTIS; THAT NEITHER IT NOR THE INFORMATION IT CONTAINS WILL BE REPRODUCED OR DISCLOSED, IN WHOLE OR IN PART, WITHOUT THE PRIOR WRITTEN CONSENT OF OTIS; AND THAT ON DEMAND IT AND ANY COPIES WILL BE PROMPTLY RETURNED TO OTIS.

UNPUBLISHED WORK © OTIS ELEVATOR COMPANY

ALL RIGHTS RESERVED.

DWG KAA26800ACP

OTIS ENGINEERING CENTER
CHANGWON, KOREA

CHANGES

2017-08-21 REVISED. SEE KAA26800ACP_CDOC.DOC FOR DETAILS (CN1037523) MILLETT S / MAGDA RF

OTIS
United Technologies

HVPB
(High Voltage Power Board)
OVFR03A-406

DRAWN	S. MILLETT	ORIGINAL DATE	2017-01-06
CHK	W. HUANG		
APPD	R. MAGDA	SHEETS	
AUTH	CN897873	SHEET	22

DRAFTED IN ACCORDANCE WITH OTIS DOCUMENT 52847

A3

PWM SIGNAL MONITORING CIRCUIT

ROOM=PWM_MON

ACCORDING TO EN81-50

[TO MONITORING CIRCUIT]
[TO GDCB2 SIDE]

+5V
VCC_ARROW
R379
3.32K
1%
0.1W
C243
0.1U
16V
10%
R106
499
1%
0.1W
R107
10K
1%
0.1W
U29
PS2561D
R105
100
1%
0.1W
R369
3.32K
1%
0.1W
C242
470P
50V
5%
PWM_EXISTS
3B4<
GND

Q15
BC807
30A2<
22B6<>
PWM_U_H
R382
4.75K
1%
0.1W

Q13
BC807
22C6<>
32A2<
PWM_W_H
R380
4.75K
1%
0.1W

Q7
BC807
30C1<
22C6<>
PWM_U_L
R372
4.75K
1%
0.1W

Q12
BC807
22C6<>
32C2<
PWM_W_L
R378
4.75K
1%
0.1W

Q14
BC807
31A2<
22C6<>
PWM_V_H
R381
4.75K
1%
0.1W

Q9
BC807
22C6<>
PWM_CHK_OUT
R370
4.75K
1%
0.1W

Q8
BC807
31C2<
22C6<>
PWM_V_L
R371
4.75K
1%
0.1W

+5V
VCC_ARROW
C244
0.1U
16V
10%
GND

ROOM=PWM_MON

WARNING
THIS WORK AND THE INFORMATION IT CONTAINS ARE THE PROPERTY OF OTIS ELEVATOR COMPANY (OTIS). IT IS DELIVERED TO OTHERS ON THE EXPRESS CONDITION THAT IT WILL BE USED ONLY FOR, OR ON BEHALF OF, OTIS; THAT NEITHER IT NOR THE INFORMATION IT CONTAINS WILL BE REPRODUCED OR DISCLOSED, IN WHOLE OR IN PART, WITHOUT THE PRIOR WRITTEN CONSENT OF OTIS; AND THAT ON DEMAND IT AND ANY COPIES WILL BE PROMPTLY RETURNED TO OTIS.
UNPUBLISHED WORK © OTIS ELEVATOR COMPANY
ALL RIGHTS RESERVED.

DWG KAA26800ACP

OTIS ENGINEERING CENTER
CHANGWON, KOREA

CHANGES
2017-08-21 REVISED. SEE KAA26800ACP_CDOC.DOC FOR DETAILS (CN1037523) MILLETT S / MAGDA RF

OTIS
United Technologies

HVPB
(High Voltage Power Board)
OVFR03A-406

DRAWN	S. MILLETT	ORIGINAL DATE	2017-01-06
CHK	W. HUANG		
APPD	R. MAGDA	SHEETS	
AUTH	CN897873	SHEET	23

DRAFTED IN ACCORDANCE WITH OTIS DOCUMENT 52847

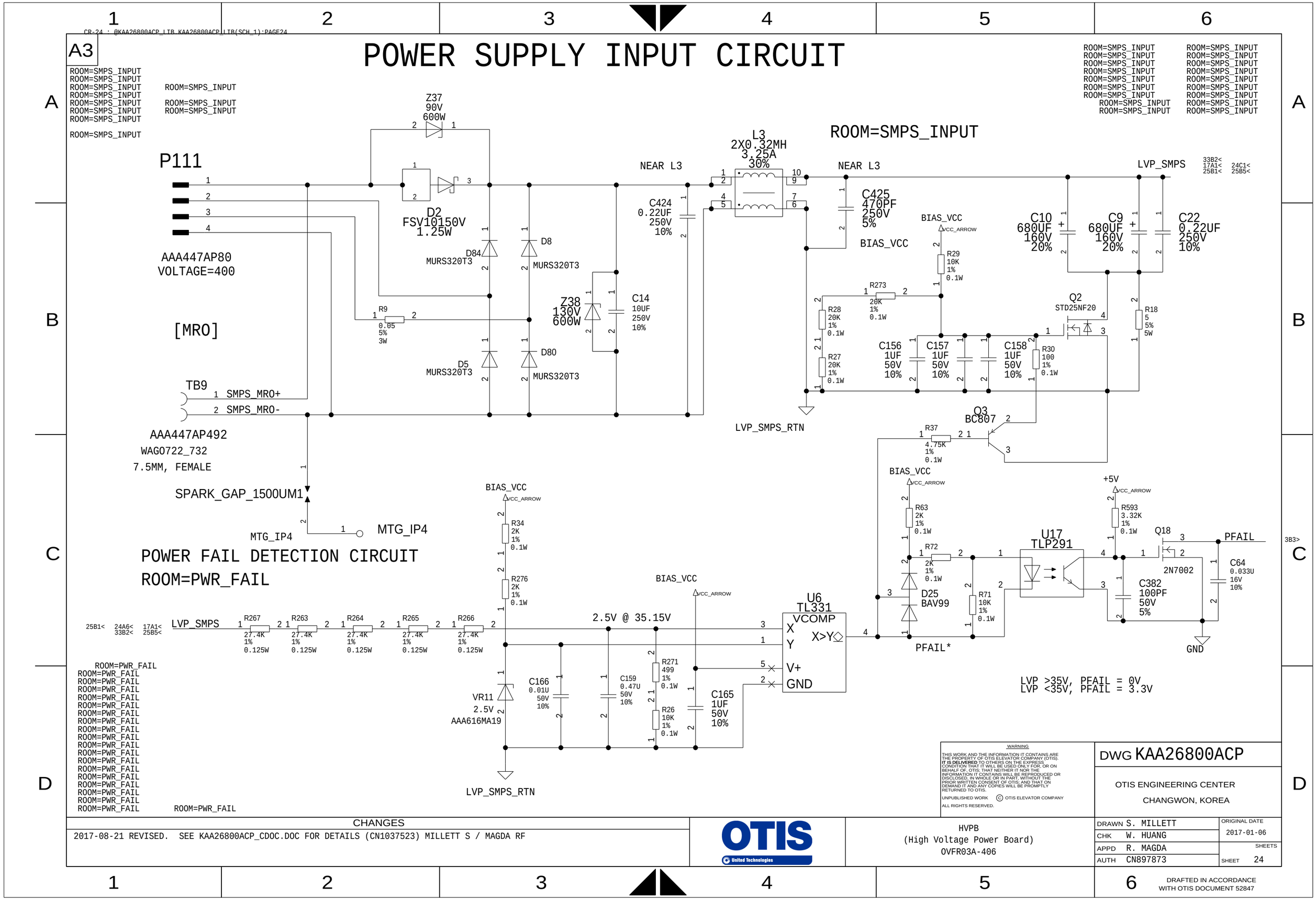

WARNING

THIS WORK AND THE INFORMATION IT CONTAINS ARE THE PROPERTY OF OTIS ELEVATOR COMPANY (OTIS). **IT IS DELIVERED** TO OTHERS ON THE EXPRESS CONDITION THAT IT WILL BE USED ONLY FOR, OR ON BEHALF OF, OTIS; THAT NEITHER IT NOR THE INFORMATION IT CONTAINS WILL BE REPRODUCED OR DISCLOSED, IN WHOLE OR IN PART, WITHOUT THE PRIOR WRITTEN CONSENT OF OTIS; AND THAT ON DEMAND IT AND ANY COPIES WILL BE PROMPTLY RETURNED TO OTIS.

UNPUBLISHED WORK © OTIS ELEVATOR COMPANY
ALL RIGHTS RESERVED.

DWG KAA26800ACP

OTIS ENGINEERING CENTER
CHANGWON, KOREA

CHANGES

2017-08-21 REVISED. SEE KAA26800ACP_CDOC.DOC FOR DETAILS (CN1037523) MILLETT S / MAGDA RF

OTIS United Technologies

HVPB
(High Voltage Power Board)
OVFR03A-406

DRAWN	S. MILLETT	ORIGINAL DATE	2017-01-06
CHK	W. HUANG		
APPD	R. MAGDA	SHEETS	
AUTH	CN897873	SHEET	24

DRAFTED IN ACCORDANCE WITH OTIS DOCUMENT 52847

CR-25 : @KAA26800ACP_LIB,KAA26800ACP_LIB(SCH_1):PAGE25

MAIN SMPS

ROOM=MAIN_SMPS

ROOM=MAIN_SMPS ROOM=MAIN_SMPS
ROOM=MAIN_SMPS ROOM=MAIN_SMPS
ROOM=MAIN_SMPS ROOM=MAIN_SMPS
ROOM=MAIN_SMPS ROOM=MAIN_SMPS
ROOM=MAIN_SMPS ROOM=MAIN_SMPS
ROOM=MAIN_SMPS ROOM=MAIN_SMPS
ROOM=MAIN_SMPS ROOM=MAIN_SMPS
ROOM=MAIN_SMPS ROOM=MAIN_SMPS
ROOM=MAIN_SMPS ROOM=MAIN_SMPS

ROOM=MAIN_SMPS

R283 13 1% 0.5W
C169 680PF 100V 5%
D10 FSV20100V 0.95W
25B6< 5V_PS
C461 100PF 50V 5%
C460 100PF 50V 5%
C38 470UF 6.3V 20%
C44 470UF 6.3V 20%
L14 0.47UH 5A 30% 30%
R591 1.82 0.25W 1%
C426 0.01UF 50V 5%
C377 120UF 10V 20%
C188 0.01UF 50V 5%
C197 10U 10V 10%
C210 1U 10V 10%
C203 0.1U 16V 10%
ASSEMBLY_SEC1=NO
ASSEMBLY_SEC2=NO
ASSEMBLY_SEC3=NO
ASSEMBLY_SEC4=NO
GND
R308 100 1% 0.1W
+5V
R44 4.75K 1% 0.1W
R56 100 1% 0.1W
R53 10K 1% 0.1W
R52 3.32K 1% 0.1W
C175 22P 50V 5%
C34 22P 50V 5%
C172 22P 50V 5%
C36 0.1U 16V 10%
R301 10K 1% 0.1W
R297 2.49K 1% 0.1W
R298 10K 1% 0.1W
C35 1U 10V 10%
D15 BAV99
U4 PS2561D
U14 TLV431B
ADJ
[1.24V]
24C1< 24A6< 33B2< 17A1< 25B5< LVP_SMPS
C13 0.22UF 250V 10%
C12 0.22UF 250V 10%
NEAR TRANSFORMER
LVP_SMPS_RTN
R20 200K 1% 0.125W
R21 200K 1% 0.125W
R578 43 0.25W 1%
C429 470PF 250V 5%
D81 0.4W MMSD103T1G
25B5< BIAS_PS
D6 0.4W MMSD103T1G
BIAS_VCC
VCC_ARROW
D104 BAV99
R262 10 1% 0.1W
Z47 BZX84C27 27V 0.35W 5%
C25 10UF 35V 10%
C150 10UF 35V 10%
C24 1UF 50V 10%
C371 0.1UF 50V 10%
C372 10UF 50V 10%
C153 220PF 50V 5%
R19 33.2K 1% 0.1W
C20 100PF 50V 5%
100PF CLOSE TO CS PIN & GND
U1 LM5021
PWM
VIN
RT
SYNC
COMP
CS
OUT
SS
VCC
GND
R14 20 1% 0.125W
Q1 STD25NF20
C434 100PF 50V 5%
R274 63.4K 0.125W 1%
R261 1.00K 1% 0.1W
C23 2.2U 16V 10%
C149 0.1U 16V 10%
C21 0.033U 16V 10%
R11 0.15 0.75W 1%
R17 0.15 0.75W 1%
R10 27 5% 0.75W
C428 220PF 250V 5%
24V_RTN_PS
25B6< 25C6< 26B1<
C11 1500PF 250VAC 10%
C421 220PF 250V 5%
C465 1500PF 250VAC 10%
C420 220PF 250V 5%
GND
LVP_SMPS_RTN
ENC_PS_RTN
25B6< 26B3<
ASSEMBLY_SEC1=NO
ASSEMBLY_SEC2=NO
ASSEMBLY_SEC3=NO
ASSEMBLY_SEC4=NO
TR1
SUMIDA_545_90_100_00
24V_PS 26A1<
W2
24V_RTN_PS 25A6> 25C6> 26B1<
5V_PS 25A1<
W3
GND
ENC_PS 26B3<
W4
ENC_PS_RTN 25A6> 26B3<
25C5< DRAIN
W1a/b/c
24C1< 24A6< 33B2< 17A1< 25B1< LVP_SMPS
25C1< BIAS_PS
W5
C427 680PF 100V 5%
C148 0.1UF 100V 10%
R2 30K 5% 0.75W
R1 30K 5% 0.75W
LVP_SMPS_RTN
D1 1.19W RS1G
25B5< DRAIN
MTG_IP1
IP2
R8 0 0% 0W
R3 0 0% 0W
SPARK_GAP1
GND
24V_RTN_PS
25A6> 25B6< 26B1<

ROOM=MAIN_SMPS
ROOM=MAIN_SMPS ROOM=MAIN_SMPS ROOM=MAIN_SMPS
ROOM=MAIN_SMPS ROOM=MAIN_SMPS
ROOM=MAIN_SMPS ROOM=MAIN_SMPS ROOM=MAIN_SMPS
ROOM=MAIN_SMPS ROOM=MAIN_SMPS
ROOM=MAIN_SMPS ROOM=MAIN_SMPS ROOM=MAIN_SMPS ROOM=MAIN_SMPS
ROOM=MAIN_SMPS ROOM=MAIN_SMPS ROOM=MAIN_SMPS ROOM=MAIN_SMPS
ROOM=MAIN_SMPS ROOM=MAIN_SMPS ROOM=MAIN_SMPS ROOM=MAIN_SMPS
ROOM=MAIN_SMPS ROOM=MAIN_SMPS ROOM=MAIN_SMPS ROOM=MAIN_SMPS
ROOM=MAIN_SMPS ROOM=MAIN_SMPS ROOM=MAIN_SMPS ROOM=MAIN_SMPS

ROOM=MAIN_SMPS ROOM=MAIN_SMPS
ROOM=MAIN_SMPS ROOM=MAIN_SMPS
ROOM=MAIN_SMPS ROOM=MAIN_SMPS
ROOM=MAIN_SMPS ROOM=MAIN_SMPS
ROOM=MAIN_SMPS ROOM=MAIN_SMPS
ROOM=MAIN_SMPS ROOM=MAIN_SMPS
ROOM=MAIN_SMPS ROOM=MAIN_SMPS
ROOM=MAIN_SMPS ROOM=MAIN_SMPS
ROOM=MAIN_SMPS ROOM=MAIN_SMPS

WARNING
THIS WORK AND THE INFORMATION IT CONTAINS ARE THE PROPERTY OF OTIS ELEVATOR COMPANY (OTIS). **IT IS DELIVERED** TO OTHERS ON THE EXPRESS CONDITION THAT IT WILL BE USED ONLY FOR, OR ON BEHALF OF, OTIS, THAT NEITHER IT NOR THE INFORMATION IT CONTAINS WILL BE REPRODUCED OR DISCLOSED, IN WHOLE OR IN PART, WITHOUT THE PRIOR WRITTEN CONSENT OF OTIS, AND THAT ON DEMAND IT AND ANY COPIES WILL BE PROMPTLY RETURNED TO OTIS.
UNPUBLISHED WORK © OTIS ELEVATOR COMPANY
ALL RIGHTS RESERVED.

DWG KAA26800ACP

OTIS ENGINEERING CENTER
CHANGWON, KOREA

CHANGES

2017-08-21 REVISED. SEE KAA26800ACP_CDOC.DOC FOR DETAILS (CN1037523) MILLETT S / MAGDA RF

OTIS United Technologies

HVPB
(High Voltage Power Board)
OVFR03A-406

DRAWN	S. MILLETT	ORIGINAL DATE	2017-01-06
CHK	W. HUANG		
APPD	R. MAGDA	SHEETS	
AUTH	CN897873	SHEET	25

DRAFTED IN ACCORDANCE WITH OTIS DOCUMENT 52847

CR-26 : @KAA26800ACP_LIB,KAA26800ACP_LIB(SCH_1):PAGE26

A3

MAIN SMPS SECONDARY SIDE

+24V I/O

C430 220PF 500V 5%

D4 1.9W ES3G

R579 180 1W 1%

R319 180 1W 1%

L27 51UH 1A 30%

ROOM=+24V_IO

25B6< 24V_PS

C164 0.1UF 50V 10%

C29 220UF 50V 20%

R571 10K 5% 0.75W

R572 10K 5% 0.75W

C432 10UF 50V 10%

C167 10UF 50V 10%

C162 1UF 50V 10%

+24V

25B6<

25A6> 25B6< 25C6< 24V_RTN_PS

24V_RTN

ROOM=+24V_IO
ROOM=+24V_IO
ROOM=+24V_IO
ROOM=+24V_IO
ROOM=+24V_IO
ROOM=+24V_IO

ENC POWER

ROOM=ENC_PWR

C431 220PF 500V 5%

R580 82 1% 1W

D11 1.19W RS1G

VR3 VREG +15V V+ 0V 7815_D2PAK

C37 47UF 35V 20%

C176 0.1UF 50V 10%

C209 0.1UF 50V 10%

C212 10UF 35V 10%

L30 1800@70MHZ 1500@100MHZ 1A 25

L31 1800@70MHZ 1500@100MHZ 1A 25

C211 10UF 35V 10%

25B6< ENC_PS

+15V_ENC 3C3<

25B6< 25A6> ENC_PS_RTN

ENC_RTN 3C3<

ROOM=ENC_PWR
ROOM=ENC_PWR
ROOM=ENC_PWR
ROOM=ENC_PWR
ROOM=ENC_PWR
ROOM=ENC_PWR
ROOM=ENC_PWR
ROOM=ENC_PWR
ROOM=ENC_PWR

-5V POWER

ROOM=-5V_PWR

C317 1U 10V 10%

C87 10U 10V 10%

C86 0.1U 16V 10%

C447 0.01UF 50V 5%

+5V

U50 TPS62120 V//V

VIN EN GND SW FB VOUT SGND PG

L8 22UH 0.75A

DUMMY_P26_1

GND

R157 200K 1% 0.125W

R469 200K 1% 0.125W

R470 30.1K 1% 0.1W

R472 82.5K 0.125W 1%

C306 22P 50V 5%

C448 0.01UF 50V 5%

C85 0.1U 16V 10%

C315 1U 10V 10%

C316 10U 10V 10%

D43 MBR0520L 0.2W

GND

-5V

VCC_ARROW -5V

ROOM=-5V_PWR
ROOM=-5V_PWR
ROOM=-5V_PWR
ROOM=-5V_PWR
ROOM=-5V_PWR
ROOM=-5V_PWR
ROOM=-5V_PWR
ROOM=-5V_PWR
ROOM=-5V_PWR
ROOM=-5V_PWR
ROOM=-5V_PWR
ROOM=-5V_PWR

WARNING

THIS WORK AND THE INFORMATION IT CONTAINS ARE THE PROPERTY OF OTIS ELEVATOR COMPANY (OTIS). **IT IS DELIVERED** TO OTHERS ON THE EXPRESS CONDITION THAT IT WILL BE USED ONLY FOR, OR ON BEHALF OF, OTIS; THAT NEITHER IT NOR THE INFORMATION IT CONTAINS WILL BE REPRODUCED OR DISCLOSED, IN WHOLE OR IN PART, WITHOUT THE PRIOR WRITTEN CONSENT OF OTIS; AND THAT ON DEMAND IT AND ANY COPIES WILL BE PROMPTLY RETURNED TO OTIS.

UNPUBLISHED WORK © OTIS ELEVATOR COMPANY

ALL RIGHTS RESERVED.

DWG KAA26800ACP

OTIS ENGINEERING CENTER

CHANGWON, KOREA

CHANGES

2017-08-21 REVISED. SEE KAA26800ACP_CDOC.DOC FOR DETAILS (CN1037523) MILLETT S / MAGDA RF

OTIS United Technologies

HVPB
(High Voltage Power Board)
OVFR03A-406

DRAWN	S. MILLETT	ORIGINAL DATE	2017-01-06
CHK	W. HUANG		
APPD	R. MAGDA	SHEETS	
AUTH	CN897873	SHEET	26

DRAFTED IN ACCORDANCE WITH OTIS DOCUMENT 52847

A3

CONVERTER GATE DRIVER (R-PHASE)

ROOM = CNV_G_R_HIGH

R40 324 0.1W 1%
+5V
3C5< PWM_R_H
R287 1.00K 1% 0.1W
D88 BAV99
R281 107 0.1W 1%
+5V
VCC_ARROW
R95 10K 1% 0.1W
R93 10K 1% 0.1W
29C1<> 28C1<> 27C1<> 28B1<> 29B1<> 18A1<
CNV_UVLO*
29C1<> 28C1<> 27C1<> 28B1<> 29B1<> 19C2<
CNV_FLT*
C233 330PF 50V 5%
C231 330PF 50V 5%
GND
+5V
VCC_ARROW
C171 0.1U 16V 10%
C168 1U 10V 10%
GND

U11
ACPL-352J
VOUTP/CLAMP 11
VS 9
VOUTN 10
OC 14
SS 13
VDD2 12
VSS2 16
(LED2)NC 15
ANODE 7
CATHODE 6 8
UVLO 2
FAULT 3
GFAULT
GND 4
VDD1 5
VSS1 1

C196 470P 50V 5%
BZX84C12 Z11 12V 0.250W
D92 LL42_GS08 0.2W
R54 1.00K 1% 0.1W
R70 3 1W 1%
D120 0.48W MBR0530
D22
BAV99
DUMMY_P27_7
D18 BAV99
D28 1.25W STTH112
DC_BUS+
37A2< 32A6< 30A6< 28A6< 7A2< 9A1< 29A6< 31A6< 36A2<
ROOM=CNV_G_R_HIGH ROOM=CNV_G_R_HIGH ROOM=CNV_G_R_HIGH ROOM=CNV_G_R_HIGH
CNV_G1 36B1<
R321 2 1W 1%
R66 15 0.25W 1%
R601 2.2 0.5W 1%
R81 10K 1% 0.1W
C435 4700PF 50V 5%
Z15 BZB84_B20 20V 300MW
DUMMY_P27_5
CNV_E1 36B1<
ROOM=CNV_G_R_HIGH ROOM=CNV_G_R_HIGH

C195 22UF 25V 20%
C199 22UF 25V 20%
Z8 15V 0.375W BZT52H_B15
+23V_RH 35B6<
C180 22UF 25V 20%
C185 22UF 25V 20%
R57 806 1% 0.125W
+23V_RH_RTN 35B6<

ROOM=CNV_G_R_HIGH
ROOM=CNV_G_R_HIGH
ROOM=CNV_G_R_HIGH
ROOM=CNV_G_R_HIGH
ROOM=CNV_G_R_HIGH
ROOM=CNV_G_R_HIGH
ROOM=CNV_G_R_HIGH
ROOM=CNV_G_R_HIGH
ROOM=CNV_G_R_HIGH
ROOM=CNV_G_R_HIGH
ROOM=CNV_G_R_HIGH
ROOM=CNV_G_R_HIGH
ROOM=CNV_G_R_HIGH
ROOM=CNV_G_R_HIGH
ROOM=CNV_G_R_HIGH
ROOM=CNV_G_R_HIGH
ROOM=CNV_G_R_HIGH
ROOM=CNV_G_R_HIGH
ROOM=CNV_G_R_HIGH
ROOM=CNV_G_R_HIGH

ROOM = CNV_G_R_LOW

R327 324 0.1W 1%
+5V
3C5< PWM_R_L
R74 1.00K 1% 0.1W
D29 BAV99
R326 107 0.1W 1%
+5V
VCC_ARROW
R96 10K 1% 0.1W
R94 10K 1% 0.1W
29C1<> 28C1<> 27B1<> 28B1<> 29B1<> 18A1<
CNV_UVLO*
29C1<> 28C1<> 27B1<> 28B1<> 29B1<> 19C2<
CNV_FLT*
C232 330PF 50V 5%
C230 330PF 50V 5%
GND
+5V
VCC_ARROW
C213 0.1U 16V 10%
C214 1U 10V 10%
GND

U19
ACPL-352J
VOUTP/CLAMP 11
VS 9
VOUTN 10
OC 14
SS 13
VDD2 12
VSS2 16
(LED2)NC 15
ANODE 7
CATHODE 6 8
UVLO 2
FAULT 3
GFAULT
GND 4
VDD1 5
VSS1 1

C220 470P 50V 5%
BZX84C12 Z16 12V 0.250W
D93 LL42_GS08 0.2W
R78 1.00K 1% 0.1W
R84 3 1W 1%
D121 0.48W MBR0530
D32
BAV99
DUMMY_P27_8
D31 BAV99
D33 1.25W STTH112
CNV_R 10A4> 36C1<
CNV_G2 36C1<
R332 2 1W 1%
R83 15 0.25W 1%
R602 2.2 0.5W 1%
R337 10K 1% 0.1W
C446 4700PF 50V 5%
Z40 BZB84_B20 20V 300MW
DUMMY_P27_6
CNV_E2 36C1<

C218 22UF 25V 20%
C221 22UF 25V 20%
Z14 15V 0.375W BZT52H_B15
+23V_RST_LOW 28C5< 29C5< 35A6< 35B1<
C215 22UF 25V 20%
C217 22UF 25V 20%
R80 806 1% 0.125W
+23V_RST_LOW_RTN 28D5< 29D5< 35B6< 35C1<
C412 10UF 35V 10%

ROOM=CNV_G_R_LOW ROOM=CNV_G_R_LOW ROOM=CNV_G_R_LOW
ROOM=CNV_G_R_LOW ROOM=CNV_G_R_LOW ROOM=CNV_G_R_LOW
ROOM=CNV_G_R_LOW ROOM=CNV_G_R_LOW ROOM=CNV_G_R_LOW ROOM=CNV_G_R_LOW
ROOM=CNV_G_R_LOW ROOM=CNV_G_R_LOW ROOM=CNV_G_R_LOW ROOM=CNV_G_R_LOW
ROOM=CNV_G_R_LOW ROOM=CNV_G_R_LOW ROOM=CNV_G_R_LOW ROOM=CNV_G_R_LOW
ROOM=CNV_G_R_LOW ROOM=CNV_G_R_LOW ROOM=CNV_G_R_LOW ROOM=CNV_G_R_LOW
ROOM=CNV_G_R_LOW ROOM=CNV_G_R_LOW ROOM=CNV_G_R_LOW ROOM=CNV_G_R_LOW
ROOM=CNV_G_R_LOW ROOM=CNV_G_R_LOW ROOM=CNV_G_R_LOW ROOM=CNV_G_R_LOW

WARNING
THIS WORK AND THE INFORMATION IT CONTAINS ARE THE PROPERTY OF OTIS ELEVATOR COMPANY (OTIS). **IT IS DELIVERED** TO OTHERS ON THE EXPRESS CONDITION THAT IT WILL BE USED ONLY FOR, OR ON BEHALF OF, OTIS; THAT NEITHER IT NOR THE INFORMATION IT CONTAINS WILL BE REPRODUCED OR DISCLOSED, IN WHOLE OR IN PART, WITHOUT THE PRIOR WRITTEN CONSENT OF OTIS; AND THAT ON DEMAND IT AND ANY COPIES WILL BE PROMPTLY RETURNED TO OTIS.
UNPUBLISHED WORK © OTIS ELEVATOR COMPANY
ALL RIGHTS RESERVED.

DWG KAA26800ACP

OTIS ENGINEERING CENTER
CHANGWON, KOREA

CHANGES
2017-08-21 REVISED. SEE KAA26800ACP_CDOC.DOC FOR DETAILS (CN1037523) MILLETT S / MAGDA RF

HVPB
(High Voltage Power Board)
OVFR03A-406

DRAWN	S. MILLETT	ORIGINAL DATE 2017-01-06
CHK	W. HUANG	
APPD	R. MAGDA	SHEETS
AUTH	CN897873	SHEET 27

DRAFTED IN ACCORDANCE WITH OTIS DOCUMENT 52847

CR-28 : @KAA26800ACP_LIB.KAA26800ACP_LIB(SCH_1):PAGE28

A3

CONVERTER GATE DRIVER (S-PHASE)

ROOM = CNV_G_S_HIGH

R279 324 0.1W 1%
R278 107 0.1W 1%
R35 1.00K 1% 0.1W
D86 BAV99
R89 10K 1% 0.1W
R91 10K 1% 0.1W
C229 330PF 50V 5%
C227 330PF 50V 5%
C30 0.1U 16V 10%
C28 1U 10V 10%
U7 ACPL-352J
ANODE
CATHODE
UVLO
FAULT
GFAULT
VDD1
VSS1
VOUTP/CLAMP
VS
VOUTN
OC
SS
VDD2
VSS2
(LED2)NC
C198 470P 50V 5%
BZX84C12 Z7 12V 0.250W
D90 LL42_GS08 0.2W
R55 1.00K 1% 0.1W
D20 BAV99
DUMMY_P28_7
D16 BAV99
D26 1.25W STTH112
DC_BUS+
R64 3 1W 1%
D3 0.48W MBR0530
R320 2 1W 1%
R58 15 0.25W 1%
R325 10K 1% 0.1W
R22 2.2 0.5W 1%
Z13 BZB84_B20 20V 300MW
DUMMY_P28_5
CNV_G3
CNV_E3
C436 4700PF 50V 5%
C189 22UF 25V 20%
C183 22UF 25V 20%
C174 22UF 25V 20%
C178 22UF 25V 20%
Z4 15V 0.375W BZT52H_B15
R50 806 1% 0.125W
+23V_SH
+23V_SH_RTN
CNV_UVLO*
CNV_FLT*
PWM_S_H
+5V
GND

ROOM = CNV_G_S_LOW

R270 324 0.1W 1%
R31 107 0.1W 1%
R32 1.00K 1% 0.1W
D87 BAV99
R90 10K 1% 0.1W
R92 10K 1% 0.1W
C228 330PF 50V 5%
C226 330PF 50V 5%
C26 0.1U 16V 10%
C152 1U 10V 10%
U3 ACPL-352J
C151 470P 50V 5%
BZX84C12 Z1 12V 0.250W
D83 LL42_GS08 0.2W
R23 1.00K 1% 0.1W
D82 BAV99
DUMMY_P28_8
D7 BAV99
D85 1.25W STTH112
CNV_S
R25 3 1W 1%
D106 0.48W MBR0530
R272 2 1W 1%
R268 15 0.25W 1%
R69 10K 1% 0.1W
R581 2.2 0.5W 1%
Z12 BZB84_B20 20V 300MW
DUMMY_P28_6
CNV_G4
CNV_E4
C437 4700PF 50V 5%
C161 22UF 25V 20%
C160 22UF 25V 20%
C154 22UF 25V 20%
C155 22UF 25V 20%
C407 10UF 35V 10%
Z2 15V 0.375W BZT52H_B15
R33 806 1% 0.125W
+23V_RST_LOW
+23V_RST_LOW_RTN
CNV_UVLO*
CNV_FLT*
PWM_S_L
+5V
GND

WARNING
THIS WORK AND THE INFORMATION IT CONTAINS ARE THE PROPERTY OF OTIS ELEVATOR COMPANY (OTIS). IT IS DELIVERED TO OTHERS ON THE EXPRESS CONDITION THAT IT WILL BE USED ONLY FOR, OR ON BEHALF OF, OTIS; THAT NEITHER IT NOR THE INFORMATION IT CONTAINS WILL BE REPRODUCED OR DISCLOSED, IN WHOLE OR IN PART, WITHOUT THE PRIOR WRITTEN CONSENT OF OTIS; AND THAT ON DEMAND IT AND ANY COPIES WILL BE PROMPTLY RETURNED TO OTIS.
UNPUBLISHED WORK © OTIS ELEVATOR COMPANY
ALL RIGHTS RESERVED.

DWG KAA26800ACP

OTIS ENGINEERING CENTER
CHANGWON, KOREA

CHANGES

2017-08-21 REVISED. SEE KAA26800ACP_CDOC.DOC FOR DETAILS (CN1037523) MILLETT S / MAGDA RF

OTIS United Technologies

HVPB
(High Voltage Power Board)
OVFR03A-406

DRAWN	S. MILLETT	ORIGINAL DATE 2017-01-06
CHK	W. HUANG	
APPD	R. MAGDA	SHEETS
AUTH	CN897873	SHEET 28

DRAFTED IN ACCORDANCE WITH OTIS DOCUMENT 52847

CR-29 : @KAA26800ACP_LIB.KAA26800ACP_LIB(SCH_1):PAGE29

A3

ROOM=CNV_G_T_HIGH
ROOM=CNV_G_T_HIGH
ROOM=CNV_G_T_HIGH
ROOM=CNV_G_T_HIGH

ROOM=CNV_G_T_HIGH
ROOM=CNV_G_T_HIGH

CONVERTER GATE DRIVER (T-PHASE)

ROOM=CNV_G_T_HIGH ROOM=CNV_G_T_HIGH
ROOM=CNV_G_T_HIGH ROOM=CNV_G_T_HIGH
ROOM=CNV_G_T_HIGH ROOM=CNV_G_T_HIGH
ROOM=CNV_G_T_HIGH ROOM=CNV_G_T_HIGH

ROOM = CNV_G_T_HIGH

R41 324 0.1W 1%
+5V
3C5< PWM_T_H
R292 107 0.1W 1%
R293 1.00K 1% 0.1W
D12 BAV99
+5V
VCC_ARROW
R87 10K 1% 0.1W
R85 10K 1% 0.1W
CNV_UVLO*
CNV_FLT*
19C2< 28B1<> 29C1<> 28B1<> 27B1<> 27C1<> 28C1<>
C225 330PF 50V 5%
C223 330PF 50V 5%
GND
ROOM=CNV_G_T_HIGH ROOM=CNV_G_T_HIGH
+5V
VCC_ARROW
C32 0.1U 16V 10%
C33 1U 10V 10%
GND
ROOM=CNV_G_T_HIGH ROOM=CNV_G_T_HIGH

U13
ACPL-352J
ANODE
CATHODE
UVLO
FAULT
GFAULT
VDD1
VSS1
VOUTP/CLAMP
VS
VOUTN
OC
SS
VDD2
VSS2
(LED2)NC

ROOM=CNV_G_T_HIGH ROOM=CNV_G_T_HIGH
ROOM=CNV_G_T_HIGH ROOM=CNV_G_T_HIGH

C41 470P 50V 5%
BZX84C12 Z10 12V 0.250W
D91 LL42_GS08 0.2W
R315 1.00K 1% 0.1W
D21 BAV99
DUMMY_P29_7
D17 BAV99
D27 1.25W STTH112
DC_BUS+
37A2< 32A6< 30A6< 27A6< 7A2< 9A1< 28A6< 31A6< 36A2<
R67 3 1W 1%
D107 0.48W MBR0530
R73 2 1W 1%
CNV_G5 36B4<
R322 15 0.25W 1%
R582 2.2 0.5W 1%
R79 10K 1% 0.1W
Z17 BZB84_B20 20V 300MW
DUMMY_P29_5
C438 4700PF 50V 5%
CNV_E5 36B4<
35C6< ROOM=CNV_G_T_HIGH ROOM=CNV_G_T_HIGH ROOM=CNV_G_T_HIGH ROOM=CNV_G_T_HIGH ROOM=CNV_G_T_HIGH ROOM=CNV_G_T_HIGH ROOM=CNV_G_T_HIGH
ROOM=CNV_G_T_HIGH
C206 22UF 25V 20%
C201 22UF 25V 20%
C182 22UF 25V 20%
C187 22UF 25V 20%
+23V_TH
Z9 15V 0.375W BZT52H_B15
R59 806 1% 0.125W
+23V_TH_RTN

ROOM = CNV_G_T_LOW

R282 324 0.1W 1%
+5V
3C5< PWM_T_L
R36 107 0.1W 1%
R277 1.00K 1% 0.1W
D9 BAV99
+5V
VCC_ARROW
R88 10K 1% 0.1W
R86 10K 1% 0.1W
29B1<> 28B1<> 27B1<> 27C1<> 28C1<> 18A1<>
CNV_UVLO*
CNV_FLT*
19C2<
C224 330PF 50V 5%
C222 330PF 50V 5%
GND
+5V
VCC_ARROW
C163 0.1U 16V 10%
C31 1U 10V 10%
GND

ROOM=CNV_G_T_LOW ROOM=CNV_G_T_LOW
ROOM=CNV_G_T_LOW ROOM=CNV_G_T_LOW
ROOM=CNV_G_T_LOW ROOM=CNV_G_T_LOW
ROOM=CNV_G_T_LOW ROOM=CNV_G_T_LOW
ROOM=CNV_G_T_LOW ROOM=CNV_G_T_LOW
ROOM=CNV_G_T_LOW ROOM=CNV_G_T_LOW
ROOM=CNV_G_T_LOW ROOM=CNV_G_T_LOW
ROOM=CNV_G_T_LOW ROOM=CNV_G_T_LOW
ROOM=CNV_G_T_LOW ROOM=CNV_G_T_LOW
ROOM=CNV_G_T_LOW ROOM=CNV_G_T_LOW
ROOM=CNV_G_T_LOW ROOM=CNV_G_T_LOW
ROOM=CNV_G_T_LOW ROOM=CNV_G_T_LOW
ROOM=CNV_G_T_LOW ROOM=CNV_G_T_LOW
ROOM=CNV_G_T_LOW ROOM=CNV_G_T_LOW
ROOM=CNV_G_T_LOW ROOM=CNV_G_T_LOW
ROOM=CNV_G_T_LOW ROOM=CNV_G_T_LOW

U8
ACPL-352J
ANODE
CATHODE
UVLO
FAULT
GFAULT
VDD1
VSS1
VOUTP/CLAMP
VS
VOUTN
OC
SS
VDD2
VSS2
(LED2)NC

C191 470P 50V 5%
BZX84C12 Z6 12V 0.250W
D89 LL42_GS08 0.2W
R314 1.00K 1% 0.1W
D23 BAV99
DUMMY_P29_8
D19 BAV99
D24 1.25W STTH112
CNV_T 10C4<> 36D1<>
R65 3 1W 1%
D108 0.48W MBR0530
R317 2 1W 1%
R68 15 0.25W 1%
CNV_G6 36C4<
R592 2.2 0.5W 1%
R82 10K 1% 0.1W
Z18 BZB84_B20 20V 300MW
DUMMY_P29_6
C439 4700PF 50V 5%
CNV_E6 36C4<
C408 10UF 35V 10%
C173 22UF 25V 20%
C190 22UF 25V 20%
C177 22UF 25V 20%
C184 22UF 25V 20%
+23V_RST_LOW
Z5 15V 0.375W BZT52H_B15
R51 806 1% 0.125W
+23V_RST_LOW_RTN
27C5< 28C5< 35A6< 35B1<
35C1< 27D5< 28D5< 35B6<

ROOM=CNV_G_T_LOW ROOM=CNV_G_T_LOW
ROOM=CNV_G_T_LOW ROOM=CNV_G_T_LOW
ROOM=CNV_G_T_LOW ROOM=CNV_G_T_LOW
ROOM=CNV_G_T_LOW ROOM=CNV_G_T_LOW
ROOM=CNV_G_T_LOW ROOM=CNV_G_T_LOW
ROOM=CNV_G_T_LOW ROOM=CNV_G_T_LOW
ROOM=CNV_G_T_LOW ROOM=CNV_G_T_LOW
ROOM=CNV_G_T_LOW ROOM=CNV_G_T_LOW
ROOM=CNV_G_T_LOW ROOM=CNV_G_T_LOW
ROOM=CNV_G_T_LOW ROOM=CNV_G_T_LOW
ROOM=CNV_G_T_LOW ROOM=CNV_G_T_LOW
ROOM=CNV_G_T_LOW ROOM=CNV_G_T_LOW
ROOM=CNV_G_T_LOW ROOM=CNV_G_T_LOW
ROOM=CNV_G_T_LOW ROOM=CNV_G_T_LOW
ROOM=CNV_G_T_LOW ROOM=CNV_G_T_LOW
ROOM=CNV_G_T_LOW ROOM=CNV_G_T_LOW

WARNING
THIS WORK AND THE INFORMATION IT CONTAINS ARE THE PROPERTY OF OTIS ELEVATOR COMPANY (OTIS). IT IS DELIVERED TO OTHERS ON THE EXPRESS CONDITION THAT IT WILL BE USED ONLY FOR, OR ON BEHALF OF, OTIS; THAT NEITHER IT NOR THE INFORMATION IT CONTAINS WILL BE REPRODUCED OR DISCLOSED, IN WHOLE OR IN PART, WITHOUT THE PRIOR WRITTEN CONSENT OF OTIS; AND THAT ON DEMAND IT AND ANY COPIES WILL BE PROMPTLY RETURNED TO OTIS.
UNPUBLISHED WORK © OTIS ELEVATOR COMPANY
ALL RIGHTS RESERVED.

DWG KAA26800ACP

OTIS ENGINEERING CENTER
CHANGWON, KOREA

CHANGES

2017-08-21 REVISED. SEE KAA26800ACP_CDOC.DOC FOR DETAILS (CN1037523) MILLETT S / MAGDA RF

OTIS United Technologies

HVPB
(High Voltage Power Board)
OVFR03A-406

DRAWN	S. MILLETT	ORIGINAL DATE	2017-01-06
CHK	W. HUANG		
APPD	R. MAGDA	SHEETS	
AUTH	CN897873	SHEET	29

DRAFTED IN ACCORDANCE WITH OTIS DOCUMENT 52847

CR-30 : @KAA26800ACP_LIB.KAA26800ACP_LIB(SCH_1):PAGE30

A3

INVERTER GATE DRIVER(U-PHASE)
PER EN81-50

ROOM=INV_G_U_HIGH ROOM=INV_G_U_HIGH ROOM=INV_G_U_HIGH ROOM=INV_G_U_HIGH ROOM=INV_G_U_HIGH ROOM=INV_G_U_HIGH ROOM=INV_G_U_HIGH ROOM=INV_G_U_HIGH ROOM=INV_G_U_HIGH

ROOM = INV_G_U_HIGH

R522 324 0.1W 1%

+5V

23B2< 22B6<> PWM_U_H

R525 107 0.1W 1%

R524 1.00K 1% 0.1W

D63 BAV99

R120 10K 1% 0.1W

R126 10K 1% 0.1W

18B1< INV_UVLO_UH*

32C1<> 31C1<> 30C1<> 31B1<> 32B1<> 19D2< INV_FLT*

C275 330PF 50V 5%

C269 330PF 50V 5%

GND

C110 0.1U 16V 10%

C111 1U 10V 10%

U62 ACPL-352J

ANODE

CATHODE

UVLO

FAULT

GFAULT

VDD1

VSS1

VOUTP/CLAMP

VS

VOUTN

OC

SS

VDD2

VSS2

(LED2)NC

C96 470P 50V 5%

BZX84C12 Z45 12V 0.250W

D56 LL42_GS08 0.2W

R505 1.00K 1% 0.1W

R171 3 1W 1%

D51 BAV99

DUMMY_P30_7

D98 BAV99

D44 1.25W STTH112

DC_BUS+ 9A1< 36A2< 31A6< 28A6< 7A2< 27A6< 29A6< 32A6< 37A2<

D109 0.48W MBR0530

R499 2 1W 1%

R177 15 0.25W 1%

R595 2.2 0.5W 1%

INV_G1 37B1<

R166 10K 1% 0.1W

Z21 BZB84_B20 20V 300MW

DUMMY_P30_5

C440 4700PF 50V 5%

INV_E1 37B1<

C341 22UF 25V 20%

C338 22UF 25V 20%

C342 22UF 25V 20%

C335 22UF 25V 20%

+23V_UH 34C6<

Z29 15V 0.375W BZT52H_B15

R187 806 1% 0.125W

+23V_UH_RTN 34D6<

ROOM=INV_G_U_HIGH ROOM=INV_G_U_HIGH ROOM=INV_G_U_HIGH ROOM=INV_G_U_HIGH ROOM=INV_G_U_HIGH ROOM=INV_G_U_HIGH ROOM=INV_G_U_HIGH ROOM=INV_G_U_HIGH

ROOM = INV_G_U_LOW

R537 324 0.1W 1%

+5V

23C2< 22C6<> PWM_U_L

R200 107 0.1W 1%

R538 1.00K 1% 0.1W

D67 BAV99

R122 10K 1% 0.1W

R128 10K 1% 0.1W

18B1< INV_UVLO_UL*

31C1<> 30B1<> 31B1<> 32B1<> 32C1<> 19D2< INV_FLT*

C273 330PF 50V 5%

C267 330PF 50V 5%

GND

C122 0.1U 16V 10%

C121 1U 10V 10%

U68 ACPL-352J

ANODE

CATHODE

UVLO

FAULT

GFAULT

VDD1

VSS1

VOUTP/CLAMP

VS

VOUTN

OC

SS

VDD2

VSS2

(LED2)NC

C115 470P 50V 5%

BZX84C12 Z31 12V 0.250W

D64 LL42_GS08 0.2W

R213 1.00K 1% 0.1W

R195 3 1W 1%

D73 BAV99

DUMMY_P30_8

D74 BAV99

D69 1.25W STTH112

INV_U1 11B3< 37C1<

D110 0.48W MBR0530

R523 2 1W 1%

R199 15 0.25W 1%

R596 2.2 0.5W 1%

INV_G2 37C1<

R190 10K 1% 0.1W

Z28 BZB84_B20 20V 300MW

DUMMY_P30_6

C441 4700PF 50V 5%

INV_E2 37C1<

C350 22UF 25V 20%

C349 22UF 25V 20%

C348 22UF 25V 20%

C351 22UF 25V 20%

C409 10UF 35V 10%

+23V_UVW_LOW 31C5< 32C5< 34A6< 34B1<

Z32 15V 0.375W BZT52H_B15

R205 806 1% 0.125W

34B6< 32D5< 31D5< 34C1<

+23V_UVW_LOW_RTN

ROOM=INV_G_U_LOW ROOM=INV_G_U_LOW ROOM=INV_G_U_LOW

CR-31 : @KAA26800ACP_LIB.KAA26800ACP_LIB(SCH_1):PAGE31

A3

INVERTER GATE DRIVER(V-PHASE)
PER EN81-50

ROOM=INV_G_V_HIGH
ROOM=INV_G_V_HIGH
ROOM=INV_G_V_HIGH
ROOM=INV_G_V_HIGH
ROOM=INV_G_V_HIGH
ROOM=INV_G_V_HIGH
ROOM=INV_G_V_HIGH
ROOM=INV_G_V_HIGH
ROOM=INV_G_V_HIGH
ROOM=INV_G_V_HIGH
ROOM=INV_G_V_HIGH
ROOM=INV_G_V_HIGH

ROOM = INV_G_V_HIGH

R513 324 0.1W 1%
+5V
23C2< 22C6<> PWM_V_H
R512 1.00K 1% 0.1W
R197 107 0.1W 1%
D57 BAV99
R121 10K 1% 0.1W
R127 10K 1% 0.1W
VCC_ARROW
18C1< INV_UVLO_VH*
32C1<> 31C1<> 30B1<> 30C1<> 32B1<> 19D2< INV_FLT*
C274 330PF 50V 5%
C268 330PF 50V 5%
GND
C102 0.1U 16V 10%
C103 1U 10V 10%

U59 ACPL-352J
ANODE
CATHODE
UVLO
FAULT
GFAULT
VDD1
VSS1
VOUTP/CLAMP
VS
VOUTN
OC
SS
VDD2
VSS2
(LED2)NC

C95 470P 50V 5%
BZX84C12 Z25 12V 0.250W
D46 LL42_GS08 0.2W
R186 1.00K 1% 0.1W
D53 BAV99
DUMMY_P31_7
D54 BAV99
R172 3 1W 1%
D116 0.48W MBR0530
R497 2 1W 1%
R169 15 0.25W 1%
D48 1.25W STTH112
DC_BUS+
37A2< 30A6< 27A6< 7A2< 9A1< 28A6< 32A6< 29A6< 36A2<
INV_G3 37B3<
Z20 BZB84_B20 20V 300MW
R165 10K 1% 0.1W
R598 2.2 0.5W 1%
C443 4700PF 50V 5%
DUMMY_P31_5
INV_E3 37B3<

C333 22UF 25V 20%
C337 22UF 25V 20%
C329 22UF 25V 20%
C340 22UF 25V 20%
+23V_VH 34C6<
Z27 15V 0.375W BZT52H_B15
R180 806 1% 0.125W
+23V_VH_RTN 34C6<

ROOM=INV_G_V_HIGH
ROOM=INV_G_V_HIGH
ROOM=INV_G_V_HIGH
ROOM=INV_G_V_HIGH
ROOM=INV_G_V_HIGH
ROOM=INV_G_V_HIGH
ROOM=INV_G_V_HIGH
ROOM=INV_G_V_HIGH
ROOM=INV_G_V_HIGH
ROOM=INV_G_V_HIGH
ROOM=INV_G_V_HIGH
ROOM=INV_G_V_HIGH

ROOM = INV_G_V_LOW

R194 324 0.1W 1%
+5V
23D2< 22C6<> PWM_V_L
R193 1.00K 1% 0.1W
R196 107 0.1W 1%
D61 BAV99
R123 10K 1% 0.1W
R129 10K 1% 0.1W
VCC_ARROW
18C1< INV_UVLO_VL*
31B1<> 30B1<> 30C1<> 32B1<> 32C1<> 19D2< INV_FLT*
C272 330PF 50V 5%
C266 330PF 50V 5%
GND
C101 0.1U 16V 10%
C344 1U 10V 10%

U58 ACPL-352J
ANODE
CATHODE
UVLO
FAULT
GFAULT
VDD1
VSS1
VOUTP/CLAMP
VS
VOUTN
OC
SS
VDD2
VSS2
(LED2)NC

C94 470P 50V 5%
BZX84C12 Z23 12V 0.250W
D45 LL42_GS08 0.2W
R181 1.00K 1% 0.1W
D52 BAV99
DUMMY_P31_8
D55 BAV99
R174 3 1W 1%
D117 0.48W MBR0530
R495 2 1W 1%
R170 15 0.25W 1%
D47 1.25W STTH112
INV_V1 11C3< 37D1<
INV_G4 37C3<
Z19 BZB84_B20 20V 300MW
R162 10K 1% 0.1W
R597 2.2 0.5W 1%
C442 4700PF 50V 5%
DUMMY_P31_6
INV_E4 37C3<

C336 22UF 25V 20%
C332 22UF 25V 20%
C339 22UF 25V 20%
C327 22UF 25V 20%
C410 10UF 35V 10%
+23V_UVW_LOW 30C5< 32C5< 34A6< 34B1<
Z26 15V 0.375W BZT52H_B15
R179 806 1% 0.125W
+23V_UVW_LOW_RTN 30D5< 32D5< 34B6< 34C1<

ROOM=INV_G_V_LOW
ROOM=INV_G_V_LOW
ROOM=INV_G_V_LOW
ROOM=INV_G_V_LOW
ROOM=INV_G_V_LOW
ROOM=INV_G_V_LOW
ROOM=INV_G_V_LOW
ROOM=INV_G_V_LOW
ROOM=INV_G_V_LOW
ROOM=INV_G_V_LOW
ROOM=INV_G_V_LOW
ROOM=INV_G_V_LOW

WARNING
THIS WORK AND THE INFORMATION IT CONTAINS ARE THE PROPERTY OF OTIS ELEVATOR COMPANY (OTIS). IT IS DELIVERED TO OTHERS ON THE EXPRESS CONDITION THAT IT WILL BE USED ONLY FOR, OR ON BEHALF OF, OTIS; THAT NEITHER IT NOR THE INFORMATION IT CONTAINS WILL BE REPRODUCED OR DISCLOSED, IN WHOLE OR IN PART, WITHOUT THE PRIOR WRITTEN CONSENT OF OTIS; AND THAT ON DEMAND IT AND ANY COPIES WILL BE PROMPTLY RETURNED TO OTIS.
UNPUBLISHED WORK © OTIS ELEVATOR COMPANY
ALL RIGHTS RESERVED.

DWG KAA26800ACP

OTIS ENGINEERING CENTER
CHANGWON, KOREA

CHANGES
2017-08-21 REVISED. SEE KAA26800ACP_CDOC.DOC FOR DETAILS (CN1037523) MILLETT S / MAGDA RF

HVPB
(High Voltage Power Board)
OVFR03A-406

DRAWN	S. MILLETT	ORIGINAL DATE 2017-01-06
CHK	W. HUANG	
APPD	R. MAGDA	SHEETS
AUTH	CN897873	SHEET 31

DRAFTED IN ACCORDANCE WITH OTIS DOCUMENT 52847

CR-32 : @KAA26800ACP_LIB_KAA26800ACP_LIB(SCH_1):PAGE32

A3

INVERTER GATE DRIVER(W-PHASE) PER EN81-50

ROOM=INV_G_W_HIGH
ROOM=INV_G_W_HIGH
ROOM=INV_G_W_HIGH
ROOM=INV_G_W_HIGH
ROOM=INV_G_W_HIGH
ROOM=INV_G_W_HIGH
ROOM=INV_G_W_HIGH
ROOM=INV_G_W_HIGH
ROOM=INV_G_W_HIGH
ROOM=INV_G_W_HIGH
ROOM=INV_G_W_HIGH
ROOM=INV_G_W_HIGH
ROOM=INV_G_W_HIGH
ROOM=INV_G_W_HIGH

ROOM = INV_G_W_HIGH

R210 324 0.1W 1%
+5V
23B3< 22C6<> PWM_W_H
R214 1.00K 1% 0.1W
R209 107 0.1W 1%
D72 BAV99
+5V
VCC_ARROW
R124 10K 1% 0.1W
R130 10K 1% 0.1W
18C1<
INV_UVLO_WH*
32C1<> 31B1<> 30B1<> 30C1<> 31C1<> 19D2<
INV_FLT*
C271 330PF 50V 5%
C265 330PF 50V 5%
GND
+5V
VCC_ARROW
C119 0.1U 16V 10%
C352 1U 10V 10%
GND

U67 ACPL-352J

VOUTP/CLAMP	11	
VS	9	
VOUTN	10	
OC	14	
SS	13	
VDD2	12	
VSS2	16	
(LED2)NC	15	
ANODE	7	
CATHODE	6, 8	
UVLO	2	
FAULT	3	
GFAULT	4	
VDD1	5	
VSS1	1	

C123 470P 50V 5%
BZX84C12 Z33 12V 0.250W
D70 LL42_GS08 0.2W
R204 1.00K 1% 0.1W
D66 BAV99
DUMMY_P32_7
D100 BAV99
R198 3 1W 1%
D119 0.48W MBR0530
R520 2 1W 1%
R519 15 0.25W 1%
D60 1.25W STTH112
DC_BUS+
37A2< 31A6< 29A6< 27A6< 7A2< 9A1< 28A6< 30A6< 36A2<
INV_G5 37B5<
R599 2.2 0.5W 1%
R178 10K 1% 0.1W
Z24 BZB84_B20 20V 300MW
DUMMY_P32_5
C444 4700PF 50V 5%
INV_E5 37B5<

C357 22UF 25V 20%
C358 22UF 25V 20%
C359 22UF 25V 20%
C356 22UF 25V 20%
+23V_WH 34B6<
Z35 15V 0.375W BZT52H_B15
R212 806 1% 0.125W
+23V_WH_RTN 34B6<

ROOM=INV_G_W_HIGH
ROOM=INV_G_W_HIGH
ROOM=INV_G_W_HIGH
ROOM=INV_G_W_HIGH
ROOM=INV_G_W_HIGH
ROOM=INV_G_W_HIGH
ROOM=INV_G_W_HIGH
ROOM=INV_G_W_HIGH

ROOM = INV_G_W_LOW

R239 324 0.1W 1%
+5V
23C3< 22C6<> PWM_W_L
R238 1.00K 1% 0.1W
R240 107 0.1W 1%
D75 BAV99
+5V
VCC_ARROW
R125 10K 1% 0.1W
R131 10K 1% 0.1W
18C1<
INV_UVLO_WL*
32B1<> 31B1<> 30B1<> 30C1<> 31C1<> 19D2<
INV_FLT*
C270 330PF 50V 5%
C264 330PF 50V 5%
GND
+5V
VCC_ARROW
C129 0.1U 16V 10%
C368 1U 10V 10%
GND

U71 ACPL-352J

VOUTP/CLAMP	11	
VS	9	
VOUTN	10	
OC	14	
SS	13	
VDD2	12	
VSS2	16	
(LED2)NC	15	
ANODE	7	
CATHODE	6, 8	
UVLO	2	
FAULT	3	
GFAULT	4	
VDD1	5	
VSS1	1	

C116 470P 50V 5%
BZX84C12 Z30 12V 0.250W
D62 LL42_GS08 0.2W
R211 1.00K 1% 0.1W
D68 BAV99
DUMMY_P32_8
D71 BAV99
R203 3 1W 1%
D118 0.48W MBR0530
R528 2 1W 1%
R201 15 0.25W 1%
D65 1.25W STTH112
INV_W1 11D3< 37D1<
INV_G6 37C5<
R600 2.2 0.5W 1%
R173 10K 1% 0.1W
Z22 BZB84_B20 20V 300MW
DUMMY_P32_6
C445 4700PF 50V 5%
INV_E6 37C5<

C411 10UF 35V 10%
C363 22UF 25V 20%
C353 22UF 25V 20%
C355 22UF 25V 20%
C361 22UF 25V 20%
+23V_UVW_LOW 30C5< 31C5< 34A6< 34B1<
Z34 15V 0.375W BZT52H_B15
R206 806 1% 0.125W
+23V_UVW_LOW_RTN 30C5< 31C5<

ROOM=INV_G_W_LOW
ROOM=INV_G_W_LOW
ROOM=INV_G_W_LOW
ROOM=INV_G_W_LOW
ROOM=INV_G_W_LOW
ROOM=INV_G_W_LOW
ROOM=INV_G_W_LOW
ROOM=INV_G_W_LOW
ROOM=INV_G_W_LOW
ROOM=INV_G_W_LOW
ROOM=INV_G_W_LOW
ROOM=INV_G_W_LOW
ROOM=INV_G_W_LOW
ROOM=INV_G_W_LOW

WARNING
THIS WORK AND THE INFORMATION IT CONTAINS ARE THE PROPERTY OF OTIS ELEVATOR COMPANY (OTIS). **IT IS DELIVERED** TO OTHERS ON THE EXPRESS CONDITION THAT IT WILL BE USED ONLY FOR, OR ON BEHALF OF, OTIS, THAT NEITHER IT NOR THE INFORMATION IT CONTAINS WILL BE REPRODUCED OR DISCLOSED, IN WHOLE OR IN PART, WITHOUT THE PRIOR WRITTEN CONSENT OF OTIS, AND THAT ON DEMAND IT AND ANY COPIES WILL BE PROMPTLY RETURNED TO OTIS.
UNPUBLISHED WORK © OTIS ELEVATOR COMPANY
ALL RIGHTS RESERVED.

DWG KAA26800ACP

OTIS ENGINEERING CENTER
CHANGWON, KOREA

CHANGES

2017-08-21 REVISED. SEE KAA26800ACP_CDOC.DOC FOR DETAILS (CN1037523) MILLETT S / MAGDA RF

OTIS United Technologies

HVPB
(High Voltage Power Board)
OVFR03A-406

DRAWN	S. MILLETT	ORIGINAL DATE	2017-01-06
CHK	W. HUANG		
APPD	R. MAGDA	SHEETS	
AUTH	CN897873	SHEET	32

DRAFTED IN ACCORDANCE WITH OTIS DOCUMENT 52847

CR-33 : @KAA26800ACP_LIB.KAA26800ACP_LIB(SCH_1):PAGE33

A3

ROOM=GATE_INPUT_PWR
ROOM=GATE_INPUT_PWR
ROOM=GATE_INPUT_PWR
ROOM=GATE_INPUT_PWR
ROOM=GATE_INPUT_PWR
ROOM=GATE_INPUT_PWR
ROOM=GATE_INPUT_PWR
ROOM=GATE_INPUT_PWR

ROOM=GATE_INPUT_PWR
ROOM=GATE_INPUT_PWR
ROOM=GATE_INPUT_PWR
ROOM=GATE_INPUT_PWR
ROOM=GATE_INPUT_PWR
ROOM=GATE_INPUT_PWR
ROOM=GATE_INPUT_PWR
ROOM=GATE_INPUT_PWR
ROOM=GATE_INPUT_PWR
ROOM=GATE_INPUT_PWR
ROOM=GATE_INPUT_PWR

GATE 30V INPUT SMPS

ROOM=GATE_INPUT_PWR

19B5< 15B4< 15B1< 25B5< 25B1< 24C1< 24A6< 17A1<

ENBL_5V
R304 499 1% 0.1W
R46 10K 1% 0.1W
GND
U9 TLP188
R38 1M 1% 0.125W
R285 1M 1% 0.125W
R290 118K 0.125W 1%
R296 63.4K 0.125W 1%
R43 19.6K 0.1W 1%
LVP_SMPS
C404 470PF 250V 5%
C405 470PF 250V 5%
C170 0.22UF 250V 10%
LVP_SMPS_RTN

U10 LTC7138
VIN
RUN
SS
VPRG1
VPRG2
GND
EP
SW
ANODE
VFB
FBO
ISET
OVLO
C186 0.033U 16V 10%
D13 MBRS3201P 2W
L4 330UH 1.1A 20% 20%
DUMMY_P33_2
R48 200K 1% 0.125W
ASSEMBLY_SEC1=NO
ASSEMBLY_SEC2=NO
ASSEMBLY_SEC3=NO
ASSEMBLY_SEC4=NO
R307 20K 1% 0.1W
R306 20K 1% 0.1W
R305 10K 1% 0.1W
R47 10K 1% 0.1W
+30V_GATE 20B6<
C202 0.1UF 50V 10%
C40 47UF 50V 20%
C194 10UF 50V 10%
C406 0.01UF 50V 5%
+30V_GATE_RTN 20B6<

WARNING

THIS WORK AND THE INFORMATION IT CONTAINS ARE THE PROPERTY OF OTIS ELEVATOR COMPANY (OTIS). **IT IS DELIVERED** TO OTHERS ON THE EXPRESS CONDITION THAT IT WILL BE USED ONLY FOR, OR ON BEHALF OF, OTIS; THAT NEITHER IT NOR THE INFORMATION IT CONTAINS WILL BE REPRODUCED OR DISCLOSED, IN WHOLE OR IN PART, WITHOUT THE PRIOR WRITTEN CONSENT OF OTIS; AND THAT ON DEMAND IT AND ANY COPIES WILL BE PROMPTLY RETURNED TO OTIS.

UNPUBLISHED WORK © OTIS ELEVATOR COMPANY
ALL RIGHTS RESERVED.

DWG KAA26800ACP

OTIS ENGINEERING CENTER
CHANGWON, KOREA

CHANGES

2017-08-21 REVISED. SEE KAA26800ACP_CDOC.DOC FOR DETAILS (CN1037523) MILLETT S / MAGDA RF

OTIS
United Technologies

HVPB
(High Voltage Power Board)
OVFR03A-406

DRAWN	S. MILLETT	ORIGINAL DATE 2017-01-06
CHK	W. HUANG	
APPD	R. MAGDA	SHEETS
AUTH	CN897873	SHEET 33

DRAFTED IN ACCORDANCE WITH OTIS DOCUMENT 52847

CR-34 : @KAA26800ACP_LIB,KAA26800ACP_LIB(SCH_1):PAGE34

A3

GATE SUPPLY OF INVERTER

OUTPUT VOLTAGE: 21V

ROOM=INV_GATE_PWR

+30V_GATE_INV

R514 20K 1% 0.1W

ASSEMBLY_SEC1=NO

R521 10K 1% 0.1W

C462 10UF 50V 10%

C71 47UF 50V 20%

C288 10UF 50V 10%

C289 0.1UF 50V 10%

Q19 BSP320S

R446 51 1W 1%

R460 2K 1W 1%

C284 1UF 50V 10%

RLZ5237B Z43 8.2V 0.5W

ASSEMBLY_SEC1=ALT0
ALT0 = ZERO OHM JUMPERS
AAA232HF11

C72 0.01UF 50V 5%

C403 0.01UF 50V 5%

R136 210K 1% 0.125W

R137 210K 1% 0.125W

R461 160K 5% 0.75W

C292 470PF 250V 5%

R453 43 5% 0.75W

D97 1.19W RS1G

28-32VDC

W1

+30V_GATE_INV_RTN

REINFORCED INSULATION+ PER EN81-50

+23V_UVW_LOW

R134 29.4K 0.1W 1%

R437 100 1% 0.1W

R132 1.00K 1% 0.1W

U39 TLP385

C67 0.1UF 50V 10%

U40 TL431AID

REF

R133 4.12K 0.1W 1%

+23V_UVW_LOW_RTN

UVLO: 22V

U44 DPA423G

CONTROL
LINE-SENSE
EXTERNAL CURRENT LIMIT
FREQUENCY
DRAIN
SOURCE

R135 6.8 5% 0.1W

C69 1UF 50V 10%

C68 47UF 35V 20%

C278 0.1U 16V 10%

R439 8.06K 0.1W 1%

C464 220PF 250V 5%

R316 27 1% 0.5W

+30V_GATE_INV_RTN

REINFORCED INSULATION+
PER EN81-50

ROOM=INV_GATE_PWR

C277 100PF 100V 5%

R438 27 5% 0.75W

21V +23V_UVW_LOW

D38 BAT46 0.44W

C66 18UF 35V 20%

C415 10UF 35V 10%

C457 100PF 50V 5%

+23V_UVW_LOW_RTN

C287 100PF 100V 5%

TR3 SUMIDA_545_01_342_00

W2 23V 90mA

W3 23V 30mA

W4 23V 30mA

W5 23V 30mA

R457 27 5% 0.75W

D39 BAT46 0.44W

21V +23V_WH

C454 100PF 50V 5%

C73 18UF 35V 20%

R494 20K 1% 0.1W

+23V_WH_RTN

C298 100PF 100V 5%

R464 27 5% 0.75W

D40 BAT46 0.44W

21V +23V_VH

C79 18UF 35V 20%

C456 100PF 50V 5%

R504 20K 1% 0.1W

+23V_VH_RTN

C328 100PF 100V 5%

R498 27 5% 0.75W

D50 BAT46 0.44W

21V +23V_UH

C99 18UF 35V 20%

C455 100PF 50V 5%

R496 20K 1% 0.1W

+23V_UH_RTN

ROOM=INV_GATE_PWR

WARNING

THIS WORK AND THE INFORMATION IT CONTAINS ARE THE PROPERTY OF OTIS ELEVATOR COMPANY (OTIS). IT IS DELIVERED TO OTHERS ON THE EXPRESS CONDITION THAT IT WILL BE USED ONLY FOR, OR ON BEHALF OF, OTIS; THAT NEITHER IT NOR THE INFORMATION IT CONTAINS WILL BE REPRODUCED OR DISCLOSED, IN WHOLE OR IN PART, WITHOUT THE PRIOR WRITTEN CONSENT OF OTIS; AND THAT ON DEMAND IT AND ANY COPIES WILL BE PROMPTLY RETURNED TO OTIS.

UNPUBLISHED WORK © OTIS ELEVATOR COMPANY

ALL RIGHTS RESERVED.

DWG KAA26800ACP

OTIS ENGINEERING CENTER

CHANGWON, KOREA

CHANGES

2017-08-21 REVISED. SEE KAA26800ACP_CDOC.DOC FOR DETAILS (CN1037523) MILLETT S / MAGDA RF

OTIS United Technologies

HVPB
(High Voltage Power Board)
OVFR03A-406

DRAWN	S. MILLETT	ORIGINAL DATE	2017-01-06
CHK	W. HUANG		
APPD	R. MAGDA	SHEETS	
AUTH	CN897873	SHEET	34

DRAFTED IN ACCORDANCE WITH OTIS DOCUMENT 52847

CR-35 : @KAA26800ACP_LIB.KAA26800ACP_LIB(CNV_GATE_PWR)

A3

GATE SUPPLY OF CONVERTER

OUTPUT VOLTAGE: 21V

ROOM=CNV_GATE_PWR

20B6< +30V_GATE_CNV

20B6< 35C2< +30V_GATE_CNV_RTN

C56 47UF 50V 20%
C250 10UF 50V 10%
C247 1UF 50V 10%
C246 0.1UF 50V 10%
C413 0.01UF 50V 5%
C248 1UF 50V 10%
R411 2K 1W 1%
RLZ5237B Z41 8.2V 0.5W

R102 210K 1% 0.125W
R103 210K 1% 0.125W

R413 160K 5% 0.75W
C251 470PF 250V 5%
R394 43 5% 0.75W
D94 1.19W RS1G

28-32VDC
W1

UVLO: 22V

U30 DPA423G

CONTROL
LINE-SENSE
EXTERNAL CURRENT LIMIT
FREQUENCY
DRAIN
SOURCE

C463 220PF 250V 5%
R280 27 1% 0.5W

R101 6.8 5% 0.1W
C241 0.1U 16V 10%
C52 47UF 35V 20%
C51 1UF 50V 10%
R368 8.06K 0.1W 1%

+30V_GATE_CNV_RTN

20B6<
35B1<

REINFORCED INSULATION

28C5< 29C5< 35A6< 27C5< +23V_RST_LOW

R99 29.4K 0.1W 1%
R361 100 1% 0.1W
R100 1.00K 1% 0.1W
C50 0.1UF 50V 10%

U27 TLP385

U28 TL431AID
REF

R98 4.12K 0.1W 1%

29D5< 27D5< 28D5< 35B6<
+23V_RST_LOW_RTN

REINFORCED INSULATION

C240 100PF 100V 5%
R367 27 5% 0.75W
D35 BAT46 0.44W
C49 18UF 35V 20%
C414 10UF 35V 10%
C453 100PF 50V 5%

21V +23V_RST_LOW 35B1< 27C5< 29C5< 28C5<
+23V_RST_LOW_RTN 27D5< 29D5< 28D5< 35C1<

C245 100PF 100V 5%

TR2 SUMIDA_545_01_342_00

W2 23V 90mA
W3 23V 30mA
W4 23V 30mA
W5 23V 30mA

R377 27 5% 0.75W
D36 BAT46 0.44W
C54 18UF 35V 20%
C452 100PF 50V 5%
R324 20K 1% 0.1W

21V +23V_RH 27B5<
+23V_RH_RTN 27B5<

C253 100PF 100V 5%
R412 27 5% 0.75W
D37 BAT46 0.44W
C57 18UF 35V 20%
C451 100PF 50V 5%
R333 20K 1% 0.1W

21V +23V_SH 28B5<
+23V_SH_RTN 28B5<

C252 100PF 100V 5%
R418 27 5% 0.75W
D95 BAT46 0.44W
C58 18UF 35V 20%
C450 100PF 50V 5%
R323 20K 1% 0.1W

21V +23V_TH 29B5<
+23V_TH_RTN 29B5<

WARNING

THIS WORK AND THE INFORMATION IT CONTAINS ARE THE PROPERTY OF OTIS ELEVATOR COMPANY (OTIS). IT IS DELIVERED TO OTHERS ON THE EXPRESS CONDITION THAT IT WILL BE USED ONLY FOR, OR ON BEHALF OF, OTIS; THAT NEITHER IT NOR THE INFORMATION IT CONTAINS WILL BE REPRODUCED OR DISCLOSED, IN WHOLE OR IN PART, WITHOUT THE PRIOR WRITTEN CONSENT OF OTIS; AND THAT ON DEMAND IT AND ANY COPIES WILL BE PROMPTLY RETURNED TO OTIS.

UNPUBLISHED WORK © OTIS ELEVATOR COMPANY

ALL RIGHTS RESERVED.

DWG KAA26800ACP

OTIS ENGINEERING CENTER
CHANGWON, KOREA

CHANGES

2017-08-21 REVISED. SEE KAA26800ACP_CDOC.DOC FOR DETAILS (CN1037523) MILLETT S / MAGDA RF

OTIS United Technologies

HVPB
(High Voltage Power Board)
OVFR03A-406

DRAWN	S. MILLETT	ORIGINAL DATE	2017-01-06
CHK	W. HUANG		
APPD	R. MAGDA	SHEETS	
AUTH	CN897873	SHEET	35

DRAFTED IN ACCORDANCE WITH OTIS DOCUMENT 52847

CR-36 : @KAA26800ACP_LIB.KAA26800ACP_LIB(SCH_1):PAGE36

A3

COVERTER IGBT MODULES

ROOM = CONVERTER

31A6< 30A6< 29A6< 28A6< 27A6< 9A1< 7A2< 37A2< 32A6< DC_BUS+

37B2< 9D2< 7D2< DC_BUS-

R-PHASE

U21
SKiiP26GB12T4V1

27A6< CNV_G1 G1
27B6< CNV_E1 E1
27C6< CNV_G2 G2
27D6< CNV_E2 E2
DUMMY_P36_1 +T
DUMMY_P36_2 -T

+DC, AC, -DC

S-PHASE

U18
SKiiP26GB12T4V1

28A6< CNV_G3 G1
28B6< CNV_E3 E1
28C6< CNV_G4 G2
28D6< CNV_E4 E2
+T
-T

NTC_C1 38C1<
NTC_C2 38C1<

+DC, AC, -DC

T-PHASE

U22
SKiiP26GB12T4V1

29A6< CNV_G5 G1
29B6< CNV_E5 E1
29C6< CNV_G6 G2
29D6< CNV_E6 E2
DUMMY_P36_3 +T
DUMMY_P36_4 -T

+DC, AC, -DC

[FROM LINE REACTOR]

27C6< 10A4> CNV_R
28C6< 10B4> CNV_S
29C6< 10C4<> CNV_T

IGBTS ARE PART OF MECHANICAL ASSEMBLY

ASSEMBLY_SEC1=NO
ASSEMBLY_SEC2=NO
ASSEMBLY_SEC3=NO
ASSEMBLY_SEC4=NO

ASSEMBLY_SEC1=NO
ASSEMBLY_SEC2=NO
ASSEMBLY_SEC3=NO
ASSEMBLY_SEC4=NO

ASSEMBLY_SEC1=NO
ASSEMBLY_SEC2=NO
ASSEMBLY_SEC3=NO
ASSEMBLY_SEC4=NO

ROOM=CONVERTER
ROOM=CONVERTER
ROOM=CONVERTER

WARNING

THIS WORK AND THE INFORMATION IT CONTAINS ARE THE PROPERTY OF OTIS ELEVATOR COMPANY (OTIS). **IT IS DELIVERED** TO OTHERS ON THE EXPRESS CONDITION THAT IT WILL BE USED ONLY FOR, OR ON BEHALF OF, OTIS; THAT NEITHER IT NOR THE INFORMATION IT CONTAINS WILL BE REPRODUCED OR DISCLOSED, IN WHOLE OR IN PART, WITHOUT THE PRIOR WRITTEN CONSENT OF OTIS; AND THAT ON DEMAND IT AND ANY COPIES WILL BE PROMPTLY RETURNED TO OTIS.

UNPUBLISHED WORK © OTIS ELEVATOR COMPANY

ALL RIGHTS RESERVED.

DWG KAA26800ACP

OTIS ENGINEERING CENTER
CHANGWON, KOREA

CHANGES

2017-08-21 REVISED. SEE KAA26800ACP_CDOC.DOC FOR DETAILS (CN1037523) MILLETT S / MAGDA RF

OTIS
United Technologies

HVPB
(High Voltage Power Board)
OVFR03A-406

DRAWN	S. MILLETT	ORIGINAL DATE	2017-01-06
CHK	W. HUANG		
APPD	R. MAGDA	SHEETS	
AUTH	CN897873	SHEET	36

DRAFTED IN ACCORDANCE WITH OTIS DOCUMENT 52847

CR-37 : @KAA26800ACP_LIB,KAA26800ACP_LIB(SCH_1):PAGE37

A3

INVERTER IGBT MODULES

ROOM = INVERTER

PER EN81-50

ROOM=INVERTER ROOM=INVERTER ROOM=INVERTER ROOM=INVERTER

30A6< 29A6< 28A6< 27A6< 9A1< 7A2< DC_BUS+
36A2< 32A6< 31A6<

C46 2UF 1100VDC 10%

C78 2UF 1100VDC 10%

C63 2UF 1100VDC 10%

C53 2UF 1100VDC 10%

36B2< 9D2< 7D2< DC_BUS-

U-PHASE

U54
SKiiP26GB12T4V1

30A6< INV_G1 G1 → G1
30B6< INV_E1 E1 → E1
30C6< INV_G2 G2 → G2
30D6< INV_E2 E2 → E2
DUMMY_P37_1 +T → +T
DUMMY_P37_2 -T → -T
+DC → +DC
AC → AC
-DC → -DC

ROOM=INVERTER

[TO INV CURRENT SENSOR]

30C6< 11B3< INV_U1

V-PHASE

U49
SKiiP26GB12T4V1

31A6< INV_G3 G1 → G1
31B6< INV_E3 E1 → E1
31C6< INV_G4 G2 → G2
31D6< INV_E4 E2 → E2
+T → +T
-T → -T
+DC → +DC
AC → AC
-DC → -DC

NTC_I1 38A1<
NTC_I2 38B1<

PER EN81-50

ROOM=INVERTER

31C6< 11C3< INV_V1

W-PHASE

U55
SKiiP26GB12T4V1

32A6< INV_G5 G1 → G1
32B6< INV_E5 E1 → E1
32C6< INV_G6 G2 → G2
32D6< INV_E6 E2 → E2
DUMMY_P37_3 +T → +T
DUMMY_P37_4 -T → -T
+DC → +DC
AC → AC
-DC → -DC

ROOM=INVERTER

32C6< 11D3< INV_W1

IGBTS ARE PART OF MECHANICAL ASSEMBLY

ASSEMBLY_SEC1=NO	ASSEMBLY_SEC1=NO	ASSEMBLY_SEC1=NO
ASSEMBLY_SEC2=NO	ASSEMBLY_SEC2=NO	ASSEMBLY_SEC2=NO
ASSEMBLY_SEC3=NO	ASSEMBLY_SEC3=NO	ASSEMBLY_SEC3=NO
ASSEMBLY_SEC4=NO	ASSEMBLY_SEC4=NO	ASSEMBLY_SEC4=NO

WARNING

THIS WORK AND THE INFORMATION IT CONTAINS ARE THE PROPERTY OF OTIS ELEVATOR COMPANY (OTIS). IT IS DELIVERED TO OTHERS ON THE EXPRESS CONDITION THAT IT WILL BE USED ONLY FOR, OR ON BEHALF OF, OTIS; THAT NEITHER IT NOR THE INFORMATION IT CONTAINS WILL BE REPRODUCED OR DISCLOSED, IN WHOLE OR IN PART, WITHOUT THE PRIOR WRITTEN CONSENT OF OTIS; AND THAT ON DEMAND IT AND ANY COPIES WILL BE PROMPTLY RETURNED TO OTIS.

UNPUBLISHED WORK © OTIS ELEVATOR COMPANY

ALL RIGHTS RESERVED.

DWG KAA26800ACP

OTIS ENGINEERING CENTER
CHANGWON, KOREA

CHANGES

2017-08-21 REVISED. SEE KAA26800ACP_CDOC.DOC FOR DETAILS (CN1037523) MILLETT S / MAGDA RF

OTIS United Technologies

HVPB
(High Voltage Power Board)
OVFR03A-406

DRAWN	S. MILLETT	ORIGINAL DATE	2017-01-06
CHK	W. HUANG		
APPD	R. MAGDA	SHEETS	
AUTH	CN897873	SHEET	37

DRAFTED IN ACCORDANCE WITH OTIS DOCUMENT 52847

CR-38 : @KAA26800ACP_LIB,KAA26800ACP_LIB(SCH_1):PAGE38

A3

IGBT TEMP SENSING CIRCUIT

[INVERTER PART]
ROOM = INV_TEMP

[CONVERTER PART]
ROOM = CNV_TEMP

REINFORCED INSULATION

ROOM=INV_TEMP
ROOM=INV_TEMP
ROOM=INV_TEMP
ROOM=INV_TEMP
ROOM=INV_TEMP
ROOM=INV_TEMP

ROOM=INV_TEMP
ROOM=INV_TEMP
ROOM=INV_TEMP
ROOM=INV_TEMP
ROOM=INV_TEMP

ROOM=CNV_TEMP
ROOM=CNV_TEMP
ROOM=CNV_TEMP
ROOM=CNV_TEMP
ROOM=CNV_TEMP

ROOM=CNV_TEMP
ROOM=CNV_TEMP
ROOM=CNV_TEMP
ROOM=CNV_TEMP
ROOM=CNV_TEMP
ROOM=CNV_TEMP

ROOM=CNV_TEMP
ROOM=CNV_TEMP
ROOM=CNV_TEMP
ROOM=CNV_TEMP
ROOM=CNV_TEMP
ROOM=CNV_TEMP

ROOM=CNV_TEMP

WARNING

THIS WORK AND THE INFORMATION IT CONTAINS ARE THE PROPERTY OF OTIS ELEVATOR COMPANY (OTIS). **IT IS DELIVERED** TO OTHERS ON THE EXPRESS CONDITION THAT IT WILL BE USED ONLY FOR, OR ON BEHALF OF, OTIS; THAT NEITHER IT NOR THE INFORMATION IT CONTAINS WILL BE REPRODUCED OR DISCLOSED, IN WHOLE OR IN PART, WITHOUT THE PRIOR WRITTEN CONSENT OF OTIS; AND THAT ON DEMAND IT AND ANY COPIES WILL BE PROMPTLY RETURNED TO OTIS.

UNPUBLISHED WORK © OTIS ELEVATOR COMPANY
ALL RIGHTS RESERVED.

DWG KAA26800ACP

OTIS ENGINEERING CENTER
CHANGWON, KOREA

CHANGES

2017-08-21 REVISED. SEE KAA26800ACP_CDOC.DOC FOR DETAILS (CN1037523) MILLETT S / MAGDA RF

OTIS
United Technologies

HVPB
(High Voltage Power Board)
OVFR03A-406

DRAWN	S. MILLETT	ORIGINAL DATE 2017-01-06
CHK	W. HUANG	
APPD	R. MAGDA	SHEETS
AUTH	CN897873	SHEET 38

DRAFTED IN ACCORDANCE WITH OTIS DOCUMENT 52847

A3

EEPROM

ROOM=EEPROM

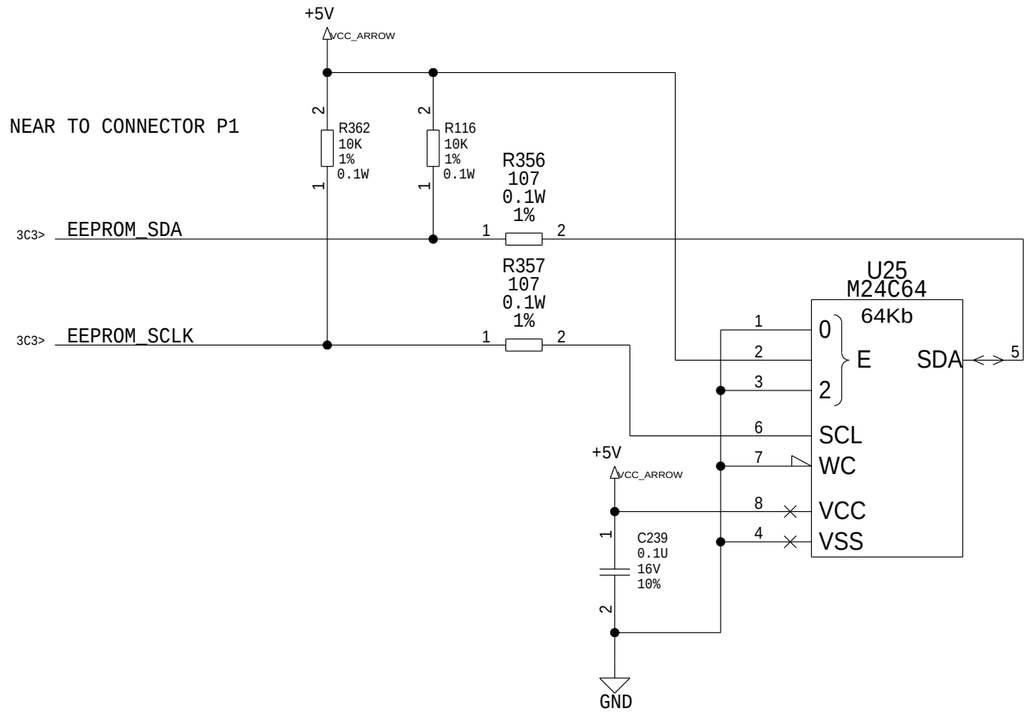

ROOM=EEPROM
ROOM=EEPROM
ROOM=EEPROM
ROOM=EEPROM
ROOM=EEPROM
ROOM=EEPROM

WARNING

THIS WORK AND THE INFORMATION IT CONTAINS ARE THE PROPERTY OF OTIS ELEVATOR COMPANY (OTIS). **IT IS DELIVERED** TO OTHERS ON THE EXPRESS CONDITION THAT IT WILL BE USED ONLY FOR, OR ON BEHALF OF, OTIS; THAT NEITHER IT NOR THE INFORMATION IT CONTAINS WILL BE REPRODUCED OR DISCLOSED, IN WHOLE OR IN PART, WITHOUT THE PRIOR WRITTEN CONSENT OF OTIS; AND THAT ON DEMAND IT AND ANY COPIES WILL BE PROMPTLY RETURNED TO OTIS.

UNPUBLISHED WORK © OTIS ELEVATOR COMPANY
ALL RIGHTS RESERVED.

DWG KAA26800ACP

OTIS ENGINEERING CENTER
CHANGWON, KOREA

CHANGES

2017-08-21 REVISED. SEE KAA26800ACP_CDOC.DOC FOR DETAILS (CN1037523) MILLETT S / MAGDA RF

HVPB
(High Voltage Power Board)
OVFR03A-406

DRAWN	S. MILLETT	ORIGINAL DATE	2017-01-06
CHK	W. HUANG		
APPD	R. MAGDA	SHEETS	
AUTH	CN897873	SHEET	39

DRAFTED IN ACCORDANCE WITH OTIS DOCUMENT 52847

A3

CNV HW OC CIRCUIT

CONVERTER SIDE

ROOM = CNV_HW_OC

CIRCUIT WAS REMOVED BECAUSE OF NO SPACE ON PCBA FOR COMPONENTS

WARNING

THIS WORK AND THE INFORMATION IT CONTAINS ARE THE PROPERTY OF OTIS ELEVATOR COMPANY (OTIS). **IT IS DELIVERED** TO OTHERS ON THE EXPRESS CONDITION THAT IT WILL BE USED ONLY FOR, OR ON BEHALF OF, OTIS; THAT NEITHER IT NOR THE INFORMATION IT CONTAINS WILL BE REPRODUCED OR DISCLOSED, IN WHOLE OR IN PART, WITHOUT THE PRIOR WRITTEN CONSENT OF OTIS; AND THAT ON DEMAND IT AND ANY COPIES WILL BE PROMPTLY RETURNED TO OTIS.

UNPUBLISHED WORK © OTIS ELEVATOR COMPANY

ALL RIGHTS RESERVED.

DWG KAA26800ACP

OTIS ENGINEERING CENTER

CHANGWON, KOREA

CHANGES

2017-08-21 REVISED. SEE KAA26800ACP_CDOC.DOC FOR DETAILS (CN1037523) MILLETT S / MAGDA RF

OTIS

United Technologies

HVPB

(High Voltage Power Board)

OVFR03A-406

DRAWN	S. MILLETT	ORIGINAL DATE	2017-01-06
CHK	W. HUANG		
APPD	R. MAGDA	SHEETS	
AUTH	CN897873	SHEET	40

DRAFTED IN ACCORDANCE WITH OTIS DOCUMENT 52847

CR-41 : @KAA26800ACP_LIB,KAA26800ACP_LIB(SCH_1):PAGE41

A3

ROOM=INV_HW_OC
ROOM=INV_HW_OC
ROOM=INV_HW_OC
ROOM=INV_HW_OC
ROOM=INV_HW_OC
ROOM=INV_HW_OC
ROOM=INV_HW_OC
ROOM=INV_HW_OC
ROOM=INV_HW_OC
ROOM=INV_HW_OC
ROOM=INV_HW_OC
ROOM=INV_HW_OC
ROOM=INV_HW_OC
ROOM=INV_HW_OC
ROOM=INV_HW_OC
ROOM=INV_HW_OC
ROOM=INV_HW_OC
ROOM=INV_HW_OC
ROOM=INV_HW_OC
ROOM=INV_HW_OC
ROOM=INV_HW_OC
ROOM=INV_HW_OC
ROOM=INV_HW_OC
ROOM=INV_HW_OC
ROOM=INV_HW_OC
ROOM=INV_HW_OC

INV HW OC CIRCUIT

INVERTER SIDE
ROOM = INV_HW_OC

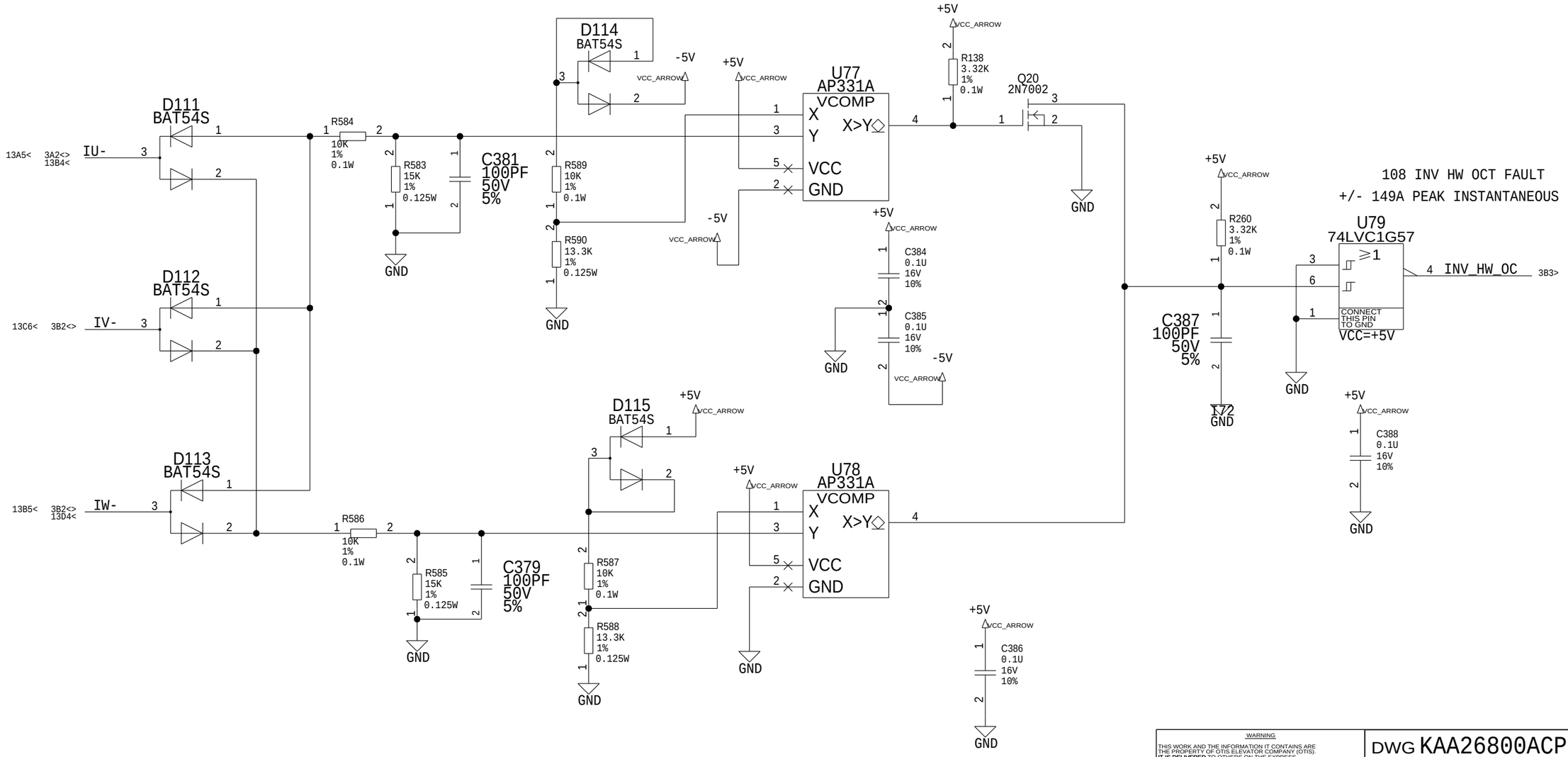

WARNING

THIS WORK AND THE INFORMATION IT CONTAINS ARE THE PROPERTY OF OTIS ELEVATOR COMPANY (OTIS). **IT IS DELIVERED** TO OTHERS ON THE EXPRESS CONDITION THAT IT WILL BE USED ONLY FOR, OR ON BEHALF OF, OTIS, THAT NEITHER IT NOR THE INFORMATION IT CONTAINS WILL BE REPRODUCED OR DISCLOSED, IN WHOLE OR IN PART, WITHOUT THE PRIOR WRITTEN CONSENT OF OTIS, AND THAT ON DEMAND IT AND ANY COPIES WILL BE PROMPTLY RETURNED TO OTIS.

UNPUBLISHED WORK © OTIS ELEVATOR COMPANY

ALL RIGHTS RESERVED.

DWG KAA26800ACP

OTIS ENGINEERING CENTER

CHANGWON, KOREA

CHANGES

2017-08-21 REVISED. SEE KAA26800ACP_CDOC.DOC FOR DETAILS (CN1037523) MILLETT S / MAGDA RF

OTIS
United Technologies

HVPB
(High Voltage Power Board)
OVFR03A-406

DRAWN	S. MILLETT	ORIGINAL DATE	2017-01-06
CHK	W. HUANG		
APPD	R. MAGDA	SHEETS	
AUTH	CN897873	SHEET	41

DRAFTED IN ACCORDANCE WITH OTIS DOCUMENT 52847

A3

Title: Basenet Report
Design: kaa26800acp_lib
Date: Aug 21 10:09:13 2017

Base nets and synonyms for kaa26800acp_lib.KAA26800ACP_LIB(@kaa26800acp_lib.kaa26800acp_lib(sch_1))

Base Signal	Location([Zone][dir])
+5V_DC	8B1< 8C6< 38A2< 38B3< 38B3< 38C3< 38C3< 38D3<
+15V_ENC	3C3< 26B6<
+23V_RH	27B5< 35B6<
+23V_RH_RTN	27B5< 35B6<
+23V_RST_LOW	27C5< 28C5< 29C5< 35A6< 35B1<
+23V_RST_LOW_RTN	27D5< 28D5< 29D5< 35B6< 35C1<
+23V_SH	28B5< 35C6<
+23V_SH_RTN	28B5< 35C6<
+23V_TH	29B5< 35C6<
+23V_TH_RTN	29B5< 35D6<
+23V_UH	30B5< 34C6<
+23V_UH_RTN	30B5< 34D6<
+23V_UVW_LOW	30C5< 31C5< 32C5< 34A6< 34B1<
+23V_UVW_LOW_RTN	30D5< 31D5< 32D5< 34B6< 34C1<
+23V_VH	31B5< 34C6<
+23V_VH_RTN	31B5< 34C6<
+23V_WH	32B5< 34B6<
+23V_WH_RTN	32B5< 34B6<
+24V_P1	3C1<
+30V_GATE	20B6< 33B6<
+30V_GATE_CNV	20B6< 35A1<
+30V_GATE_CNV_RTN	20B6< 35B1< 35C2<
+30V_GATE_INV	20C6< 34A1<
+30V_GATE_INV1	20C5<
+30V_GATE_INV_RTN	20C6< 34B1< 34D1<
+30V_GATE_INV_RTN1	20C4<
+30V_GATE_RTN	20B6< 33C6<
5V_PS	25A1< 25B6<
24V_PS	25B6< 26A1<
24V_RTN_P1	3C1<
24V_RTN_PS	25A6> 25B6< 25C6< 26B1<
AC_R	4A1< 14A4< 14A4<
AC_R2	14D6<
AC_R3	14C6<
AC_S	4A1< 14A4< 14A4<
AC_S2	14C6<
AC_T	4A1< 14B4< 14B4<
AC_T2	14C6<
BIAS_PS	25B5< 25C1<
BIAS_VCC	24B4<
BRK_CHP-/DX	3C1<
BY/BRK_PWM	3C2<
BY1_BY2_NC	3B3> 21A6>
BY1_BY2_NC_IN	20D2< 21A1<
CNV_DEV_FLT	3B6> 18A3<
CNV_E1	27B6< 36B1<
CNV_E2	27D6< 36C1<
CNV_E3	28B6< 36B3<
CNV_E4	28D6< 36C3<
CNV_E5	29B6< 36B4<
CNV_E6	29D6< 36C4<
CNV_FLT*	27B1<> 27C1<> 28B1<> 28C1<> 29B1<> 29C1<> 19C2<
CNV_FLT_FILT	19C3<
CNV_G1	27A6< 36B1<
CNV_G2	27C6< 36C1<
CNV_G3	28A6< 36B3<
CNV_G4	28C6< 36C3<
CNV_G5	29A6< 36B4<
CNV_G6	29C6< 36C4<
CNV_HW_OC	3B5<
CNV_I_R+	10A5< 12A2<
CNV_I_S+	10B5< 12B2<
CNV_I_T+	10C5< 12C4<
CNV_OC_FLT	3B6> 19C5<
CNV_R	10A4> 27C6< 36C1<
CNV_R1	10B2<
CNV_R_REF	10A5> 12B2<
CNV_S	10B4> 28C6< 36C1<
CNV_S1	10B2<
CNV_S_REF	10B5> 12C2<
CNV_T	10C4<> 29C6< 36D1<
CNV_T1	10B2<
CNV_T_REF	10C5> 12C4<
CNV_UVLO*	27B1<> 27C1<> 28B1<> 28C1<> 29B1<> 29C1<> 18A1<
CNV_UVLO_FILT	18A2<
CS1_OUT	10A4<>
CS2_OUT	10C4<>
CS3_OUT	10B4<>
CS4_OUT	11C3<>
CS5_OUT	11A3<>
DBD_2RLY1	20A4<
DBD_2RLY2	20C4<
DBD_IN	3C2< 20A6<
DC_BUS+	7A2< 9A1< 27A6< 28A6< 29A6< 30A6< 31A6< 32A6< 36A2< 37A2<
DC_BUS-	7D2< 9D2< 36B2< 37B2<
DC_SENS+	7B5< 8B1<
DC_SENS-	7C5< 8B1<
DIO_1C/CNV_FLT	3B4<
DIO_2C/CNV_DEV_FLT	3B4<
DIO_3C/PWM_XP	3B4<
DIO_4C/PWM_XN	3B4<
DIO_5C/PWM_YP	3B4<
DIO_6C/PWM_YN	3B4<
DIO_7C/PWM_ZP	3B4<
DIO_8C/PWM_ZN	3B4<
DRAIN	25B5< 25C5<
DUMMY_P14_1	14C3<
DUMMY_P14_2	14C5<
DUMMY_P17_1	17B4>
DUMMY_P20_1	20C1<
DUMMY_P22_4	22C6<>
DUMMY_P26_1	26C2>
DUMMY_P27_5	27B6<
DUMMY_P27_6	27C6<
DUMMY_P27_7	27A5<
DUMMY_P27_8	27C5<
DUMMY_P28_5	28B6<
DUMMY_P28_6	28D6<
DUMMY_P28_7	28A5<
DUMMY_P28_8	28C5<
DUMMY_P29_5	29B6<
DUMMY_P29_6	29C6<
DUMMY_P29_7	29A5<
DUMMY_P29_8	29C5<
DUMMY_P30_5	30B6<
DUMMY_P30_6	30D6<
DUMMY_P30_7	30A5<
DUMMY_P30_8	30C5<
DUMMY_P31_5	31B6<
DUMMY_P31_6	31C6<
DUMMY_P31_7	31A5<
DUMMY_P31_8	31C5<
DUMMY_P32_5	32B6<
DUMMY_P32_6	32D6<
DUMMY_P32_7	32A5<
DUMMY_P32_8	32C5<
DUMMY_P33_2	33B4>
DUMMY_P36_1	36C1<
DUMMY_P36_2	36C1<
DUMMY_P36_3	36C5<
DUMMY_P36_4	36C5<
DUMMY_P37_1	37C1<
DUMMY_P37_2	37C1<
DUMMY_P37_3	37C4<
DUMMY_P37_4	37C4<
DUMMY_U12_11	17B4<
EEPROM_SCLK	3C3> 39B2<
EEPROM_SDA	3C3> 39B2<
ENBL_5V	15B1< 15B4< 19B5< 33B1<
ENC_PS	25B6< 26B3<
ENC_PS_RTN	25A6> 25B6< 26B3<
ENC_RTN	3C3< 26B6<
ERR1/INV_FLT	3B1<
ERR2/S1_S2_NO	3B1<
ERR5/DI_INV1	3B1<
FAN_2.5V	17C4<
FAN_5V	17C3< 17C3< 17C6< 17D4<
FAN_OUT	17A6<
FAN_RTN	17B6< 17B6< 17C1< 17C6< 17D4<
GND_DC	8B1< 8D6< 38B2< 38B3< 38C3< 38C3< 38D2< 38D3<
INV/MX	3C1<
INV_E1	30B6< 37B1<
INV_E2	30D6< 37C1<
INV_E3	31B6< 37B3<
INV_E4	31D6< 37C3<
INV_E5	32B6< 37B5<
INV_E6	32D6< 37C5<
INV_FLT*	30B1<> 30C1<> 31B1<> 31C1<> 32B1<> 32C1<> 19D2<
INV_FLT_FILT	19D3<
INV_G1	30A6< 37B1<
INV_G2	30C6< 37C1<

WARNING

THIS WORK AND THE INFORMATION IT CONTAINS ARE THE PROPERTY OF OTIS ELEVATOR COMPANY (OTIS). **IT IS DELIVERED** TO OTHERS ON THE EXPRESS CONDITION THAT IT WILL BE USED ONLY FOR, OR ON BEHALF OF, OTIS, THAT NEITHER IT NOR THE INFORMATION IT CONTAINS WILL BE REPRODUCED OR DISCLOSED, IN WHOLE OR IN PART, WITHOUT THE PRIOR WRITTEN CONSENT OF OTIS, AND THAT ON DEMAND IT AND ANY COPIES WILL BE PROMPTLY RETURNED TO OTIS.

UNPUBLISHED WORK © OTIS ELEVATOR COMPANY
ALL RIGHTS RESERVED.

DWG KAA26800ACP

OTIS ENGINEERING CENTER
CHANGWON, KOREA

CHANGES

2017-08-21 REVISED. SEE KAA26800ACP_CDOC.DOC FOR DETAILS (CN1037523) MILLETT S / MAGDA RF

OTIS
United Technologies

HVPB
(High Voltage Power Board)
OVFR03A-406

DRAWN	S. MILLETT	ORIGINAL DATE 2017-01-06
CHK	W. HUANG	
APPD	R. MAGDA	SHEETS
AUTH	CN897873	SHEET 42

DRAFTED IN ACCORDANCE WITH OTIS DOCUMENT 52847

A3

INV_G3	31A6< 37B3<
INV_G4	31C6< 37C3<
INV_G5	32A6< 37B5<
INV_G6	32C6< 37C5<
INV_HW_OC	3B3> 41B6>
INV_I_U+	11A2< 13A2<
INV_I_V+	11B2< 13B4<
INV_I_W+	11C2< 13C2<
INV_OC_FLT	3B3> 19D5<
INV_U	11B5<>
INV_U1	11B3< 30C6< 37C1<
INV_UVLO_FILT	18B5<
INV_UVLO_NAND	3B3> 18B6>
INV_UVLO_NOR	3B3> 18C6>
INV_UVLO_UH*	30B1<> 18B1<
INV_UVLO_UL*	30C1<> 18B1<
INV_UVLO_VH*	31B1<> 18C1<
INV_UVLO_VL*	31C1<> 18C1<
INV_UVLO_WH*	32B1<> 18C1<
INV_UVLO_WL*	32C1<> 18C1<
INV_U_REF	11A2> 13B2<
INV_V	11B6<>
INV_V1	11C3< 31C6< 37D1<
INV_V_REF	11B2> 13C4<
INV_W	11B5<>
INV_W1	11D3< 32C6< 37D1<
INV_W_REF	11C2> 13D2<
IP2	25C6<
IR-	3B5<> 12B4< 12B4<
IS-	3B5<> 12B4< 12C4<
IT-	3B6> 12C6<
IU-	3A2<> 13A5< 13B4< 41B1<
IV-	3B2<> 13C6< 41C1<
IW-	3B2<> 13B5< 13D4< 41C1<
LVP_SMPS	17A1< 24A6< 24C1< 25B1< 25B5< 33B2<
MTG_IP4	24C2<
MX	3C3> 15C1<
MX_OUT	14B3< 15B3<
NTC_C1	36C4< 38C1<
NTC_C2	36C4< 38C1<
NTC_I1	37C3< 38A1<
NTC_I2	37C3< 38B1<
OUT_ENBL	3C2< 19A2<
P100_1	20A6<
P100_2	20B6<
P100_MID	20C4<
PFAIL	3B3> 24C6<
PFAIL*	24C5<

PFAIL/DI_INV2	3B1<
PF_IGBT/INV_DEV_FLT	3B1<
PVT_V+	3C1<
PVT_V-	3C1<
PWM_CHK_DRV	3C3> 22C1<
PWM_CHK_LOOP	3B6> 22D1<
PWM_CHK_OUT	22C6<> 23C3<
PWM_EXISTS	3B4< 23B6<
PWM_FAN	3C2< 17D1<
PWM_R_H	3C5< 27A1<
PWM_R_L	3C5< 27C1<
PWM_S_H	3C5< 28A1<
PWM_S_L	3C5< 28C1<
PWM_T_H	3C5< 29A1<
PWM_T_L	3C5< 29C1<
PWM_U+	3B2< 22B1<
PWM_U-	3B2< 22C1<
PWM_U_H	22B6<> 23B2< 30A2<
PWM_U_L	22C6<> 23C2< 30C1<
PWM_V+	3B2< 22C1<
PWM_V-	3B2< 22C1<
PWM_V_H	22C6<> 23C2< 31A2<
PWM_V_L	22C6<> 23D2< 31C2<
PWM_W+	3B2< 22C1<
PWM_W-	3B2< 22C1<
PWM_W_H	22C6<> 23B3< 32A2<
PWM_W_L	22C6<> 23C3< 32C2<
PX	3C2< 15B4<
PX_OUT	14C4< 15B6<
REACTOR_THERMAL_FLT	3B6> 16B6<
SCL0	3C1<
SDA0	3C1<
SFC_2BRAKE	20D1<
SFC_2BRAKE_RTN	20D1<
SFC_2BRK	20C2<
SFC_2PTC	20D3<
SFC_IN	20B2< 21C1<
SFC_IN_MID	20C4<
SFC_OK_2BUFFER*	21C6> 22B3<
SFC_RTN	20B1<
SMPS_MRO+	24B2<
SMPS_MRO-	24B2<
SPARE_A	3B1<
SPARE_B	3B4<>
TEMP_CNV	3B5< 38C6<
TEMP_INV	3B2< 38B6<
T_DBR/BY1_BY2_NC	3B1<
UDC	3B2< 8B6<
V2F_IBR	3C1<
V2F_IDC/V2F_SP1	3B1<
VREF_VAC	4B4< 4C4< 4D4<

	5B6<
VREF_VRST	5B3< 6A4< 6C4<
VRS-	4B5< 6A1<
VRS_OUT-	3B5<> 6B6<
VST-	4C6< 6C1<
VST_OUT-	3B5<> 6C6<
VTR-	4C6<

WARNING

THIS WORK AND THE INFORMATION IT CONTAINS ARE THE PROPERTY OF OTIS ELEVATOR COMPANY (OTIS). **IT IS DELIVERED** TO OTHERS ON THE EXPRESS CONDITION THAT IT WILL BE USED ONLY FOR, OR ON BEHALF OF, OTIS; THAT NEITHER IT NOR THE INFORMATION IT CONTAINS WILL BE REPRODUCED OR DISCLOSED, IN WHOLE OR IN PART, WITHOUT THE PRIOR WRITTEN CONSENT OF OTIS; AND THAT ON DEMAND IT AND ANY COPIES WILL BE PROMPTLY RETURNED TO OTIS.

UNPUBLISHED WORK © OTIS ELEVATOR COMPANY

ALL RIGHTS RESERVED.

DWG KAA26800ACP

OTIS ENGINEERING CENTER

CHANGWON, KOREA

CHANGES

2017-08-21 REVISED. SEE KAA26800ACP_CDOC.DOC FOR DETAILS (CN1037523) MILLETT S / MAGDA RF

OTIS United Technologies

HVPB
(High Voltage Power Board)
OVFR03A-406

DRAWN	S. MILLETT	ORIGINAL DATE	2017-01-06
CHK	W. HUANG		
APPD	R. MAGDA	SHEETS	
AUTH	CN897873	SHEET	43

DRAFTED IN ACCORDANCE WITH OTIS DOCUMENT 52847

Title: Cref Part Report
Design: kaa26800acp_lib
Date: Aug 21 10:09:13 2017

C1	kaa26800acp_lib[10 D4]
C2	kaa26800acp_lib[10 D5]
C3	kaa26800acp_lib[10 B5]
C4	kaa26800acp_lib[10 B5]
C5	kaa26800acp_lib[10 B4]
C6	kaa26800acp_lib[10 B5]
C7	kaa26800acp_lib[10 D5]
C8	kaa26800acp_lib[10 D5]
C9	kaa26800acp_lib[24 B6]
C10	kaa26800acp_lib[24 B6]
C11	kaa26800acp_lib[25 A5]
C12	kaa26800acp_lib[25 B2]
C13	kaa26800acp_lib[25 B1]
C14	kaa26800acp_lib[24 B3]
C15	kaa26800acp_lib[16 B3]
C16	kaa26800acp_lib[10 C5]
C17	kaa26800acp_lib[10 C5]
C18	kaa26800acp_lib[10 C5]
C19	kaa26800acp_lib[10 C4]
C20	kaa26800acp_lib[25 D3]
C21	kaa26800acp_lib[25 D4]
C22	kaa26800acp_lib[24 B6]
C23	kaa26800acp_lib[25 D4]
C24	kaa26800acp_lib[25 C2]
C25	kaa26800acp_lib[25 C1]
C26	kaa26800acp_lib[28 D2]
C27	kaa26800acp_lib[8B 2]
C28	kaa26800acp_lib[28 B2]
C29	kaa26800acp_lib[26 B2]
C30	kaa26800acp_lib[28 B2]
C31	kaa26800acp_lib[29 D2]
C32	kaa26800acp_lib[29 B2]
C33	kaa26800acp_lib[29 B2]
C34	kaa26800acp_lib[25 B4]
C35	kaa26800acp_lib[25 B3]
C36	kaa26800acp_lib[25 B4]
C37	kaa26800acp_lib[26 B4]
C38	kaa26800acp_lib[25 A2]
C39	kaa26800acp_lib[17 B6]
C40	kaa26800acp_lib[33 B5]
C41	kaa26800acp_lib[29 A4]
C42	kaa26800acp_lib[17 C5]
C43	kaa26800acp_lib[17 C5]
C44	kaa26800acp_lib[25 A2]
C45	kaa26800acp_lib[17 A5]
C46	kaa26800acp_lib[37 B3]
C47	kaa26800acp_lib[19 C3]
C48	kaa26800acp_lib[18 A2]
C49	kaa26800acp_lib[35 B6]
C50	kaa26800acp_lib[35 C1]
C51	kaa26800acp_lib[35 C2]
C52	kaa26800acp_lib[35 C3]
C53	kaa26800acp_lib[37 B6]
C54	kaa26800acp_lib[35 B6]
C55	kaa26800acp_lib[22 A2]
C56	kaa26800acp_lib[35 A2]
C57	kaa26800acp_lib[35 C6]
C58	kaa26800acp_lib[35 D6]
C59	kaa26800acp_lib[18 B6]
C60	kaa26800acp_lib[18 B5]
C61	kaa26800acp_lib[18 D3]
C62	kaa26800acp_lib[16 B5]
C63	kaa26800acp_lib[37 B5]
C64	kaa26800acp_lib[24 C6]
C65	kaa26800acp_lib[19 D4]
C66	kaa26800acp_lib[34 A5]
C67	kaa26800acp_lib[34 C1]
C68	kaa26800acp_lib[34 C2]
C69	kaa26800acp_lib[34 C2]
C70	kaa26800acp_lib[8C 1]
C71	kaa26800acp_lib[34 A2]
C72	kaa26800acp_lib[34 A3]
C73	kaa26800acp_lib[34 B6]
C74	kaa26800acp_lib[8C 1]
C75	kaa26800acp_lib[12 C3]
C76	kaa26800acp_lib[38 C5]
C77	kaa26800acp_lib[38 B5]
C78	kaa26800acp_lib[37 B4]
C79	kaa26800acp_lib[34 C6]
C80	kaa26800acp_lib[8B 4]
C81	kaa26800acp_lib[8C 4]
C82	kaa26800acp_lib[8C 4]
C83	kaa26800acp_lib[8B 2]
C84	kaa26800acp_lib[8B 2]
C85	kaa26800acp_lib[26 C4]
C86	kaa26800acp_lib[26 B3]
C87	kaa26800acp_lib[26 B3]
C88	kaa26800acp_lib[5B 2]
C89	kaa26800acp_lib[5B 2]
C90	kaa26800acp_lib[6B 5]
C91	kaa26800acp_lib[6C 6]
C92	kaa26800acp_lib[6A 4]
C93	kaa26800acp_lib[6C 3]
C94	kaa26800acp_lib[31 C4]
C95	kaa26800acp_lib[31 A4]
C96	kaa26800acp_lib[30 A4]
C97	kaa26800acp_lib[6B 3]
C98	kaa26800acp_lib[6D 3]
C99	kaa26800acp_lib[34 D6]
C100	kaa26800acp_lib[5C 1]
C101	kaa26800acp_lib[31 D2]
C102	kaa26800acp_lib[31 B2]
C103	kaa26800acp_lib[31 B2]
C104	kaa26800acp_lib[6B 1]
C105	kaa26800acp_lib[6B 1]
C106	kaa26800acp_lib[6B 1]
C107	kaa26800acp_lib[6D 1]
C108	kaa26800acp_lib[6D 1]
C109	kaa26800acp_lib[6C 2]
C110	kaa26800acp_lib[30 B2]
C111	kaa26800acp_lib[30 B2]
C112	kaa26800acp_lib[5C 4]
C113	kaa26800acp_lib[5B 5]
C114	kaa26800acp_lib[21 B3]
C115	kaa26800acp_lib[30 C4]
C116	kaa26800acp_lib[32 C4]
C117	kaa26800acp_lib[5C 4]
C118	kaa26800acp_lib[4B 6]
C119	kaa26800acp_lib[32 B2]
C120	kaa26800acp_lib[4C

WARNING

THIS WORK AND THE INFORMATION IT CONTAINS ARE THE PROPERTY OF OTIS ELEVATOR COMPANY (OTIS). **IT IS DELIVERED** TO OTHERS ON THE EXPRESS CONDITION THAT IT WILL BE USED ONLY FOR, OR ON BEHALF OF, OTIS; THAT NEITHER IT NOR THE INFORMATION IT CONTAINS WILL BE REPRODUCED OR DISCLOSED, IN WHOLE OR IN PART, WITHOUT THE PRIOR WRITTEN CONSENT OF OTIS; AND THAT ON DEMAND IT AND ANY COPIES WILL BE PROMPTLY RETURNED TO OTIS.

UNPUBLISHED WORK © OTIS ELEVATOR COMPANY
ALL RIGHTS RESERVED.

DWG KAA26800ACP

OTIS ENGINEERING CENTER
CHANGWON, KOREA

CHANGES

2017-08-21 REVISED. SEE KAA26800ACP_CDOC.DOC FOR DETAILS (CN1037523) MILLETT S / MAGDA RF

OTIS
United Technologies

HVPB
(High Voltage Power Board)
OVFR03A-406

DRAWN	S. MILLETT	ORIGINAL DATE	2017-01-06
CHK	W. HUANG		
APPD	R. MAGDA	SHEETS	
AUTH	CN897873	SHEET	44

DRAFTED IN ACCORDANCE WITH OTIS DOCUMENT 52847

A3

	3]
C121	kaa26800acp_lib[30 D2]
C122	kaa26800acp_lib[30 D2]
C123	kaa26800acp_lib[32 A4]
C124	kaa26800acp_lib[4C 3]
C125	kaa26800acp_lib[13 A3]
C126	kaa26800acp_lib[13 D3]
C127	kaa26800acp_lib[13 C5]
C128	kaa26800acp_lib[13 B6]
C129	kaa26800acp_lib[32 D2]
C130	kaa26800acp_lib[11 D2]
C131	kaa26800acp_lib[11 B2]
C132	kaa26800acp_lib[11 D2]
C133	kaa26800acp_lib[11 B2]
C134	kaa26800acp_lib[11 D2]
C135	kaa26800acp_lib[11 B2]
C136	kaa26800acp_lib[11 D2]
C137	kaa26800acp_lib[11 B2]
C138	kaa26800acp_lib[21 C2]
C140	kaa26800acp_lib[11 C2]
C141	kaa26800acp_lib[11 C2]
C142	kaa26800acp_lib[11 C2]
C143	kaa26800acp_lib[11 C2]
C144	kaa26800acp_lib[20 B3]
C145	kaa26800acp_lib[17 B6]
C146	kaa26800acp_lib[17 B6]
C147	kaa26800acp_lib[17 B6]
C148	kaa26800acp_lib[25 B5]
C149	kaa26800acp_lib[25 D4]
C150	kaa26800acp_lib[25 C2]
C151	kaa26800acp_lib[28 C4]
C152	kaa26800acp_lib[28 D2]
C153	kaa26800acp_lib[25 D3]
C154	kaa26800acp_lib[28 D4]
C155	kaa26800acp_lib[28 D4]
C156	kaa26800acp_lib[24 B5]
C157	kaa26800acp_lib[24 B5]
C158	kaa26800acp_lib[24 B5]
C159	kaa26800acp_lib[24 D3]
C160	kaa26800acp_lib[28 D4]
C161	kaa26800acp_lib[28 D4]
C162	kaa26800acp_lib[26 A3]
C163	kaa26800acp_lib[29 D2]
C164	kaa26800acp_lib[26 B1]
C165	kaa26800acp_lib[24 D4]
C166	kaa26800acp_lib[24 D3]
C167	kaa26800acp_lib[26 B3]
C168	kaa26800acp_lib[27 B2]
C169	kaa26800acp_lib[25 A2]
C170	kaa26800acp_lib[33 C2]
C171	kaa26800acp_lib[27 B2]
C172	kaa26800acp_lib[25
	B4]
C173	kaa26800acp_lib[29 D4]
C174	kaa26800acp_lib[28 B4]
C175	kaa26800acp_lib[25 B4]
C176	kaa26800acp_lib[26 B4]
C177	kaa26800acp_lib[29 D4]
C178	kaa26800acp_lib[28 B4]
C179	kaa26800acp_lib[17 B2]
C180	kaa26800acp_lib[27 B4]
C181	kaa26800acp_lib[17 C4]
C182	kaa26800acp_lib[29 B4]
C183	kaa26800acp_lib[28 B4]
C184	kaa26800acp_lib[29 D4]
C185	kaa26800acp_lib[27 B4]
C186	kaa26800acp_lib[33 C3]
C187	kaa26800acp_lib[29 B4]
C188	kaa26800acp_lib[25 A3]
C189	kaa26800acp_lib[28 B4]
C190	kaa26800acp_lib[29 D4]
C191	kaa26800acp_lib[29 C4]
C192	kaa26800acp_lib[17 C4]
C193	kaa26800acp_lib[17 B3]
C194	kaa26800acp_lib[33 B6]
C195	kaa26800acp_lib[27 B4]
C196	kaa26800acp_lib[27 A4]
C197	kaa26800acp_lib[25 A3]
C198	kaa26800acp_lib[28 A4]
C199	kaa26800acp_lib[27 B4]
C200	kaa26800acp_lib[17 C2]
C201	kaa26800acp_lib[29 B4]
C202	kaa26800acp_lib[33 B5]
C203	kaa26800acp_lib[25 A4]
C204	kaa26800acp_lib[17 D4]
C205	kaa26800acp_lib[17 C5]
C206	kaa26800acp_lib[29 B4]
C207	kaa26800acp_lib[17 C3]
C208	kaa26800acp_lib[17 C2]
C209	kaa26800acp_lib[26 B5]
C210	kaa26800acp_lib[25 A3]
C211	kaa26800acp_lib[26 B6]
C212	kaa26800acp_lib[26 B6]
C213	kaa26800acp_lib[27 D2]
C214	kaa26800acp_lib[27 D2]
C215	kaa26800acp_lib[27 D4]
C216	kaa26800acp_lib[9D 1]
C217	kaa26800acp_lib[27 D4]
C218	kaa26800acp_lib[27 C4]
C219	kaa26800acp_lib[9D 3]
C220	kaa26800acp_lib[27 C4]
C221	kaa26800acp_lib[27
	C4]
C222	kaa26800acp_lib[29 D2]
C223	kaa26800acp_lib[29 B2]
C224	kaa26800acp_lib[29 D1]
C225	kaa26800acp_lib[29 B1]
C226	kaa26800acp_lib[28 D2]
C227	kaa26800acp_lib[28 B2]
C228	kaa26800acp_lib[28 D1]
C229	kaa26800acp_lib[28 B1]
C230	kaa26800acp_lib[27 C2]
C231	kaa26800acp_lib[27 B2]
C232	kaa26800acp_lib[27 C1]
C233	kaa26800acp_lib[27 B1]
C234	kaa26800acp_lib[18 B3]
C235	kaa26800acp_lib[19 C4]
C236	kaa26800acp_lib[7B 4]
C237	kaa26800acp_lib[19 A5]
C238	kaa26800acp_lib[19 B3]
C239	kaa26800acp_lib[39 C3]
C240	kaa26800acp_lib[35 A6]
C241	kaa26800acp_lib[35 C3]
C242	kaa26800acp_lib[23 B6]
C243	kaa26800acp_lib[23 A4]
C244	kaa26800acp_lib[23 D4]

WARNING

THIS WORK AND THE INFORMATION IT CONTAINS ARE THE PROPERTY OF OTIS ELEVATOR COMPANY (OTIS). **IT IS DELIVERED** TO OTHERS ON THE EXPRESS CONDITION THAT IT WILL BE USED ONLY FOR, OR ON BEHALF OF, OTIS; THAT NEITHER IT NOR THE INFORMATION IT CONTAINS WILL BE REPRODUCED OR DISCLOSED, IN WHOLE OR IN PART, WITHOUT THE PRIOR WRITTEN CONSENT OF OTIS; AND THAT ON DEMAND IT AND ANY COPIES WILL BE PROMPTLY RETURNED TO OTIS.

UNPUBLISHED WORK © OTIS ELEVATOR COMPANY
ALL RIGHTS RESERVED.

DWG KAA26800ACP

OTIS ENGINEERING CENTER
CHANGWON, KOREA

CHANGES

2017-08-21 REVISED. SEE KAA26800ACP_CDOC.DOC FOR DETAILS (CN1037523) MILLETT S / MAGDA RF

OTIS
United Technologies

HVPB
(High Voltage Power Board)
OVFR03A-406

DRAWN	S. MILLETT	ORIGINAL DATE	2017-01-06
CHK	W. HUANG		
APPD	R. MAGDA	SHEETS	
AUTH	CN897873	SHEET	45

DRAFTED IN ACCORDANCE WITH OTIS DOCUMENT 52847

A3

C245	kaa26800acp_lib[35 B6]
C246	kaa26800acp_lib[35 A2]
C247	kaa26800acp_lib[35 A2]
C248	kaa26800acp_lib[35 B3]
C249	kaa26800acp_lib[22 B6]
C250	kaa26800acp_lib[35 A2]
C251	kaa26800acp_lib[35 A4]
C252	kaa26800acp_lib[35 C6]
C253	kaa26800acp_lib[35 C6]
C254	kaa26800acp_lib[18 C2]
C255	kaa26800acp_lib[18 C2]
C256	kaa26800acp_lib[18 C3]
C257	kaa26800acp_lib[18 B5]
C258	kaa26800acp_lib[21 C5]
C259	kaa26800acp_lib[21 C6]
C260	kaa26800acp_lib[18 C3]
C261	kaa26800acp_lib[18 C2]
C262	kaa26800acp_lib[18 C2]
C263	kaa26800acp_lib[18 C5]
C264	kaa26800acp_lib[32 D2]
C265	kaa26800acp_lib[32 B2]
C266	kaa26800acp_lib[31 C2]
C267	kaa26800acp_lib[30 D2]
C268	kaa26800acp_lib[31 B2]
C269	kaa26800acp_lib[30 B2]
C270	kaa26800acp_lib[32 D1]
C271	kaa26800acp_lib[32 B1]
C272	kaa26800acp_lib[31 C1]
C273	kaa26800acp_lib[30 D1]
C274	kaa26800acp_lib[31 B1]
C275	kaa26800acp_lib[30 B1]
C276	kaa26800acp_lib[19 D3]
C277	kaa26800acp_lib[34 A5]
C278	kaa26800acp_lib[34 C3]
C279	kaa26800acp_lib[12 C6]
C280	kaa26800acp_lib[12 C5]
C281	kaa26800acp_lib[6B 2]
C282	kaa26800acp_lib[6C 2]
C283	kaa26800acp_lib[12 A6]
C284	kaa26800acp_lib[34 B3]
C285	kaa26800acp_lib[12 B3]
C286	kaa26800acp_lib[12 A6]
C287	kaa26800acp_lib[34 B6]
C288	kaa26800acp_lib[34 A2]
C289	kaa26800acp_lib[34 A2]
C290	kaa26800acp_lib[12 B3]
C291	kaa26800acp_lib[12 A3]
C292	kaa26800acp_lib[34 A4]
C293	kaa26800acp_lib[38 A6]
C294	kaa26800acp_lib[38 C6]
C295	kaa26800acp_lib[38 D4]
C296	kaa26800acp_lib[38 B4]
C297	kaa26800acp_lib[8B 3]
C298	kaa26800acp_lib[34 B6]
C299	kaa26800acp_lib[38 D5]
C300	kaa26800acp_lib[38 B4]
C301	kaa26800acp_lib[8B 3]
C302	kaa26800acp_lib[8A 5]
C303	kaa26800acp_lib[8A 5]
C304	kaa26800acp_lib[38 B3]
C305	kaa26800acp_lib[38 D3]
C306	kaa26800acp_lib[26 C4]
C307	kaa26800acp_lib[38 C3]
C308	kaa26800acp_lib[38 B3]
C309	kaa26800acp_lib[8B 2]
C310	kaa26800acp_lib[8C 6]
C311	kaa26800acp_lib[38 C2]
C312	kaa26800acp_lib[38 B2]
C313	kaa26800acp_lib[38 B3]
C314	kaa26800acp_lib[38 D3]
C315	kaa26800acp_lib[26 C5]
C316	kaa26800acp_lib[26 C5]
C317	kaa26800acp_lib[26 B3]
C318	kaa26800acp_lib[15 C2]
C319	kaa26800acp_lib[15 C4]
C320	kaa26800acp_lib[6A 6]
C321	kaa26800acp_lib[6B 6]
C322	kaa26800acp_lib[6B 6]
C323	kaa26800acp_lib[6D 5]
C324	kaa26800acp_lib[6C 4]
C325	kaa26800acp_lib[6B 3]
C326	kaa26800acp_lib[7B 4]
C327	kaa26800acp_lib[31 D4]
C328	kaa26800acp_lib[34 C6]
C329	kaa26800acp_lib[31 B4]
C330	kaa26800acp_lib[6B 3]
C331	kaa26800acp_lib[6D 3]
C332	kaa26800acp_lib[31 D4]
C333	kaa26800acp_lib[31 B4]
C334	kaa26800acp_lib[5C 1]
C335	kaa26800acp_lib[30 B4]
C336	kaa26800acp_lib[31 D4]
C337	kaa26800acp_lib[31 B4]
C338	kaa26800acp_lib[30 B4]
C339	kaa26800acp_lib[31 D4]
C340	kaa26800acp_lib[31 B4]
C341	kaa26800acp_lib[30 B4]
C342	kaa26800acp_lib[30 B4]
C343	kaa26800acp_lib[21 B6]
C344	kaa26800acp_lib[31 D2]
C345	kaa26800acp_lib[21 B5]
C346	kaa26800acp_lib[5C 6]
C347	kaa26800acp_lib[5B 6]
C348	kaa26800acp_lib[30 D4]
C349	kaa26800acp_lib[30 D4]
C350	kaa26800acp_lib[30 D4]
C351	kaa26800acp_lib[30 D4]
C352	kaa26800acp_lib[32 B2]
C353	kaa26800acp_lib[32 D4]
C354	kaa26800acp_lib[4C 3]
C355	kaa26800acp_lib[32 D4]
C356	kaa26800acp_lib[32 B4]
C357	kaa26800acp_lib[32 B4]
C358	kaa26800acp_lib[32 B4]
C359	kaa26800acp_lib[32 B4]
C360	kaa26800acp_lib[4C 4]
C361	kaa26800acp_lib[32 D4]
C362	kaa26800acp_lib[13 B3]
C363	kaa26800acp_lib[32 D4]
C364	kaa26800acp_lib[13 A6]
C365	kaa26800acp_lib[13 A6]
C366	kaa26800acp_lib[6D 3]
C367	kaa26800acp_lib[13 C3]
C368	kaa26800acp_lib[32

WARNING

THIS WORK AND THE INFORMATION IT CONTAINS ARE THE PROPERTY OF OTIS ELEVATOR COMPANY (OTIS). **IT IS DELIVERED** TO OTHERS ON THE EXPRESS CONDITION THAT IT WILL BE USED ONLY FOR, OR ON BEHALF OF, OTIS; THAT NEITHER IT NOR THE INFORMATION IT CONTAINS WILL BE REPRODUCED OR DISCLOSED, IN WHOLE OR IN PART, WITHOUT THE PRIOR WRITTEN CONSENT OF OTIS; AND THAT ON DEMAND IT AND ANY COPIES WILL BE PROMPTLY RETURNED TO OTIS.

UNPUBLISHED WORK © OTIS ELEVATOR COMPANY
ALL RIGHTS RESERVED.

DWG KAA26800ACP

OTIS ENGINEERING CENTER
CHANGWON, KOREA

CHANGES

2017-08-21 REVISED. SEE KAA26800ACP_CDOC.DOC FOR DETAILS (CN1037523) MILLETT S / MAGDA RF

OTIS
United Technologies

HVPB
(High Voltage Power Board)
OVFR03A-406

DRAWN	S. MILLETT	ORIGINAL DATE	2017-01-06
CHK	W. HUANG		
APPD	R. MAGDA	SHEETS	
AUTH	CN897873	SHEET	46

DRAFTED IN ACCORDANCE WITH OTIS DOCUMENT 52847

	D2]
C369	kaa26800acp_lib[21 C4]
C370	kaa26800acp_lib[21 C3]
C371	kaa26800acp_lib[25 D2]
C372	kaa26800acp_lib[25 C3]
C373	kaa26800acp_lib[15 C1]
C374	kaa26800acp_lib[15 C4]
C375	kaa26800acp_lib[19 C4]
C376	kaa26800acp_lib[19 D4]
C377	kaa26800acp_lib[25 A3]
C378	kaa26800acp_lib[6B 3]
C379	kaa26800acp_lib[41 C3]
C380	kaa26800acp_lib[6B 6]
C381	kaa26800acp_lib[41 B2]
C382	kaa26800acp_lib[24 C6]
C383	kaa26800acp_lib[4C 5]
C384	kaa26800acp_lib[41 B4]
C385	kaa26800acp_lib[41 C4]
C386	kaa26800acp_lib[41 D4]
C387	kaa26800acp_lib[41 C5]
C388	kaa26800acp_lib[41 C6]
C389	kaa26800acp_lib[5C 2]
C390	kaa26800acp_lib[12 A6]
C391	kaa26800acp_lib[10 D4]
C392	kaa26800acp_lib[10 B4]
C393	kaa26800acp_lib[10 C4]
C394	kaa26800acp_lib[18 A3]
C395	kaa26800acp_lib[8B 2]
C396	kaa26800acp_lib[8A 6]
C397	kaa26800acp_lib[11 B3]
C398	kaa26800acp_lib[11 C3]
C399	kaa26800acp_lib[8C 2]
C400	kaa26800acp_lib[8B 3]
C401	kaa26800acp_lib[11 D3]
C402	kaa26800acp_lib[13 A6]
C403	kaa26800acp_lib[34 A3]
C404	kaa26800acp_lib[33 C1]
C405	kaa26800acp_lib[33 C2]
C406	kaa26800acp_lib[33 B6]
C407	kaa26800acp_lib[28 D4]
C408	kaa26800acp_lib[29 D4]
C409	kaa26800acp_lib[30 D4]
C410	kaa26800acp_lib[31 D4]
C411	kaa26800acp_lib[32 D3]
C412	kaa26800acp_lib[27 D4]
C413	kaa26800acp_lib[35 A3]
C414	kaa26800acp_lib[35 B6]
C415	kaa26800acp_lib[34 A6]
C416	kaa26800acp_lib[16 B3]
C417	kaa26800acp_lib[20 B3]
C419	kaa26800acp_lib[17 A2]
C420	kaa26800acp_lib[25 A6]
C421	kaa26800acp_lib[25 A6]
C422	kaa26800acp_lib[20 B5]
C423	kaa26800acp_lib[20 D5]
C424	kaa26800acp_lib[24 B4]
C425	kaa26800acp_lib[24 A4]
C426	kaa26800acp_lib[25 A2]
C427	kaa26800acp_lib[25 B5]
C428	kaa26800acp_lib[25 C5]
C429	kaa26800acp_lib[25 C2]
C430	kaa26800acp_lib[26 A2]
C431	kaa26800acp_lib[26 A4]
C432	kaa26800acp_lib[26 A3]
C433	kaa26800acp_lib[16 B5]
C434	kaa26800acp_lib[25 C5]
C435	kaa26800acp_lib[27 B6]
C436	kaa26800acp_lib[28 B6]
C437	kaa26800acp_lib[28 D6]
C438	kaa26800acp_lib[29 B6]
C439	kaa26800acp_lib[29 C6]
C440	kaa26800acp_lib[30 B6]
C441	kaa26800acp_lib[30 C6]
C442	kaa26800acp_lib[31 C6]
C443	kaa26800acp_lib[31 B6]
C444	kaa26800acp_lib[32 B6]
C445	kaa26800acp_lib[32 D6]
C446	kaa26800acp_lib[27 C6]
C447	kaa26800acp_lib[26 C3]
C448	kaa26800acp_lib[26 C4]
C449	kaa26800acp_lib[17 B5]
C450	kaa26800acp_lib[35 D6]
C451	kaa26800acp_lib[35 C6]
C452	kaa26800acp_lib[35 B6]
C453	kaa26800acp_lib[35 B6]
C454	kaa26800acp_lib[34 B6]
C455	kaa26800acp_lib[34 C6]
C456	kaa26800acp_lib[34 C6]
C457	kaa26800acp_lib[34 A6]
C458	kaa26800acp_lib[3C 2]
C459	kaa26800acp_lib[3C 3]
C460	kaa26800acp_lib[25 B2]
C461	kaa26800acp_lib[25 A2]
C462	kaa26800acp_lib[34 B1]
C463	kaa26800acp_lib[35 C4]
C464	kaa26800acp_lib[34 C4]
C465	kaa26800acp_lib[25 A5]
CS1	kaa26800acp_lib[10 B4]
CS2	kaa26800acp_lib[10 C4]
CS3	kaa26800acp_lib[10 B4]
CS4	kaa26800acp_lib[11 C3]
CS5	kaa26800acp_lib[11 B3]
CS6	kaa26800acp_lib[11 C3]
D1	kaa26800acp_lib[25 B5]
D2	kaa26800acp_lib[24 A3]
D3	kaa26800acp_lib[28 B5]
D4	kaa26800acp_lib[26 A1]
D5	kaa26800acp_lib[24 B3]
D6	kaa26800acp_lib[25 C2]
D7	kaa26800acp_lib[28 C5]
D8	kaa26800acp_lib[24 B3]
D9	kaa26800acp_lib[29 C2]
D10	kaa26800acp_lib[25 A2]
D11	kaa26800acp_lib[26 B4]
D12	kaa26800acp_lib[29 A2]
D13	kaa26800acp_lib[33 B4]
D14	kaa26800acp_lib[17 A4]
D15	kaa26800acp_lib[25 B4]
D16	kaa26800acp_lib[28 A5]
D17	kaa26800acp_lib[29 A5]
D18	kaa26800acp_lib[27 A5]
D19	kaa26800acp_lib[29 C5]
D20	kaa26800acp_lib[28 A5]
D21	kaa26800acp_lib[29 A5]

WARNING

THIS WORK AND THE INFORMATION IT CONTAINS ARE THE PROPERTY OF OTIS ELEVATOR COMPANY (OTIS). **IT IS DELIVERED** TO OTHERS ON THE EXPRESS CONDITION THAT IT WILL BE USED ONLY FOR, OR ON BEHALF OF, OTIS; THAT NEITHER IT NOR THE INFORMATION IT CONTAINS WILL BE REPRODUCED OR DISCLOSED, IN WHOLE OR IN PART, WITHOUT THE PRIOR WRITTEN CONSENT OF OTIS; AND THAT ON DEMAND IT AND ANY COPIES WILL BE PROMPTLY RETURNED TO OTIS.

UNPUBLISHED WORK © OTIS ELEVATOR COMPANY
ALL RIGHTS RESERVED.

DWG KAA26800ACP

OTIS ENGINEERING CENTER
CHANGWON, KOREA

CHANGES

2017-08-21 REVISED. SEE KAA26800ACP_CDOC.DOC FOR DETAILS (CN1037523) MILLETT S / MAGDA RF

OTIS
United Technologies

HVPB
(High Voltage Power Board)
OVFR03A-406

DRAWN	S. MILLETT	ORIGINAL DATE	2017-01-06
CHK	W. HUANG		
APPD	R. MAGDA	SHEETS	
AUTH	CN897873	SHEET	47

DRAFTED IN ACCORDANCE WITH OTIS DOCUMENT 52847

D22	kaa26800acp_lib[27 A5]
D23	kaa26800acp_lib[29 B5]
D24	kaa26800acp_lib[29 C6]
D25	kaa26800acp_lib[24 C5]
D26	kaa26800acp_lib[28 A6]
D27	kaa26800acp_lib[29 A6]
D28	kaa26800acp_lib[27 A6]
D29	kaa26800acp_lib[27 C2]
D30	kaa26800acp_lib[17 D2]
D31	kaa26800acp_lib[27 C5]
D32	kaa26800acp_lib[27 B5]
D33	kaa26800acp_lib[27 C6]
D34	kaa26800acp_lib[19 A3]
D35	kaa26800acp_lib[35 A5]
D36	kaa26800acp_lib[35 B6]
D37	kaa26800acp_lib[35 C6]
D38	kaa26800acp_lib[34 A5]
D39	kaa26800acp_lib[34 B5]
D40	kaa26800acp_lib[34 C5]
D41	kaa26800acp_lib[8D 3]
D42	kaa26800acp_lib[8C 3]
D43	kaa26800acp_lib[26 C5]
D44	kaa26800acp_lib[30 A6]
D45	kaa26800acp_lib[31 C4]
D46	kaa26800acp_lib[31 A4]
D47	kaa26800acp_lib[31 C6]
D48	kaa26800acp_lib[31 A6]
D49	kaa26800acp_lib[15 B5]
D50	kaa26800acp_lib[34 C5]
D51	kaa26800acp_lib[30 A5]
D52	kaa26800acp_lib[31 B5]
D53	kaa26800acp_lib[31 A5]
D54	kaa26800acp_lib[31 A5]
D55	kaa26800acp_lib[31 C5]
D56	kaa26800acp_lib[30 A4]
D57	kaa26800acp_lib[31 A2]
D58	kaa26800acp_lib[5C 3]
D59	kaa26800acp_lib[5C 3]
D60	kaa26800acp_lib[32 A6]
D61	kaa26800acp_lib[31 C2]
D62	kaa26800acp_lib[32 C4]
D63	kaa26800acp_lib[30 A2]
D64	kaa26800acp_lib[30 C4]
D65	kaa26800acp_lib[32 C6]
D66	kaa26800acp_lib[32 A5]
D67	kaa26800acp_lib[30 C2]
D68	kaa26800acp_lib[32 C5]
D69	kaa26800acp_lib[30 C6]
D70	kaa26800acp_lib[32 A4]
D71	kaa26800acp_lib[32 C5]
D72	kaa26800acp_lib[32 A2]
D73	kaa26800acp_lib[30 B5]
D74	kaa26800acp_lib[30 C5]
D75	kaa26800acp_lib[32 C2]
D76	kaa26800acp_lib[21 C2]
D77	kaa26800acp_lib[21 C2]
D78	kaa26800acp_lib[20 B3]
D79	kaa26800acp_lib[16 B4]
D80	kaa26800acp_lib[24 B3]
D81	kaa26800acp_lib[25 C2]
D82	kaa26800acp_lib[28 C5]
D83	kaa26800acp_lib[28 C4]
D84	kaa26800acp_lib[24 B3]
D85	kaa26800acp_lib[28 C6]
D86	kaa26800acp_lib[28 A2]
D87	kaa26800acp_lib[28 C2]
D88	kaa26800acp_lib[27 A2]
D89	kaa26800acp_lib[29 C4]
D90	kaa26800acp_lib[28 A4]
D91	kaa26800acp_lib[29 A4]
D92	kaa26800acp_lib[27 A4]
D93	kaa26800acp_lib[27 C4]
D94	kaa26800acp_lib[35 B4]
D95	kaa26800acp_lib[35 C5]
D97	kaa26800acp_lib[34 B4]
D98	kaa26800acp_lib[30 A5]
D99	kaa26800acp_lib[15 B2]
D100	kaa26800acp_lib[32 A5]
D101	kaa26800acp_lib[21 B4]
D102	kaa26800acp_lib[14 B4]
D103	kaa26800acp_lib[14 C3]
D104	kaa26800acp_lib[25 C2]
D105	kaa26800acp_lib[3C 4]
D106	kaa26800acp_lib[28 C5]
D107	kaa26800acp_lib[29 B5]
D108	kaa26800acp_lib[29 C5]
D109	kaa26800acp_lib[30 B5]
D110	kaa26800acp_lib[30 C5]
D111	kaa26800acp_lib[41 B2]
D112	kaa26800acp_lib[41 C2]
D113	kaa26800acp_lib[41 C2]
D114	kaa26800acp_lib[41 B3]
D115	kaa26800acp_lib[41 C3]
D116	kaa26800acp_lib[31 A5]
D117	kaa26800acp_lib[31 C5]
D118	kaa26800acp_lib[32 C5]
D119	kaa26800acp_lib[32 B5]
D120	kaa26800acp_lib[27 A5]
D121	kaa26800acp_lib[27 C5]
D122	kaa26800acp_lib[14 C6]
FV1	kaa26800acp_lib[14 C2]
L1	kaa26800acp_lib[16 B3]
L2	kaa26800acp_lib[16 B3]
L3	kaa26800acp_lib[24 A4]
L4	kaa26800acp_lib[33 B4]
L5	kaa26800acp_lib[17 A5]
L6	kaa26800acp_lib[20 B5]
L7	kaa26800acp_lib[20 C5]
L8	kaa26800acp_lib[26 C3]
L9	kaa26800acp_lib[38 A1]
L10	kaa26800acp_lib[38 B1]
L11	kaa26800acp_lib[38 C2]
L12	kaa26800acp_lib[38 C2]
L13	kaa26800acp_lib[21 A2]
L14	kaa26800acp_lib[25 A3]
L15	kaa26800acp_lib[5C 1]
L16	kaa26800acp_lib[5C 1]
L17	kaa26800acp_lib[20 A5]
L18	kaa26800acp_lib[14 B3]
L19	kaa26800acp_lib[14 C3]
L20	kaa26800acp_lib[8C 1]
L21	kaa26800acp_lib[8D 1]
L22	kaa26800acp_lib[21 B2]
L23	kaa26800acp_lib[20

WARNING

THIS WORK AND THE INFORMATION IT CONTAINS ARE THE PROPERTY OF OTIS ELEVATOR COMPANY (OTIS). **IT IS DELIVERED** TO OTHERS ON THE EXPRESS CONDITION THAT IT WILL BE USED ONLY FOR, OR ON BEHALF OF, OTIS; THAT NEITHER IT NOR THE INFORMATION IT CONTAINS WILL BE REPRODUCED OR DISCLOSED, IN WHOLE OR IN PART, WITHOUT THE PRIOR WRITTEN CONSENT OF OTIS; AND THAT ON DEMAND IT AND ANY COPIES WILL BE PROMPTLY RETURNED TO OTIS.

UNPUBLISHED WORK © OTIS ELEVATOR COMPANY
ALL RIGHTS RESERVED.

DWG KAA26800ACP

OTIS ENGINEERING CENTER
CHANGWON, KOREA

CHANGES

2017-08-21 REVISED. SEE KAA26800ACP_CDOC.DOC FOR DETAILS (CN1037523) MILLETT S / MAGDA RF

OTIS
United Technologies

HVPB
(High Voltage Power Board)
OVFR03A-406

DRAWN	S. MILLETT	ORIGINAL DATE	2017-01-06
CHK	W. HUANG		
APPD	R. MAGDA	SHEETS	
AUTH	CN897873	SHEET	48

DRAFTED IN ACCORDANCE WITH OTIS DOCUMENT 52847

	A4]
L24	kaa26800acp_lib[20
	B5]
L25	kaa26800acp_lib[14
	B5]
L26	kaa26800acp_lib[14
	C5]
L27	kaa26800acp_lib[26
	A2]
L28	kaa26800acp_lib[20
	D2]
L29	kaa26800acp_lib[20
	D3]
L30	kaa26800acp_lib[26
	B6]
L31	kaa26800acp_lib[26
	B6]
L32	kaa26800acp_lib[3C
	3]
L33	kaa26800acp_lib[3C
	3]
L34	kaa26800acp_lib[3C
	2]
L35	kaa26800acp_lib[3C
	2]
L36	kaa26800acp_lib[20
	C2]
L37	kaa26800acp_lib[20
	C2]
MTG_IP1	kaa26800acp_lib[25
	C6]
MTG_IP3	kaa26800acp_lib[14
	C2]
MTG_IP4	kaa26800acp_lib[24
	C2]
P1	kaa26800acp_lib[3B
	1]
P2	kaa26800acp_lib[3B
	4]
P4	kaa26800acp_lib[20
	B1]
P10	kaa26800acp_lib[14
	A4]
P12-A	kaa26800acp_lib[17
	A6]
P12-B	kaa26800acp_lib[17
	A6]
P15	kaa26800acp_lib[20
	A5]
P16	kaa26800acp_lib[16
	B1]

P20	kaa26800acp_lib[20
	C1]
P100	kaa26800acp_lib[20
	A6]
P102	kaa26800acp_lib[20
	D1]
P111	kaa26800acp_lib[24
	A1]
Q1	kaa26800acp_lib[25
	C5]
Q2	kaa26800acp_lib[24
	B6]
Q3	kaa26800acp_lib[24
	C5]
Q4	kaa26800acp_lib[17
	B2]
Q5	kaa26800acp_lib[9C
	3]
Q6	kaa26800acp_lib[19
	A4]
Q7	kaa26800acp_lib[23
	C3]
Q8	kaa26800acp_lib[23
	D3]
Q9	kaa26800acp_lib[23
	C4]
Q10	kaa26800acp_lib[15
	C2]
Q11	kaa26800acp_lib[15
	C3]
Q12	kaa26800acp_lib[23
	C4]
Q13	kaa26800acp_lib[23
	B4]
Q14	kaa26800acp_lib[23
	C3]
Q15	kaa26800acp_lib[23
	B3]
Q16	kaa26800acp_lib[15
	C5]
Q17	kaa26800acp_lib[15
	B6]
Q18	kaa26800acp_lib[24
	C6]
Q19	kaa26800acp_lib[34
	B2]
Q20	kaa26800acp_lib[41
	B4]
R1	kaa26800acp_lib[25
	B5]
R2	kaa26800acp_lib[25

	B5]
R3	kaa26800acp_lib[25
	C6]
R4	kaa26800acp_lib[10
	C3]
R5	kaa26800acp_lib[10
	C3]
R6	kaa26800acp_lib[10
	C4]
R7	kaa26800acp_lib[10
	A5]
R8	kaa26800acp_lib[25
	C6]
R9	kaa26800acp_lib[24
	B2]
R10	kaa26800acp_lib[25
	C5]
R11	kaa26800acp_lib[25
	D5]
R12	kaa26800acp_lib[10
	C3]
R13	kaa26800acp_lib[10
	B4]
R14	kaa26800acp_lib[25
	C4]
R15	kaa26800acp_lib[16
	B4]
R16	kaa26800acp_lib[10
	C2]
R17	kaa26800acp_lib[25
	D5]
R18	kaa26800acp_lib[24
	B6]
R19	kaa26800acp_lib[25
	D3]
R20	kaa26800acp_lib[25
	B2]
R21	kaa26800acp_lib[25
	B2]
R22	kaa26800acp_lib[28
	B6]
R23	kaa26800acp_lib[28
	C5]
R24	kaa26800acp_lib[15
	C1]
R25	kaa26800acp_lib[28
	C5]
R26	kaa26800acp_lib[24
	D4]
R27	kaa26800acp_lib[24
	B4]

R28	kaa26800acp_lib[24
	B4]
R29	kaa26800acp_lib[24
	B5]
R30	kaa26800acp_lib[24
	B5]
R31	kaa26800acp_lib[28
	C2]
R32	kaa26800acp_lib[28
	C2]
R33	kaa26800acp_lib[28
	D4]
R34	kaa26800acp_lib[24
	C3]
R35	kaa26800acp_lib[28
	A2]
R36	kaa26800acp_lib[29
	C2]
R37	kaa26800acp_lib[24
	C5]
R38	kaa26800acp_lib[33
	B2]
R39	kaa26800acp_lib[17
	B2]
R40	kaa26800acp_lib[27
	A2]
R41	kaa26800acp_lib[29
	A2]
R42	kaa26800acp_lib[17
	B3]
R43	kaa26800acp_lib[33
	C2]
R44	kaa26800acp_lib[25
	A4]
R46	kaa26800acp_lib[33
	B1]
R47	kaa26800acp_lib[33
	C5]
R48	kaa26800acp_lib[33
	C4]
R49	kaa26800acp_lib[17
	C5]
R50	kaa26800acp_lib[28
	B4]
R51	kaa26800acp_lib[29
	D4]
R52	kaa26800acp_lib[25

	B4]
R53	kaa26800acp_lib[25
	B4]
R54	kaa26800acp_lib[27
	A5]
R55	kaa26800acp_lib[28
	A5]
R56	kaa26800acp_lib[25
	A4]
R57	kaa26800acp_lib[27
	B4]
R58	kaa26800acp_lib[28
	B5]
R59	kaa26800acp_lib[29
	B4]
R60	kaa26800acp_lib[17
	C4]
R61	kaa26800acp_lib[17
	C5]
R62	kaa26800acp_lib[17
	D3]
R63	kaa26800acp_lib[24
	C5]
R64	kaa26800acp_lib[28
	A5]
R65	kaa26800acp_lib[29
	C5]
R66	kaa26800acp_lib[27
	B6]
R67	kaa26800acp_lib[29
	A5]
R68	kaa26800acp_lib[29
	C5]
R69	kaa26800acp_lib[28
	C6]
R70	kaa26800acp_lib[27
	A5]
R71	kaa26800acp_lib[24
	C5]
R72	kaa26800acp_lib[24
	C5]
R73	kaa26800acp_lib[29
	B5]
R74	kaa26800acp_lib[27
	C2]
R75	kaa26800acp_lib[17
	C2]

WARNING

THIS WORK AND THE INFORMATION IT CONTAINS ARE THE PROPERTY OF OTIS ELEVATOR COMPANY (OTIS). **IT IS DELIVERED** TO OTHERS ON THE EXPRESS CONDITION THAT IT WILL BE USED ONLY FOR, OR ON BEHALF OF, OTIS; THAT NEITHER IT NOR THE INFORMATION IT CONTAINS WILL BE REPRODUCED OR DISCLOSED, IN WHOLE OR IN PART, WITHOUT THE PRIOR WRITTEN CONSENT OF OTIS; AND THAT ON DEMAND IT AND ANY COPIES WILL BE PROMPTLY RETURNED TO OTIS.

UNPUBLISHED WORK © OTIS ELEVATOR COMPANY
ALL RIGHTS RESERVED.

DWG KAA26800ACP

OTIS ENGINEERING CENTER
CHANGWON, KOREA

CHANGES

2017-08-21 REVISED. SEE KAA26800ACP_CDOC.DOC FOR DETAILS (CN1037523) MILLETT S / MAGDA RF

HVPB
(High Voltage Power Board)
OVFR03A-406

DRAWN	S. MILLETT	ORIGINAL DATE 2017-01-06
CHK	W. HUANG	
APPD	R. MAGDA	SHEETS
AUTH	CN897873	SHEET 49

DRAFTED IN ACCORDANCE WITH OTIS DOCUMENT 52847

R76	kaa26800acp_lib[17D2]
R77	kaa26800acp_lib[9D1]
R78	kaa26800acp_lib[27C5]
R79	kaa26800acp_lib[29B6]
R80	kaa26800acp_lib[27D4]
R81	kaa26800acp_lib[27B6]
R82	kaa26800acp_lib[29C6]
R83	kaa26800acp_lib[27C5]
R84	kaa26800acp_lib[27C5]
R85	kaa26800acp_lib[29B2]
R86	kaa26800acp_lib[29C2]
R87	kaa26800acp_lib[29B1]
R88	kaa26800acp_lib[29C1]
R89	kaa26800acp_lib[28B1]
R90	kaa26800acp_lib[28C1]
R91	kaa26800acp_lib[28B2]
R92	kaa26800acp_lib[28C2]
R93	kaa26800acp_lib[27B2]
R94	kaa26800acp_lib[27C2]
R95	kaa26800acp_lib[27B1]
R96	kaa26800acp_lib[27C1]
R97	kaa26800acp_lib[19A2]
R98	kaa26800acp_lib[35C1]
R99	kaa26800acp_lib[35B1]
R100	kaa26800acp_lib[35B2]
R101	kaa26800acp_lib[35C3]
R102	kaa26800acp_lib[35B3]
R103	kaa26800acp_lib[35B3]
R104	kaa26800acp_lib[3C4]
R105	kaa26800acp_lib[23B5]
R106	kaa26800acp_lib[23A4]
R107	kaa26800acp_lib[23B4]
R108	kaa26800acp_lib[3C4]
R109	kaa26800acp_lib[3C5]
R110	kaa26800acp_lib[3C5]
R111	kaa26800acp_lib[3C6]
R112	kaa26800acp_lib[3C6]
R113	kaa26800acp_lib[3C6]
R114	kaa26800acp_lib[3C6]
R115	kaa26800acp_lib[22B2]
R116	kaa26800acp_lib[39B3]
R117	kaa26800acp_lib[3C3]
R118	kaa26800acp_lib[16B5]
R119	kaa26800acp_lib[18A3]
R120	kaa26800acp_lib[30B1]
R121	kaa26800acp_lib[31B1]
R122	kaa26800acp_lib[30C1]
R123	kaa26800acp_lib[31C1]
R124	kaa26800acp_lib[32B1]
R125	kaa26800acp_lib[32C1]
R126	kaa26800acp_lib[30B2]
R127	kaa26800acp_lib[31B2]
R128	kaa26800acp_lib[30C2]
R129	kaa26800acp_lib[31C2]
R130	kaa26800acp_lib[32B2]
R131	kaa26800acp_lib[32C2]
R132	kaa26800acp_lib[34B2]
R133	kaa26800acp_lib[34C1]
R134	kaa26800acp_lib[34B1]
R135	kaa26800acp_lib[34C2]
R136	kaa26800acp_lib[34B4]
R137	kaa26800acp_lib[34B4]
R138	kaa26800acp_lib[41B4]
R139	kaa26800acp_lib[12C5]
R140	kaa26800acp_lib[12C4]
R141	kaa26800acp_lib[12B5]
R142	kaa26800acp_lib[12C5]
R143	kaa26800acp_lib[12D3]
R144	kaa26800acp_lib[3B4]
R145	kaa26800acp_lib[12C2]
R146	kaa26800acp_lib[12A3]
R147	kaa26800acp_lib[12B2]
R148	kaa26800acp_lib[11B3]
R149	kaa26800acp_lib[38C5]
R150	kaa26800acp_lib[38C5]
R151	kaa26800acp_lib[38C6]
R152	kaa26800acp_lib[38B5]
R153	kaa26800acp_lib[38B5]
R154	kaa26800acp_lib[8A4]
R155	kaa26800acp_lib[8B4]
R156	kaa26800acp_lib[8B4]
R157	kaa26800acp_lib[26C4]
R158	kaa26800acp_lib[38B2]
R159	kaa26800acp_lib[38C2]
R160	kaa26800acp_lib[38A2]
R161	kaa26800acp_lib[38C2]
R162	kaa26800acp_lib[31C6]
R163	kaa26800acp_lib[6B5]
R164	kaa26800acp_lib[6C5]
R165	kaa26800acp_lib[31B6]
R166	kaa26800acp_lib[30B6]
R167	kaa26800acp_lib[15C5]
R168	kaa26800acp_lib[15B5]
R169	kaa26800acp_lib[31B5]
R170	kaa26800acp_lib[31C5]
R171	kaa26800acp_lib[30A5]
R172	kaa26800acp_lib[31A5]
R173	kaa26800acp_lib[32C6]
R174	kaa26800acp_lib[31C5]
R175	kaa26800acp_lib[6A4]
R176	kaa26800acp_lib[6C4]
R177	kaa26800acp_lib[30B5]
R178	kaa26800acp_lib[32B6]
R179	kaa26800acp_lib[31D4]
R180	kaa26800acp_lib[31B4]
R181	kaa26800acp_lib[31C5]
R182	kaa26800acp_lib[6B3]
R183	kaa26800acp_lib[6A3]
R184	kaa26800acp_lib[6C3]
R185	kaa26800acp_lib[6C3]
R186	kaa26800acp_lib[31A5]
R187	kaa26800acp_lib[30B4]
R188	kaa26800acp_lib[15B6]
R189	kaa26800acp_lib[15B6]
R190	kaa26800acp_lib[30C6]
R191	kaa26800acp_lib[15B2]
R192	kaa26800acp_lib[21A4]
R193	kaa26800acp_lib[31C2]
R194	kaa26800acp_lib[31C2]
R195	kaa26800acp_lib[30C5]
R196	kaa26800acp_lib[31C2]
R197	kaa26800acp_lib[31B2]
R198	kaa26800acp_lib[32A5]
R199	kaa26800acp_lib[30

WARNING

THIS WORK AND THE INFORMATION IT CONTAINS ARE THE PROPERTY OF OTIS ELEVATOR COMPANY (OTIS). **IT IS DELIVERED** TO OTHERS ON THE EXPRESS CONDITION THAT IT WILL BE USED ONLY FOR, OR ON BEHALF OF, OTIS; THAT NEITHER IT NOR THE INFORMATION IT CONTAINS WILL BE REPRODUCED OR DISCLOSED, IN WHOLE OR IN PART, WITHOUT THE PRIOR WRITTEN CONSENT OF OTIS; AND THAT ON DEMAND IT AND ANY COPIES WILL BE PROMPTLY RETURNED TO OTIS.

UNPUBLISHED WORK © OTIS ELEVATOR COMPANY
ALL RIGHTS RESERVED.

DWG KAA26800ACP

OTIS ENGINEERING CENTER
CHANGWON, KOREA

CHANGES

2017-08-21 REVISED. SEE KAA26800ACP_CDOC.DOC FOR DETAILS (CN1037523) MILLETT S / MAGDA RF

OTIS
United Technologies

HVPB
(High Voltage Power Board)
OVFR03A-406

DRAWN	S. MILLETT	ORIGINAL DATE	2017-01-06
CHK	W. HUANG		
APPD	R. MAGDA	SHEETS	
AUTH	CN897873	SHEET	50

DRAFTED IN ACCORDANCE WITH OTIS DOCUMENT 52847

	C5]
R200	kaa26800acp_lib[30 C2]
R201	kaa26800acp_lib[32 C5]
R202	kaa26800acp_lib[21 B2]
R203	kaa26800acp_lib[32 C5]
R204	kaa26800acp_lib[32 A5]
R205	kaa26800acp_lib[30 D4]
R206	kaa26800acp_lib[32 D4]
R207	kaa26800acp_lib[4D 2]
R208	kaa26800acp_lib[4D 2]
R209	kaa26800acp_lib[32 B2]
R210	kaa26800acp_lib[32 A2]
R211	kaa26800acp_lib[32 C4]
R212	kaa26800acp_lib[32 B4]
R213	kaa26800acp_lib[30 C5]
R214	kaa26800acp_lib[32 A2]
R215	kaa26800acp_lib[13 B2]
R216	kaa26800acp_lib[4D 1]
R217	kaa26800acp_lib[4D 4]
R218	kaa26800acp_lib[4D 4]
R219	kaa26800acp_lib[4B 6]
R220	kaa26800acp_lib[13 D2]
R221	kaa26800acp_lib[4B 2]
R222	kaa26800acp_lib[4B 2]
R223	kaa26800acp_lib[4B 2]
R224	kaa26800acp_lib[4B 2]
R225	kaa26800acp_lib[4A 2]
R226	kaa26800acp_lib[13 C5]
R227	kaa26800acp_lib[13 B6]
R228	kaa26800acp_lib[4B 2]
R229	kaa26800acp_lib[4B 2]
R230	kaa26800acp_lib[4B 2]
R231	kaa26800acp_lib[4B 2]
R232	kaa26800acp_lib[4A 2]
R233	kaa26800acp_lib[4B 1]
R234	kaa26800acp_lib[4B 1]
R235	kaa26800acp_lib[4B 1]
R236	kaa26800acp_lib[4B 1]
R237	kaa26800acp_lib[4A 1]
R238	kaa26800acp_lib[32 C2]
R239	kaa26800acp_lib[32 C2]
R240	kaa26800acp_lib[32 C2]
R241	kaa26800acp_lib[14 B6]
R242	kaa26800acp_lib[21 C3]
R243	kaa26800acp_lib[14 B6]
R244	kaa26800acp_lib[21 C4]
R245	kaa26800acp_lib[21 C3]
R246	kaa26800acp_lib[21 C3]
R247	kaa26800acp_lib[14 B5]
R248	kaa26800acp_lib[20 D4]
R249	kaa26800acp_lib[20 C4]
R250	kaa26800acp_lib[20
	C5]
R251	kaa26800acp_lib[14 B5]
R252	kaa26800acp_lib[21 C2]
R253	kaa26800acp_lib[21 C1]
R254	kaa26800acp_lib[20 C5]
R255	kaa26800acp_lib[20 C4]
R256	kaa26800acp_lib[20 C3]
R257	kaa26800acp_lib[20 C2]
R258	kaa26800acp_lib[20 A5]
R259	kaa26800acp_lib[16 B3]
R260	kaa26800acp_lib[41 B5]
R261	kaa26800acp_lib[25 C5]
R262	kaa26800acp_lib[25 C2]
R263	kaa26800acp_lib[24 C2]
R264	kaa26800acp_lib[24 C2]
R265	kaa26800acp_lib[24 C2]
R266	kaa26800acp_lib[24 C3]
R267	kaa26800acp_lib[24 C2]
R268	kaa26800acp_lib[28 C5]
R269	kaa26800acp_lib[15 B4]
R270	kaa26800acp_lib[28 C2]
R271	kaa26800acp_lib[24 D4]
R272	kaa26800acp_lib[28 C5]
R273	kaa26800acp_lib[24 B5]
R274	kaa26800acp_lib[25 C4]
R275	kaa26800acp_lib[17 A1]
R276	kaa26800acp_lib[24 C3]
R277	kaa26800acp_lib[29 C2]
R278	kaa26800acp_lib[28 B2]
R279	kaa26800acp_lib[28 A2]
R280	kaa26800acp_lib[35 C4]
R281	kaa26800acp_lib[27 B2]
R282	kaa26800acp_lib[29 C2]
R283	kaa26800acp_lib[25 A1]
R284	kaa26800acp_lib[17 A3]
R285	kaa26800acp_lib[33 B2]
R286	kaa26800acp_lib[17 A1]
R287	kaa26800acp_lib[27 A2]
R288	kaa26800acp_lib[17 B2]
R289	kaa26800acp_lib[17 B2]
R290	kaa26800acp_lib[33 B2]
R291	kaa26800acp_lib[17 A3]
R292	kaa26800acp_lib[29 B2]
R293	kaa26800acp_lib[29 A2]
R294	kaa26800acp_lib[17 B1]
R295	kaa26800acp_lib[17 B3]
R296	kaa26800acp_lib[33 C2]
R297	kaa26800acp_lib[25 B3]
R298	kaa26800acp_lib[25 B3]
R299	kaa26800acp_lib[17
	B1]
R300	kaa26800acp_lib[17 B3]
R301	kaa26800acp_lib[25 B4]
R302	kaa26800acp_lib[17 B1]
R303	kaa26800acp_lib[17 C3]
R304	kaa26800acp_lib[33 B1]
R305	kaa26800acp_lib[33 C5]
R306	kaa26800acp_lib[33 B5]
R307	kaa26800acp_lib[33 B5]
R308	kaa26800acp_lib[25 B2]
R309	kaa26800acp_lib[17 B5]
R310	kaa26800acp_lib[17 C4]
R311	kaa26800acp_lib[17 B5]
R312	kaa26800acp_lib[17 A5]
R313	kaa26800acp_lib[17 A5]
R314	kaa26800acp_lib[29 C4]
R315	kaa26800acp_lib[29 A5]
R316	kaa26800acp_lib[34 C4]
R317	kaa26800acp_lib[29 C5]
R318	kaa26800acp_lib[17 D4]
R319	kaa26800acp_lib[26 A2]
R320	kaa26800acp_lib[28 B5]
R321	kaa26800acp_lib[27 A5]
R322	kaa26800acp_lib[29 B5]

WARNING

THIS WORK AND THE INFORMATION IT CONTAINS ARE THE PROPERTY OF OTIS ELEVATOR COMPANY (OTIS). **IT IS DELIVERED** TO OTHERS ON THE EXPRESS CONDITION THAT IT WILL BE USED ONLY FOR, OR ON BEHALF OF, OTIS; THAT NEITHER IT NOR THE INFORMATION IT CONTAINS WILL BE REPRODUCED OR DISCLOSED, IN WHOLE OR IN PART, WITHOUT THE PRIOR WRITTEN CONSENT OF OTIS; AND THAT ON DEMAND IT AND ANY COPIES WILL BE PROMPTLY RETURNED TO OTIS.

UNPUBLISHED WORK © OTIS ELEVATOR COMPANY
ALL RIGHTS RESERVED.

DWG KAA26800ACP

OTIS ENGINEERING CENTER
CHANGWON, KOREA

CHANGES

2017-08-21 REVISED. SEE KAA26800ACP_CDOC.DOC FOR DETAILS (CN1037523) MILLETT S / MAGDA RF

HVPB
(High Voltage Power Board)
OVFR03A-406

DRAWN	S. MILLETT	ORIGINAL DATE	2017-01-06
CHK	W. HUANG		
APPD	R. MAGDA	SHEETS	
AUTH	CN897873	SHEET	51

DRAFTED IN ACCORDANCE WITH OTIS DOCUMENT 52847

R323	kaa26800acp_lib[35D6]	R324	kaa26800acp_lib[35B6]	R325	kaa26800acp_lib[28B6]	R326	kaa26800acp_lib[27C2]	R327	kaa26800acp_lib[27C2]
R328	kaa26800acp_lib[9C1]	R329	kaa26800acp_lib[9C2]	R330	kaa26800acp_lib[9A2]	R331	kaa26800acp_lib[9C2]	R332	kaa26800acp_lib[27C5]
R333	kaa26800acp_lib[35C6]	R334	kaa26800acp_lib[9C2]	R335	kaa26800acp_lib[9C4]	R336	kaa26800acp_lib[9C4]	R337	kaa26800acp_lib[27C6]
R338	kaa26800acp_lib[9C2]	R339	kaa26800acp_lib[9A2]	R340	kaa26800acp_lib[9B2]	R341	kaa26800acp_lib[9D4]	R342	kaa26800acp_lib[9D4]
R343	kaa26800acp_lib[18A2]	R344	kaa26800acp_lib[19C2]	R345	kaa26800acp_lib[9B2]	R346	kaa26800acp_lib[9B2]	R347	kaa26800acp_lib[9B2]
R348	kaa26800acp_lib[9B3]	R349	kaa26800acp_lib[9B3]	R350	kaa26800acp_lib[9C3]	R351	kaa26800acp_lib[9C3]	R352	kaa26800acp_lib[9B4]
R353	kaa26800acp_lib[9B4]	R354	kaa26800acp_lib[9C4]	R355	kaa26800acp_lib[9C4]	R356	kaa26800acp_lib[39B3]	R357	kaa26800acp_lib[39B3]
R358	kaa26800acp_lib[19A4]	R359	kaa26800acp_lib[19B4]	R360	kaa26800acp_lib[19A4]	R361	kaa26800acp_lib[35B2]	R362	kaa26800acp_lib[39B3]
R363	kaa26800acp_lib[9B3]	R364	kaa26800acp_lib[9B3]	R365	kaa26800acp_lib[9C4]	R366	kaa26800acp_lib[9C3]	R367	kaa26800acp_lib[35A5]
R368	kaa26800acp_lib[35C3]	R369	kaa26800acp_lib[23B5]	R370	kaa26800acp_lib[23C4]	R371	kaa26800acp_lib[23D2]	R372	kaa26800acp_lib[23C2]
R373	kaa26800acp_lib[9B4]	R374	kaa26800acp_lib[9B3]	R375	kaa26800acp_lib[9C3]	R376	kaa26800acp_lib[9C4]	R377	kaa26800acp_lib[35B5]
R378	kaa26800acp_lib[23C4]	R379	kaa26800acp_lib[23A3]	R380	kaa26800acp_lib[23B4]	R381	kaa26800acp_lib[23C2]	R382	kaa26800acp_lib[23B2]
R383	kaa26800acp_lib[22C4]	R384	kaa26800acp_lib[22C4]	R385	kaa26800acp_lib[22C4]	R386	kaa26800acp_lib[22C4]	R387	kaa26800acp_lib[22C4]
R388	kaa26800acp_lib[22C4]	R389	kaa26800acp_lib[22C5]	R390	kaa26800acp_lib[9B3]	R391	kaa26800acp_lib[9B4]	R392	kaa26800acp_lib[9C3]
R393	kaa26800acp_lib[9C4]	R394	kaa26800acp_lib[35B4]	R395	kaa26800acp_lib[9B4]	R396	kaa26800acp_lib[9B4]	R397	kaa26800acp_lib[9C4]
R398	kaa26800acp_lib[9C3]	R399	kaa26800acp_lib[9A3]	R400	kaa26800acp_lib[9A3]	R401	kaa26800acp_lib[9B4]	R402	kaa26800acp_lib[9B4]
R403	kaa26800acp_lib[22C3]	R404	kaa26800acp_lib[22D2]	R405	kaa26800acp_lib[22C2]	R406	kaa26800acp_lib[22C3]	R407	kaa26800acp_lib[22C3]
R408	kaa26800acp_lib[22B2]	R409	kaa26800acp_lib[22B2]	R410	kaa26800acp_lib[22C5]	R411	kaa26800acp_lib[35A3]	R412	kaa26800acp_lib[35C6]
R413	kaa26800acp_lib[35A4]	R414	kaa26800acp_lib[9A4]	R415	kaa26800acp_lib[9A3]	R416	kaa26800acp_lib[9B4]	R417	kaa26800acp_lib[9B3]
R418	kaa26800acp_lib[35C5]	R419	kaa26800acp_lib[18C2]	R420	kaa26800acp_lib[18C2]	R421	kaa26800acp_lib[18B2]	R422	kaa26800acp_lib[18B5]
R423	kaa26800acp_lib[21C5]	R424	kaa26800acp_lib[18B2]	R425	kaa26800acp_lib[18C2]	R426	kaa26800acp_lib[18C2]	R427	kaa26800acp_lib[18C5]
R428	kaa26800acp_lib[9A3]	R429	kaa26800acp_lib[9A4]	R430	kaa26800acp_lib[9B3]	R431	kaa26800acp_lib[9B4]	R432	kaa26800acp_lib[19D2]
R433	kaa26800acp_lib[9A4]	R434	kaa26800acp_lib[9A3]	R435	kaa26800acp_lib[9B4]	R436	kaa26800acp_lib[9B3]	R437	kaa26800acp_lib[34B2]
R438	kaa26800acp_lib[34A5]	R439	kaa26800acp_lib[34C3]	R440	kaa26800acp_lib[9A4]	R441	kaa26800acp_lib[9A4]	R442	kaa26800acp_lib[9B3]
R443	kaa26800acp_lib[9B3]	R444	kaa26800acp_lib[12C6]	R445	kaa26800acp_lib[12B5]	R446	kaa26800acp_lib[34		

WARNING

THIS WORK AND THE INFORMATION IT CONTAINS ARE THE PROPERTY OF OTIS ELEVATOR COMPANY (OTIS). **IT IS DELIVERED** TO OTHERS ON THE EXPRESS CONDITION THAT IT WILL BE USED ONLY FOR, OR ON BEHALF OF, OTIS; THAT NEITHER IT NOR THE INFORMATION IT CONTAINS WILL BE REPRODUCED OR DISCLOSED, IN WHOLE OR IN PART, WITHOUT THE PRIOR WRITTEN CONSENT OF OTIS; AND THAT ON DEMAND IT AND ANY COPIES WILL BE PROMPTLY RETURNED TO OTIS.

UNPUBLISHED WORK © OTIS ELEVATOR COMPANY
ALL RIGHTS RESERVED.

DWG KAA26800ACP

OTIS ENGINEERING CENTER
CHANGWON, KOREA

CHANGES

2017-08-21 REVISED. SEE KAA26800ACP_CDOC.DOC FOR DETAILS (CN1037523) MILLETT S / MAGDA RF

HVPB
(High Voltage Power Board)
OVFR03A-406

DRAWN	S. MILLETT	ORIGINAL DATE	2017-01-06
CHK	W. HUANG		
APPD	R. MAGDA	SHEETS	
AUTH	CN897873	SHEET	52

DRAFTED IN ACCORDANCE WITH OTIS DOCUMENT 52847

A3

	B2]
R447	kaa26800acp_lib[12 A3]
R448	kaa26800acp_lib[12 C3]
R449	kaa26800acp_lib[9A 3]
R450	kaa26800acp_lib[9A 4]
R451	kaa26800acp_lib[9B 3]
R452	kaa26800acp_lib[9B 4]
R453	kaa26800acp_lib[34 B4]
R454	kaa26800acp_lib[12 B2]
R455	kaa26800acp_lib[12 B3]
R456	kaa26800acp_lib[12 B3]
R457	kaa26800acp_lib[34 B5]
R458	kaa26800acp_lib[12 C2]
R459	kaa26800acp_lib[38 C5]
R460	kaa26800acp_lib[34 A3]
R461	kaa26800acp_lib[34 A4]
R462	kaa26800acp_lib[38 A6]
R463	kaa26800acp_lib[38 A5]
R464	kaa26800acp_lib[34 B5]
R465	kaa26800acp_lib[8B 5]
R466	kaa26800acp_lib[8B 5]
R467	kaa26800acp_lib[8A 5]
R468	kaa26800acp_lib[8C 5]
R469	kaa26800acp_lib[26 C4]
R470	kaa26800acp_lib[26 C4]
R471	kaa26800acp_lib[8C 6]
R472	kaa26800acp_lib[26 D4]
R473	kaa26800acp_lib[7B 4]
R474	kaa26800acp_lib[7B 5]
R475	kaa26800acp_lib[5B 2]
R476	kaa26800acp_lib[5B 2]
R477	kaa26800acp_lib[6C 6]
R478	kaa26800acp_lib[6B 5]
R479	kaa26800acp_lib[6A 6]
R480	kaa26800acp_lib[15 C5]
R481	kaa26800acp_lib[7C 4]
R482	kaa26800acp_lib[7B 4]
R483	kaa26800acp_lib[7A 4]
R484	kaa26800acp_lib[6A 5]
R485	kaa26800acp_lib[6A 5]
R486	kaa26800acp_lib[6C 5]
R487	kaa26800acp_lib[6B 4]
R488	kaa26800acp_lib[7B 4]
R489	kaa26800acp_lib[7B 4]
R490	kaa26800acp_lib[7B 4]
R491	kaa26800acp_lib[6C 4]
R492	kaa26800acp_lib[6C 5]
R493	kaa26800acp_lib[6D 5]
R494	kaa26800acp_lib[34 B6]
R495	kaa26800acp_lib[31 C5]
R496	kaa26800acp_lib[34 C6]
R497	kaa26800acp_lib[31
	A5]
R498	kaa26800acp_lib[34 C5]
R499	kaa26800acp_lib[30 B5]
R500	kaa26800acp_lib[6B 3]
R501	kaa26800acp_lib[7C 4]
R502	kaa26800acp_lib[7C 4]
R503	kaa26800acp_lib[7C 4]
R504	kaa26800acp_lib[34 C6]
R505	kaa26800acp_lib[30 A5]
R506	kaa26800acp_lib[15 B5]
R507	kaa26800acp_lib[7D 4]
R508	kaa26800acp_lib[6C 3]
R509	kaa26800acp_lib[15 C2]
R510	kaa26800acp_lib[15 C2]
R511	kaa26800acp_lib[15 B2]
R512	kaa26800acp_lib[31 A2]
R513	kaa26800acp_lib[31 A2]
R514	kaa26800acp_lib[34 A1]
R515	kaa26800acp_lib[4B 5]
R516	kaa26800acp_lib[4B 4]
R517	kaa26800acp_lib[4B 4]
R518	kaa26800acp_lib[4A 5]
R519	kaa26800acp_lib[32 B5]
R520	kaa26800acp_lib[32 B5]
R521	kaa26800acp_lib[34 B1]
R522	kaa26800acp_lib[30 A2]
R523	kaa26800acp_lib[30 C5]
R524	kaa26800acp_lib[30 A2]
R525	kaa26800acp_lib[30 B2]
R526	kaa26800acp_lib[21 A3]
R527	kaa26800acp_lib[17 A2]
R528	kaa26800acp_lib[32 C5]
R529	kaa26800acp_lib[21 B3]
R530	kaa26800acp_lib[5B 5]
R531	kaa26800acp_lib[5B 6]
R532	kaa26800acp_lib[4B 4]
R533	kaa26800acp_lib[4C 4]
R534	kaa26800acp_lib[4A 4]
R535	kaa26800acp_lib[15 B3]
R536	kaa26800acp_lib[15 C3]
R537	kaa26800acp_lib[30 C2]
R538	kaa26800acp_lib[30 C2]
R539	kaa26800acp_lib[5C 5]
R540	kaa26800acp_lib[5C 6]
R541	kaa26800acp_lib[4D 2]
R542	kaa26800acp_lib[4D 2]
R543	kaa26800acp_lib[13 B3]
R544	kaa26800acp_lib[13 B1]
R545	kaa26800acp_lib[13 A3]
R546	kaa26800acp_lib[4D
	1]
R547	kaa26800acp_lib[4B 6]
R548	kaa26800acp_lib[4C 4]
R549	kaa26800acp_lib[4C 4]
R550	kaa26800acp_lib[4C 5]
R551	kaa26800acp_lib[13 C1]
R552	kaa26800acp_lib[13 A3]
R553	kaa26800acp_lib[13 D3]
R554	kaa26800acp_lib[13 A5]
R555	kaa26800acp_lib[13 B5]
R556	kaa26800acp_lib[13 C3]
R557	kaa26800acp_lib[13 C4]
R558	kaa26800acp_lib[13 B5]
R559	kaa26800acp_lib[13 C4]
R560	kaa26800acp_lib[21 C3]
R561	kaa26800acp_lib[21 C3]
R562	kaa26800acp_lib[21 C2]
R563	kaa26800acp_lib[20 B2]
R564	kaa26800acp_lib[20 A2]
R565	kaa26800acp_lib[21 C1]
R566	kaa26800acp_lib[20 B2]
R567	kaa26800acp_lib[20 B2]
R568	kaa26800acp_lib[20 B2]
R569	kaa26800acp_lib[20 A2]

WARNING

THIS WORK AND THE INFORMATION IT CONTAINS ARE THE PROPERTY OF OTIS ELEVATOR COMPANY (OTIS). **IT IS DELIVERED** TO OTHERS ON THE EXPRESS CONDITION THAT IT WILL BE USED ONLY FOR, OR ON BEHALF OF, OTIS; THAT NEITHER IT NOR THE INFORMATION IT CONTAINS WILL BE REPRODUCED OR DISCLOSED, IN WHOLE OR IN PART, WITHOUT THE PRIOR WRITTEN CONSENT OF OTIS; AND THAT ON DEMAND IT AND ANY COPIES WILL BE PROMPTLY RETURNED TO OTIS.

UNPUBLISHED WORK © OTIS ELEVATOR COMPANY
ALL RIGHTS RESERVED.

DWG KAA26800ACP

OTIS ENGINEERING CENTER
CHANGWON, KOREA

CHANGES

2017-08-21 REVISED. SEE KAA26800ACP_CDOC.DOC FOR DETAILS (CN1037523) MILLETT S / MAGDA RF

OTIS
United Technologies

HVPB
(High Voltage Power Board)
OVFR03A-406

DRAWN	S. MILLETT	ORIGINAL DATE	2017-01-06
CHK	W. HUANG		
APPD	R. MAGDA	SHEETS	
AUTH	CN897873	SHEET	53

DRAFTED IN ACCORDANCE WITH OTIS DOCUMENT 52847

R570	kaa26800acp_lib[20 C2]
R571	kaa26800acp_lib[26 B2]
R572	kaa26800acp_lib[26 A2]
R573	kaa26800acp_lib[19 B3]
R574	kaa26800acp_lib[19 C4]
R575	kaa26800acp_lib[19 D4]
R576	kaa26800acp_lib[11 C3]
R577	kaa26800acp_lib[11 A3]
R578	kaa26800acp_lib[25 C1]
R579	kaa26800acp_lib[26 A2]
R580	kaa26800acp_lib[26 A4]
R581	kaa26800acp_lib[28 C6]
R582	kaa26800acp_lib[29 B6]
R583	kaa26800acp_lib[41 B2]
R584	kaa26800acp_lib[41 B2]
R585	kaa26800acp_lib[41 C2]
R586	kaa26800acp_lib[41 C2]
R587	kaa26800acp_lib[41 C3]
R588	kaa26800acp_lib[41 D3]
R589	kaa26800acp_lib[41 B3]
R590	kaa26800acp_lib[41 B3]
R591	kaa26800acp_lib[25 A3]
R592	kaa26800acp_lib[29 C6]
R593	kaa26800acp_lib[24 C6]
R594	kaa26800acp_lib[22 C1]
R595	kaa26800acp_lib[30 B6]
R596	kaa26800acp_lib[30 C6]
R597	kaa26800acp_lib[31 C6]
R598	kaa26800acp_lib[31 B6]
R599	kaa26800acp_lib[32 B6]
R600	kaa26800acp_lib[32 C6]
R601	kaa26800acp_lib[27 B6]
R602	kaa26800acp_lib[27 C6]
REL1	kaa26800acp_lib[20 B4]
REL2	kaa26800acp_lib[20 C4]
REL3	kaa26800acp_lib[14 C4]
REL4	kaa26800acp_lib[14 B5]
REL5	kaa26800acp_lib[14 B6]
RT1	kaa26800acp_lib[20 D2]
SPARK_GAP1	kaa26800acp_lib[25 C6]
SPARK_GAP_1500UM1	kaa26800acp_lib[24 C2]
TB2	kaa26800acp_lib[14 B1]
TB3	kaa26800acp_lib[14 C6]
TB4	kaa26800acp_lib[10 B2]
TB5	kaa26800acp_lib[7B 3]
TB5-1	kaa26800acp_lib[7B 3]
TB6	kaa26800acp_lib[7C 3]
TB6-1	kaa26800acp_lib[7C 3]
TB7	kaa26800acp_lib[11 B6]
TB8	kaa26800acp_lib[7C 2]
TB9	kaa26800acp_lib[24 B1]
TR1	kaa26800acp_lib[25 B6]
TR2	kaa26800acp_lib[35 B5]
TR3	kaa26800acp_lib[34 B5]
TR4	kaa26800acp_lib[8C 3]
TR5	kaa26800acp_lib[5C 3]
U1	kaa26800acp_lib[25 C3]
U2	kaa26800acp_lib[16 B5]
U3	kaa26800acp_lib[28 C3]
U4	kaa26800acp_lib[25 B3]
U5	kaa26800acp_lib[22 C2]
U6	kaa26800acp_lib[24 C4]
U7	kaa26800acp_lib[28 B3]
U8	kaa26800acp_lib[29 C3]
U9	kaa26800acp_lib[33 B1]
U10	kaa26800acp_lib[33 B3]
U11	kaa26800acp_lib[27 B3]
U12	kaa26800acp_lib[17 A4]
U13	kaa26800acp_lib[29 B3]
U14	kaa26800acp_lib[25 B4]
U15	kaa26800acp_lib[17 D3]
U16	kaa26800acp_lib[17 D3]
U17	kaa26800acp_lib[24 C5]
U18	kaa26800acp_lib[36 C4]
U19	kaa26800acp_lib[27 C3]
U20	kaa26800acp_lib[9D 2]
U21	kaa26800acp_lib[36 C2]
U22	kaa26800acp_lib[36 C6]
U23	kaa26800acp_lib[19 C3]
U24	kaa26800acp_lib[18 A2]
U25	kaa26800acp_lib[39 B4]
U26	kaa26800acp_lib[19 B3]
U27	kaa26800acp_lib[35 B2]
U28	kaa26800acp_lib[35 C1]
U29	kaa26800acp_lib[23 B5]
U30	kaa26800acp_lib[35 C4]
U31	kaa26800acp_lib[22 C3]
U32	kaa26800acp_lib[22 C5]
U33	kaa26800acp_lib[18 B6]
U34	kaa26800acp_lib[21 C5]
U35	kaa26800acp_lib[18 C4]
U36	kaa26800acp_lib[18 B4]
U37	kaa26800acp_lib[18 C6]
U38	kaa26800acp_lib[19 D3]
U39	kaa26800acp_lib[34 B2]
U40	kaa26800acp_lib[34 C2]
U41	kaa26800acp_lib[12 C3 12C6 12D3 12B3]
U43	kaa26800acp_lib[8C 2]
U44	kaa26800acp_lib[34 C4]
U45	kaa26800acp_lib[8B 5 8B6]
U45	kaa26800acp_lib[38 C6 38B6]
U46	kaa26800acp_lib[8B 3]
U47	kaa26800acp_lib[38 B4]
U48	kaa26800acp_lib[38 C4]
U49	kaa26800acp_lib[37 C4]
U50	kaa26800acp_lib[26 C2]
U51	kaa26800acp_lib[15 C2]
U52	kaa26800acp_lib[15 C4]
U53	kaa26800acp_lib[6B 6 6C6 6B4 6C4]
U54	kaa26800acp_lib[37 C2]
U55	kaa26800acp_lib[37 C6]
U56	kaa26800acp_lib[5C 2]
U57	kaa26800acp_lib[15 B6]
U58	kaa26800acp_lib[31 C3]
U59	kaa26800acp_lib[31 B3]
U60	kaa26800acp_lib[6C 2]
U61	kaa26800acp_lib[6B 2]
U62	kaa26800acp_lib[30 B3]
U63	kaa26800acp_lib[21 A5]
U64	kaa26800acp_lib[15 B3]
U65	kaa26800acp_lib[21 B4]
U66	kaa26800acp_lib[4D 5 4B6 4C5 4B5]
U67	kaa26800acp_lib[32 B3]

WARNING

THIS WORK AND THE INFORMATION IT CONTAINS ARE THE PROPERTY OF OTIS ELEVATOR COMPANY (OTIS). **IT IS DELIVERED** TO OTHERS ON THE EXPRESS CONDITION THAT IT WILL BE USED ONLY FOR, OR ON BEHALF OF, OTIS; THAT NEITHER IT NOR THE INFORMATION IT CONTAINS WILL BE REPRODUCED OR DISCLOSED, IN WHOLE OR IN PART, WITHOUT THE PRIOR WRITTEN CONSENT OF OTIS; AND THAT ON DEMAND IT AND ANY COPIES WILL BE PROMPTLY RETURNED TO OTIS.

UNPUBLISHED WORK © OTIS ELEVATOR COMPANY
ALL RIGHTS RESERVED.

DWG KAA26800ACP

OTIS ENGINEERING CENTER
CHANGWON, KOREA

CHANGES

2017-08-21 REVISED. SEE KAA26800ACP_CDOC.DOC FOR DETAILS (CN1037523) MILLETT S / MAGDA RF

HVPB
(High Voltage Power Board)
OVFR03A-406

DRAWN	S. MILLETT	ORIGINAL DATE	2017-01-06
CHK	W. HUANG		
APPD	R. MAGDA	SHEETS	
AUTH	CN897873	SHEET	54

DRAFTED IN ACCORDANCE WITH OTIS DOCUMENT 52847

A3

U68	kaa26800acp_lib[30 C3]
U69	kaa26800acp_lib[13 B3 13B2 13D3 13C6]
U71	kaa26800acp_lib[32 C3]
U72	kaa26800acp_lib[21 C4]
U73	kaa26800acp_lib[21 C4]
U74	kaa26800acp_lib[17 C5]
U77	kaa26800acp_lib[41 B4]
U78	kaa26800acp_lib[41 C4]
U79	kaa26800acp_lib[41 B6]
VR1	kaa26800acp_lib[17 C3]
VR2	kaa26800acp_lib[17 C2]
VR3	kaa26800acp_lib[26 B5]
VR4	kaa26800acp_lib[8C 5]
VR5	kaa26800acp_lib[5B 2]
VR6	kaa26800acp_lib[5B 5]
VR7	kaa26800acp_lib[5C 5]
VR8	kaa26800acp_lib[14 B2]
VR9	kaa26800acp_lib[14 C2]
VR10	kaa26800acp_lib[14 C3]
VR11	kaa26800acp_lib[24 D3]
Z1	kaa26800acp_lib[28 C4]
Z2	kaa26800acp_lib[28 D4]
Z3	kaa26800acp_lib[17 C1]
Z4	kaa26800acp_lib[28 B4]
Z5	kaa26800acp_lib[29 D4]
Z6	kaa26800acp_lib[29 C4]
Z7	kaa26800acp_lib[28 A4]
Z8	kaa26800acp_lib[27 B4]
Z9	kaa26800acp_lib[29 B4]
Z10	kaa26800acp_lib[29 A4]
Z11	kaa26800acp_lib[27 A4]
Z12	kaa26800acp_lib[28 C6]
Z13	kaa26800acp_lib[28 B6]
Z14	kaa26800acp_lib[27 C4]
Z15	kaa26800acp_lib[27 B6]
Z16	kaa26800acp_lib[27 C4]
Z17	kaa26800acp_lib[29 B6]
Z18	kaa26800acp_lib[29 C6]
Z19	kaa26800acp_lib[31 C6]
Z20	kaa26800acp_lib[31 B6]
Z21	kaa26800acp_lib[30 B6]
Z22	kaa26800acp_lib[32 C6]
Z23	kaa26800acp_lib[31 C4]
Z24	kaa26800acp_lib[32 B6]
Z25	kaa26800acp_lib[31 A4]
Z26	kaa26800acp_lib[31 D5]
Z27	kaa26800acp_lib[31 B4]
Z28	kaa26800acp_lib[30 C6]
Z29	kaa26800acp_lib[30 B4]
Z30	kaa26800acp_lib[32 C4]
Z31	kaa26800acp_lib[30 C4]
Z32	kaa26800acp_lib[30 D4]
Z33	kaa26800acp_lib[32 A4]
Z34	kaa26800acp_lib[32 D4]
Z35	kaa26800acp_lib[32 B4]
Z36	kaa26800acp_lib[21 C3]
Z37	kaa26800acp_lib[24 A2]
Z38	kaa26800acp_lib[24 B3]
Z39	kaa26800acp_lib[9D 2]
Z40	kaa26800acp_lib[27 C6]
Z41	kaa26800acp_lib[35 B3]
Z43	kaa26800acp_lib[34 B3]
Z45	kaa26800acp_lib[30 A4]
Z46	kaa26800acp_lib[21 C2]
Z47	kaa26800acp_lib[25 C2]
Z48	kaa26800acp_lib[3A 2]
Z49	kaa26800acp_lib[3A 2]
Z50	kaa26800acp_lib[3A 2]
Z51	kaa26800acp_lib[3A 5]
Z52	kaa26800acp_lib[3A 5]
Z53	kaa26800acp_lib[3A 5]
Z54	kaa26800acp_lib[3A 5]
Z55	kaa26800acp_lib[3A 5]

WARNING

THIS WORK AND THE INFORMATION IT CONTAINS ARE THE PROPERTY OF OTIS ELEVATOR COMPANY (OTIS). **IT IS DELIVERED** TO OTHERS ON THE EXPRESS CONDITION THAT IT WILL BE USED ONLY FOR, OR ON BEHALF OF, OTIS; THAT NEITHER IT NOR THE INFORMATION IT CONTAINS WILL BE REPRODUCED OR DISCLOSED, IN WHOLE OR IN PART, WITHOUT THE PRIOR WRITTEN CONSENT OF OTIS; AND THAT ON DEMAND IT AND ANY COPIES WILL BE PROMPTLY RETURNED TO OTIS.

UNPUBLISHED WORK © OTIS ELEVATOR COMPANY
ALL RIGHTS RESERVED.

DWG KAA26800ACP

OTIS ENGINEERING CENTER
CHANGWON, KOREA

CHANGES

2017-08-21 REVISED. SEE KAA26800ACP_CDOC.DOC FOR DETAILS (CN1037523) MILLETT S / MAGDA RF

OTIS
United Technologies

HVPB
(High Voltage Power Board)
OVFR03A-406

DRAWN	S. MILLETT	ORIGINAL DATE	2017-01-06
CHK	W. HUANG		
APPD	R. MAGDA	SHEETS	
AUTH	CN897873	SHEET	55

DRAFTED IN ACCORDANCE WITH OTIS DOCUMENT 52847