POWER BOARD EXTENDED: BIDIRECTIONAL

PAGE	CIRCUT
2	CONVERTER INTERFACE TO PDB_II AND GDCB CHG-RELAY & RELAY DRIVER E2PROM #4 GATE DRIVER ENABLE
3	INVERTER INTERFACE TO PDB_II ERROR MERGING: DRIVER OCT ERROR MERGING: GATE DRIVER POWER FAIL E2PROM #2 GATE DRIVER ENABLE PTC TEMPERATURE MEASUREMENT
4	IGBT MODULES CURRENT SENSING
5	IGBT R (U): SMPS AND DRIVER
6	IGBT S (V): SMPS AND DRIVER
7	IGBT T (W): SMPS AND DRIVER
8	POWER SUPPLY: SENSING
9	LINE VOLTAGE SENSING (CONV) FLASHING DC-LINK LED
10	POWER FAIL MONITORING CIRCUIT (CONV)
11	VRS PHASE TO PHASE INSULATION (CONV)
12	VST PHASE TO PHASE INSULATION (CONV)
13	DC LINK VOLTAGE MEASUREMENT (INV)
14	IGBT TEMPERATURE MEASUREMENT
15- 18	ADD-ON: NETS BY PAGE
19- 28	ADD-ON: CREF PART REPORT
29- 34	LAYOUT DRAWINGS

ALTERNATIVELY ASSEMBLED AS CONVERTER OR ASSEMBLED AS INVERTER

APPLICATION OVFR2A-412 120A REGENERATIVE DRIVE	FUNCTIONALITY	
	CONVERTER	INVERTER
G2A26800MX1 ASSIGNED WITH PROPERTY: ASSEMBLY_SEC1=NO		⊗
G2A26800MX2 ASSIGNED WITH PROPERTY: ASSEMBLY_SEC2=NO	⊗	

PART NUMBER: G2A26800MX
TEST REQUIREMENT: G2A26800MX_TR
BASIC DATA: G2A26800MX_BD
BARE BOARD: G2A610ADB
PCB_CODE: A2ADB1--

DRAWING
ABBREV=PBX_BIDI
TITLE=PBX_BIDI
LAST_MODIFIED=Fri Dec 11 11:09:01 2009

CR-1 : @PROJ_LIB.PBX_BIDI(SCH_1):PAGE1

Changes

WARNING
THIS WORK AND THE INFORMATION IT CONTAINS ARE THE PROPERTY OF OTIS ELEVATOR COMPANY (OTIS). IT IS DELIVERED TO OTHERS ON THE EXPRESS CONDITION THAT IT WILL BE USED ONLY FOR OR ON BEHALF OF OTIS ; THAT NEITHER IT OR NOR THE INFORMATION IT CONTAINS WILL BE REPRODUCED OR DISCLOSED, IN WHOLE OR IN PART, WITHOUT THE PRIOR WRITTEN CONSENT OF OTIS ; AND THAT ON DEMAND IT AND ANY COPIES WILL BE PROMPTLY RETURNED TO OTIS.

UNPUBLISHED WORK (C) OTIS ELEVATOR COMPANY
ALL RIGHTS RESERVED.

Otis
A United Technologies Company

CIRCUIT DIAGRAM FOR

PBX_BIDI

CAD GENERATED
CADENCE-CONCEPT

DWG G2A26800MX

OTIS ENGINEERING CENTER
BERLIN, GERMANY

		ORIGINAL DATE
DRAWN	A. Tutat	
CHK	M. Dehmlow	2009-12-08
APPD	M. Dehmlow	35 SHEETS
AUTH	CA47A-000528	SHEET 1

OECB_A3
REV 2004-09-06

CONVERTER INTERFACE TO PDB_II AND GDCB

ROOM=LOGIC_CONVERTER

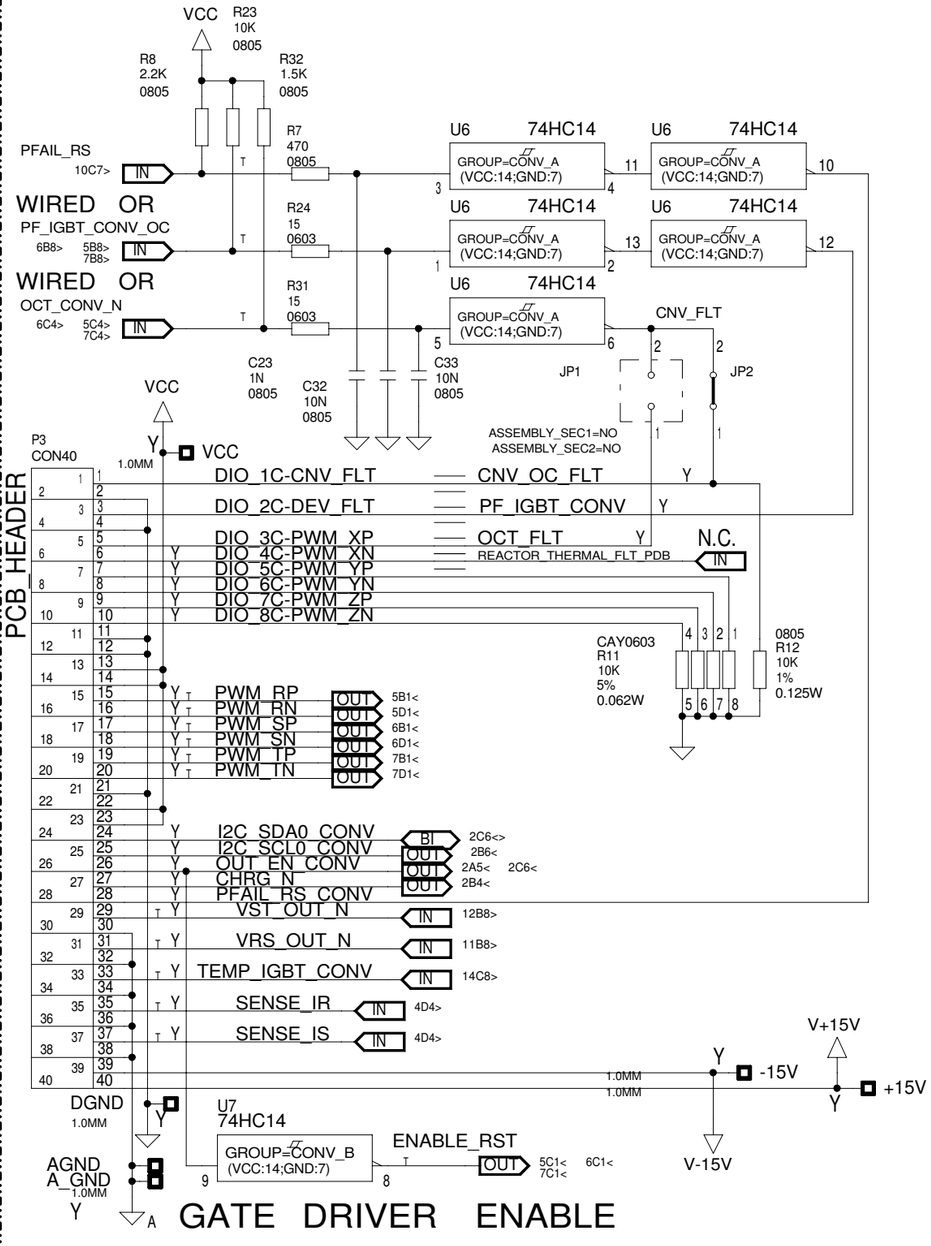

GATE DRIVER ENABLE

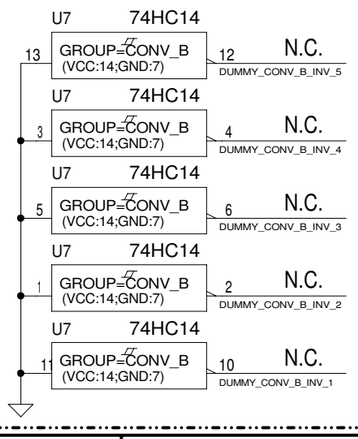

ASSEMBLY_SEC1=NO

CHG-RELAY & RELAY DRIVER

ROOM=LOGIC_CONVERTER

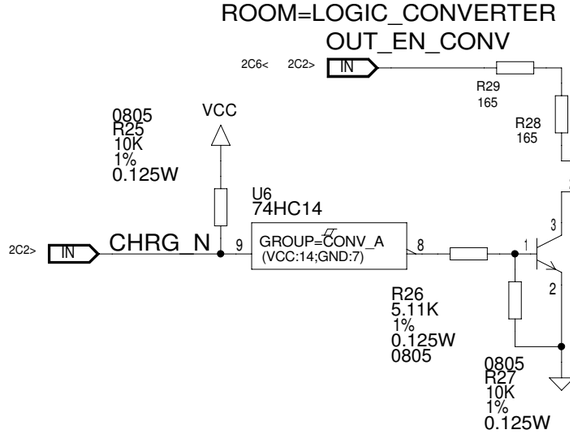

ROOM=CHRG_RELAIS

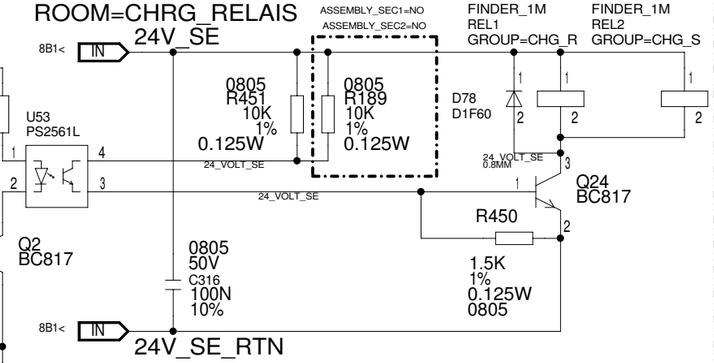

E2PROM

ROOM=LOGIC_CONVERTER

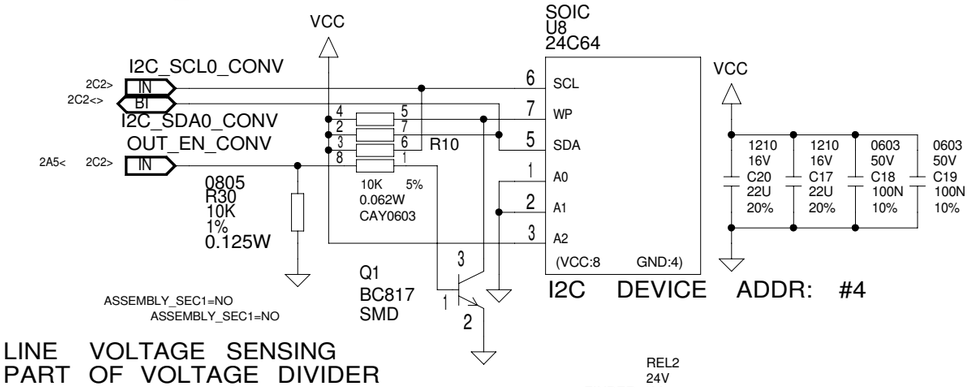

LINE VOLTAGE SENSING
PART OF VOLTAGE DIVIDER

ROOM=LINE_VOLTAGE_SENSING

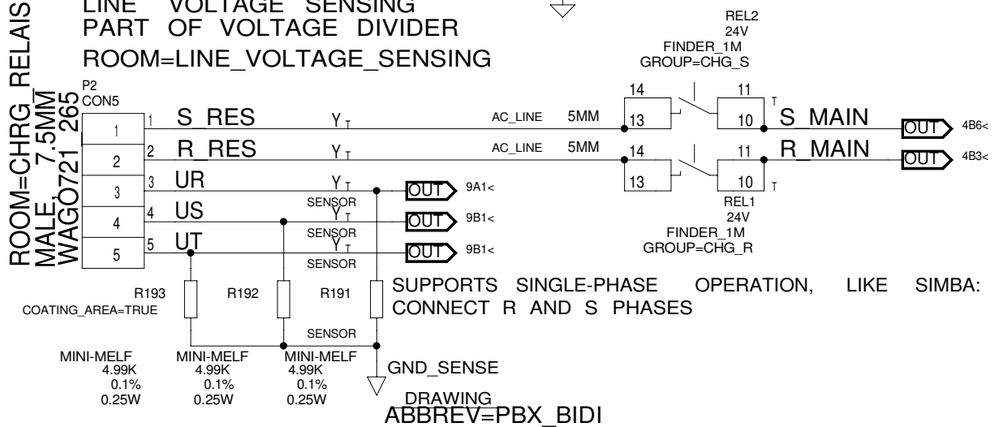

DRAWING
ABBREV=PBX_BIDI
TITLE=PBX_BIDI
LAST_MODIFIED=Fri

CR-2 : @PROJ_LIB.PBX_BIDI(SCH_1):PAGE2
Dec 11 11:13:42 2009

Changes

WARNING
THIS WORK AND THE INFORMATION IT CONTAINS ARE THE PROPERTY OF OTIS ELEVATOR COMPANY (OTIS). IT IS DELIVERED TO OTHERS ON THE EXPRESS CONDITION THAT IT WILL BE USED ONLY FOR OR ON BEHALF OF OTIS ; THAT NEITHER IT OR NOR THE INFORMATION IT CONTAINS WILL BE REPRODUCED OR DISCLOSED, IN WHOLE OR IN PART, WITHOUT THE PRIOR WRITTEN CONSENT OF OTIS ; AND THAT ON DEMAND IT AND ANY COPIES WILL BE PROMPTLY RETURNED TO OTIS.

UNPUBLISHED WORK (C) OTIS ELEVATOR COMPANY
ALL RIGHTS RESERVED.

Otis
A United Technologies Company

CIRCUIT DIAGRAM FOR

PBX_BIDI

CAD GENERATED
CADENCE-CONCEPT

DWG **G2A26800MX**

OTIS ENGINEERING CENTER
BERLIN, GERMANY

DRAWN	A. Tutat	ORIGINAL DATE
CHK	M. Dehmlow	2009-12-08
APPD	M. Dehmlow	35 SHEETS
AUTH	CA47A-000528	SHEET 2

OECB_A3
REV 2004-09-06

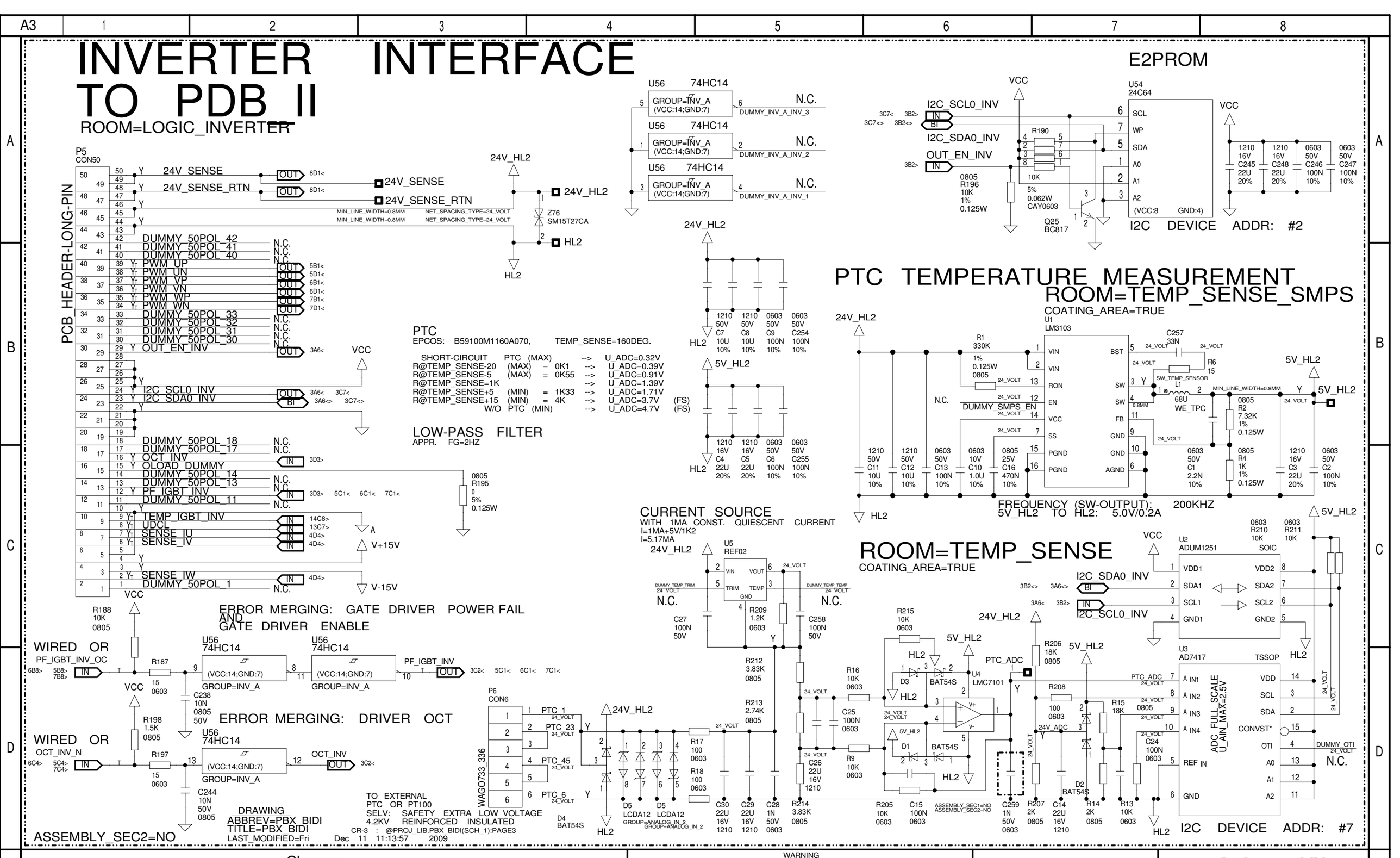

Changes

WARNING

THIS WORK AND THE INFORMATION IT CONTAINS ARE THE PROPERTY OF OTIS ELEVATOR COMPANY (OTIS). IT IS DELIVERED TO OTHERS ON THE EXPRESS CONDITION THAT IT WILL BE USED ONLY FOR OR ON BEHALF OF OTIS ; THAT NEITHER IT OR NOR THE INFORMATION IT CONTAINS WILL BE REPRODUCED OR DISCLOSED, IN WHOLE OR IN PART, WITHOUT THE PRIOR WRITTEN CONSENT OF OTIS ; AND THAT ON DEMAND IT AND ANY COPIES WILL BE PROMPTLY RETURNED TO OTIS.

UNPUBLISHED WORK (C) OTIS ELEVATOR COMPANY
ALL RIGHTS RESERVED.

Otis
A United Technologies Company

CIRCUIT DIAGRAM FOR

PBX_BIDI

CAD GENERATED
CADENCE-CONCEPT

DWG	G2A26800MX	
OTIS ENGINEERING CENTER BERLIN, GERMANY		
DRAWN	A. Tutat	ORIGINAL DATE
CHK	M. Dehmlow	2009-12-08
APPD	M. Dehmlow	35 SHEETS
AUTH	CA47A-000528	SHEET 3

OECB_A3
REV 2004-09-06

IGBT MODULES

47NF AND 68NF ASSEMBLED ALTERNATIVELY ON THE SAME POSITION

PE_RU, PE_SV, PE_TW ASSIGNED AS SHIELDING

ROOM=IGBT_MODULES

DISCHARGE RESISTOR

4A2> IN DCP_DIS — R19 180K 5% 2W THT — R5 180K 5% 2W THT — R3 180K 5% 2W THT — HI_DC_MID — HI_DC_MID

4C2> IN DCN_DIS

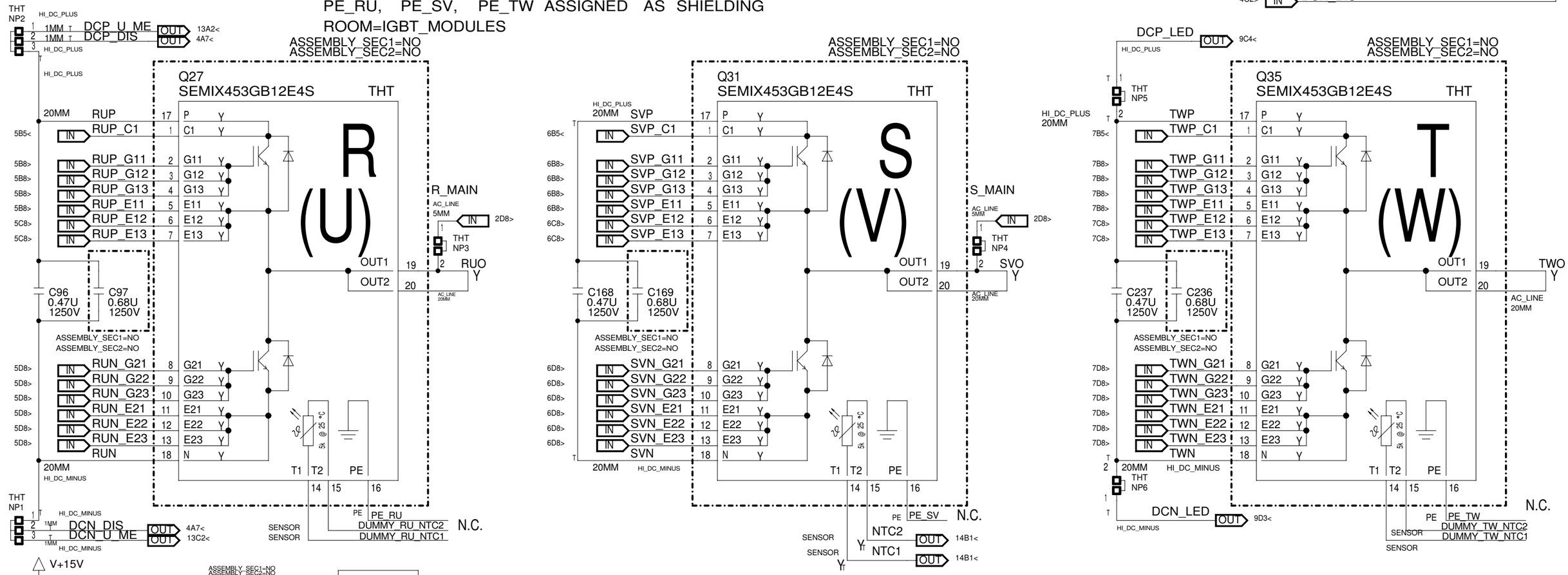

ROOM=CURRENT_SENSING

CURRENT SENSING

200A CURRENT SENSORS: GAA622S3

S26P200D15Y TAMURA
T60404-N4646-X201 VAC
LA200-P LEM

ASSEMBLED ALTERNATIVELY ON THE SAME POSITION

DRAWING
ABBREV=PBX_BIDI
TITLE=PBX_BIDI
LAST_MODIFIED=Fri Dec 11 11:14:13 2009

CR-4 : @PROJ_LIB.PBX_BIDI(SCH_1):PAGE4

Changes

WARNING

THIS WORK AND THE INFORMATION IT CONTAINS ARE THE PROPERTY OF OTIS ELEVATOR COMPANY (OTIS). IT IS DELIVERED TO OTHERS ON THE EXPRESS CONDITION THAT IT WILL BE USED ONLY FOR OR ON BEHALF OF OTIS ; THAT NEITHER IT OR NOR THE INFORMATION IT CONTAINS WILL BE REPRODUCED OR DISCLOSED, IN WHOLE OR IN PART, WITHOUT THE PRIOR WRITTEN CONSENT OF OTIS ; AND THAT ON DEMAND IT AND ANY COPIES WILL BE PROMPTLY RETURNED TO OTIS.

UNPUBLISHED WORK (C) OTIS ELEVATOR COMPANY
ALL RIGHTS RESERVED.

Otis
A United Technologies Company

CIRCUIT DIAGRAM FOR

PBX_BIDI

CAD GENERATED
CADENCE-CONCEPT

DWG **G2A26800MX**

OTIS ENGINEERING CENTER
BERLIN, GERMANY

DRAWN	A. Tutat	ORIGINAL DATE
CHK	M. Dehmlow	2009-12-08
APPD	M. Dehmlow	35 SHEETS
AUTH	CA47A-000528	SHEET 4

OECB_A3
REV 2004-09-06

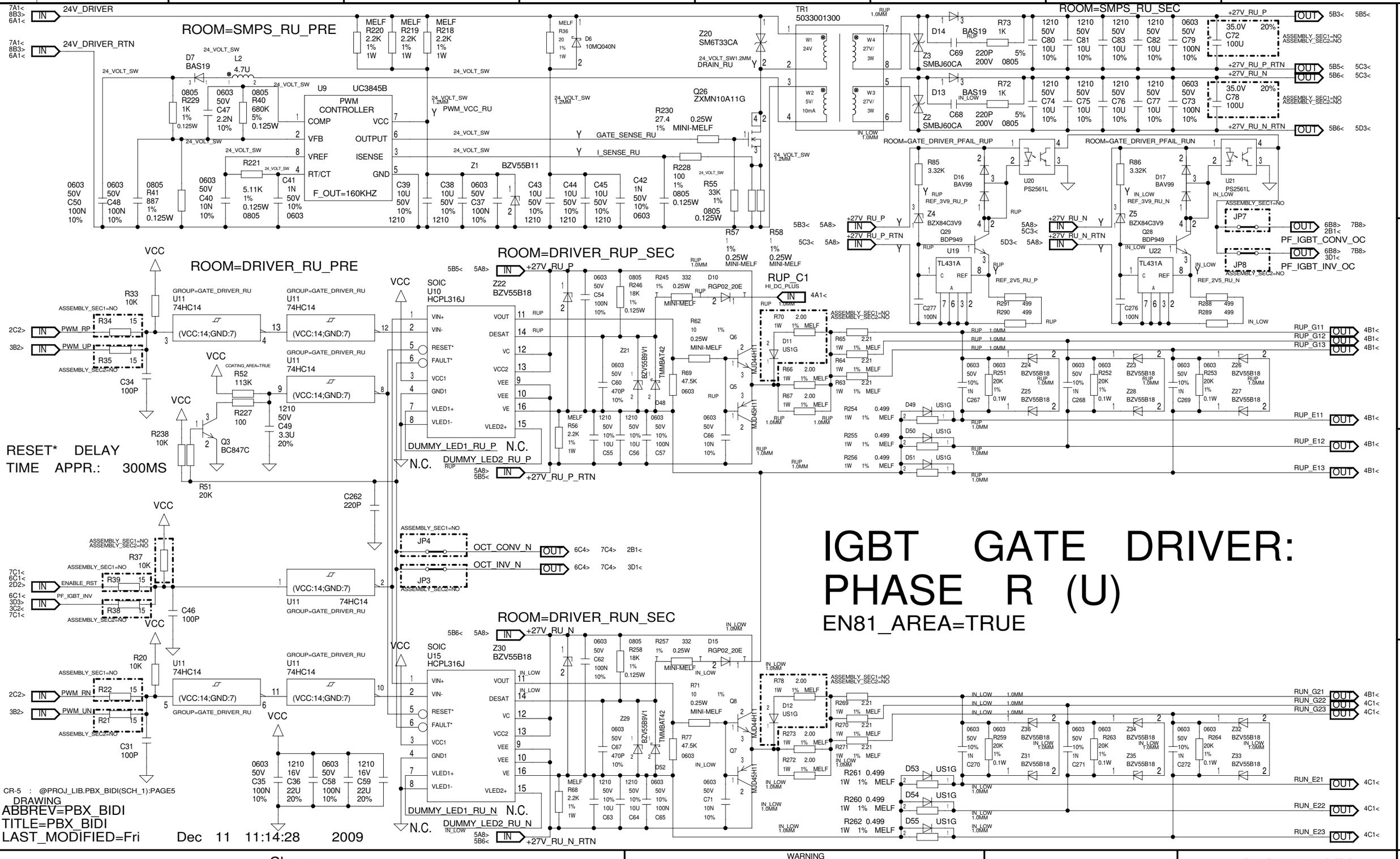

IGBT GATE DRIVER: PHASE R (U)

EN81_AREA=TRUE

Changes

WARNING

THIS WORK AND THE INFORMATION IT CONTAINS ARE THE PROPERTY OF OTIS ELEVATOR COMPANY (OTIS). IT IS DELIVERED TO OTHERS ON THE EXPRESS CONDITION THAT IT WILL BE USED ONLY FOR OR ON BEHALF OF OTIS ; THAT NEITHER IT OR NOR THE INFORMATION IT CONTAINS WILL BE REPRODUCED OR DISCLOSED, IN WHOLE OR IN PART, WITHOUT THE PRIOR WRITTEN CONSENT OF OTIS ; AND THAT ON DEMAND IT AND ANY COPIES WILL BE PROMPTLY RETURNED TO OTIS.

UNPUBLISHED WORK (C) OTIS ELEVATOR COMPANY
ALL RIGHTS RESERVED.

Otis
A United Technologies Company

CIRCUIT DIAGRAM FOR

PBX_BIDI

CAD GENERATED
CADENCE-CONCEPT

DWG	G2A26800MX
OTIS ENGINEERING CENTER BERLIN, GERMANY	
DRAWN A. Tutat	ORIGINAL DATE
CHK M. Dehmlow	2009-12-08
APPD M. Dehmlow	35 SHEETS
AUTH CA47A-000528	SHEET 5

OECB_A3
REV 2004-09-06

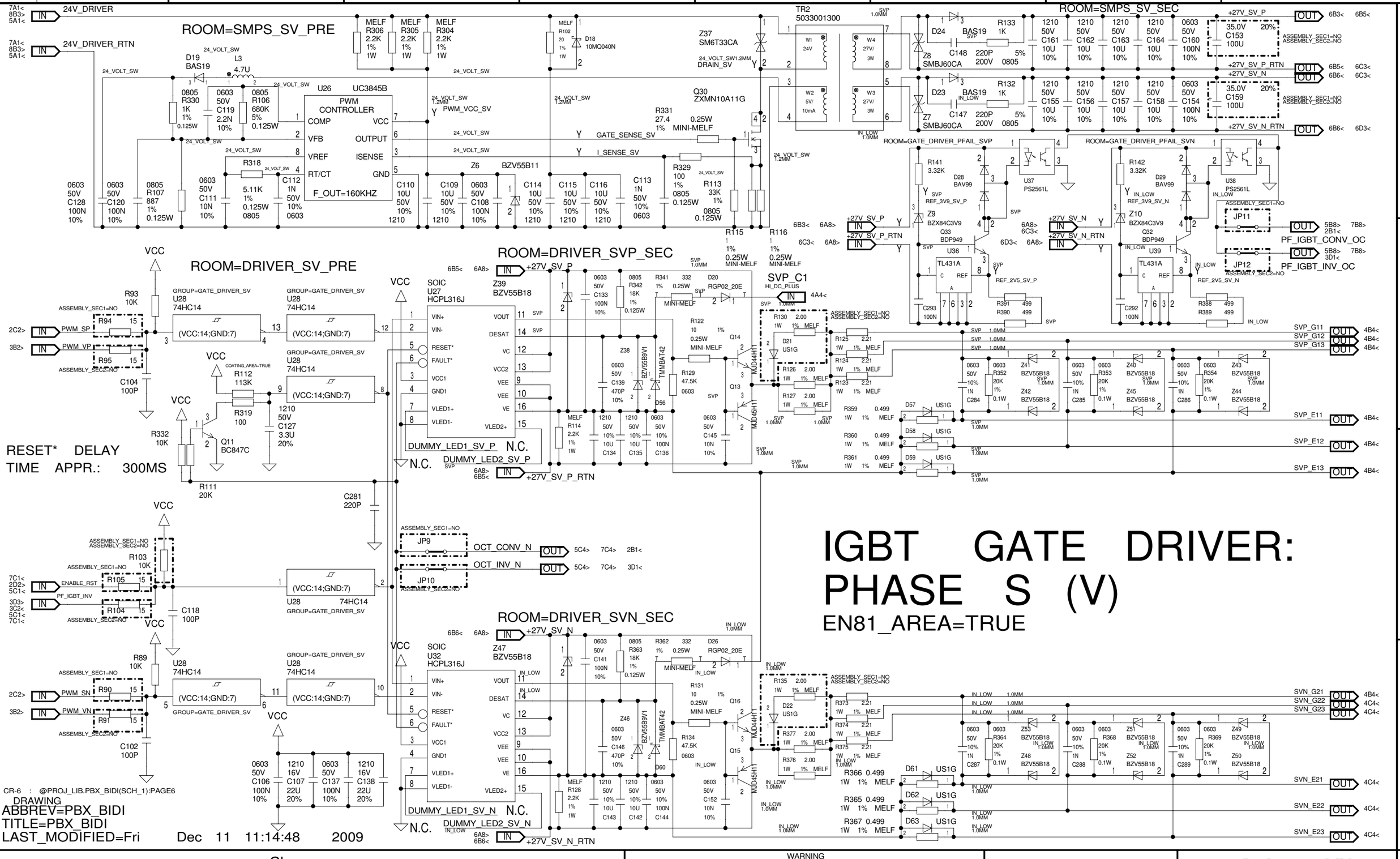

IGBT GATE DRIVER: PHASE S (V)

EN81_AREA=TRUE

CR-6 : @PROJ_LIB.PBX_BIDI(SCH_1):PAGE6

DRAWING
ABBREV=PBX_BIDI
TITLE=PBX_BIDI
LAST_MODIFIED=Fri Dec 11 11:14:48 2009

Changes

WARNING

THIS WORK AND THE INFORMATION IT CONTAINS ARE THE PROPERTY OF OTIS ELEVATOR COMPANY (OTIS). IT IS DELIVERED TO OTHERS ON THE EXPRESS CONDITION THAT IT WILL BE USED ONLY FOR OR ON BEHALF OF OTIS ; THAT NEITHER IT OR NOR THE INFORMATION IT CONTAINS WILL BE REPRODUCED OR DISCLOSED, IN WHOLE OR IN PART, WITHOUT THE PRIOR WRITTEN CONSENT OF OTIS ; AND THAT ON DEMAND IT AND ANY COPIES WILL BE PROMPTLY RETURNED TO OTIS.

UNPUBLISHED WORK (C) OTIS ELEVATOR COMPANY
ALL RIGHTS RESERVED.

Otis
A United Technologies Company

CIRCUIT DIAGRAM FOR

PBX_BIDI

CAD GENERATED
CADENCE-CONCEPT

DWG	G2A26800MX
OTIS ENGINEERING CENTER BERLIN, GERMANY	
DRAWN A. Tutat	ORIGINAL DATE
CHK M. Dehmlow	2009-12-08
APPD M. Dehmlow	35 SHEETS
AUTH CA47A-000528	SHEET 6

OECB_A3
REV 2004-09-06

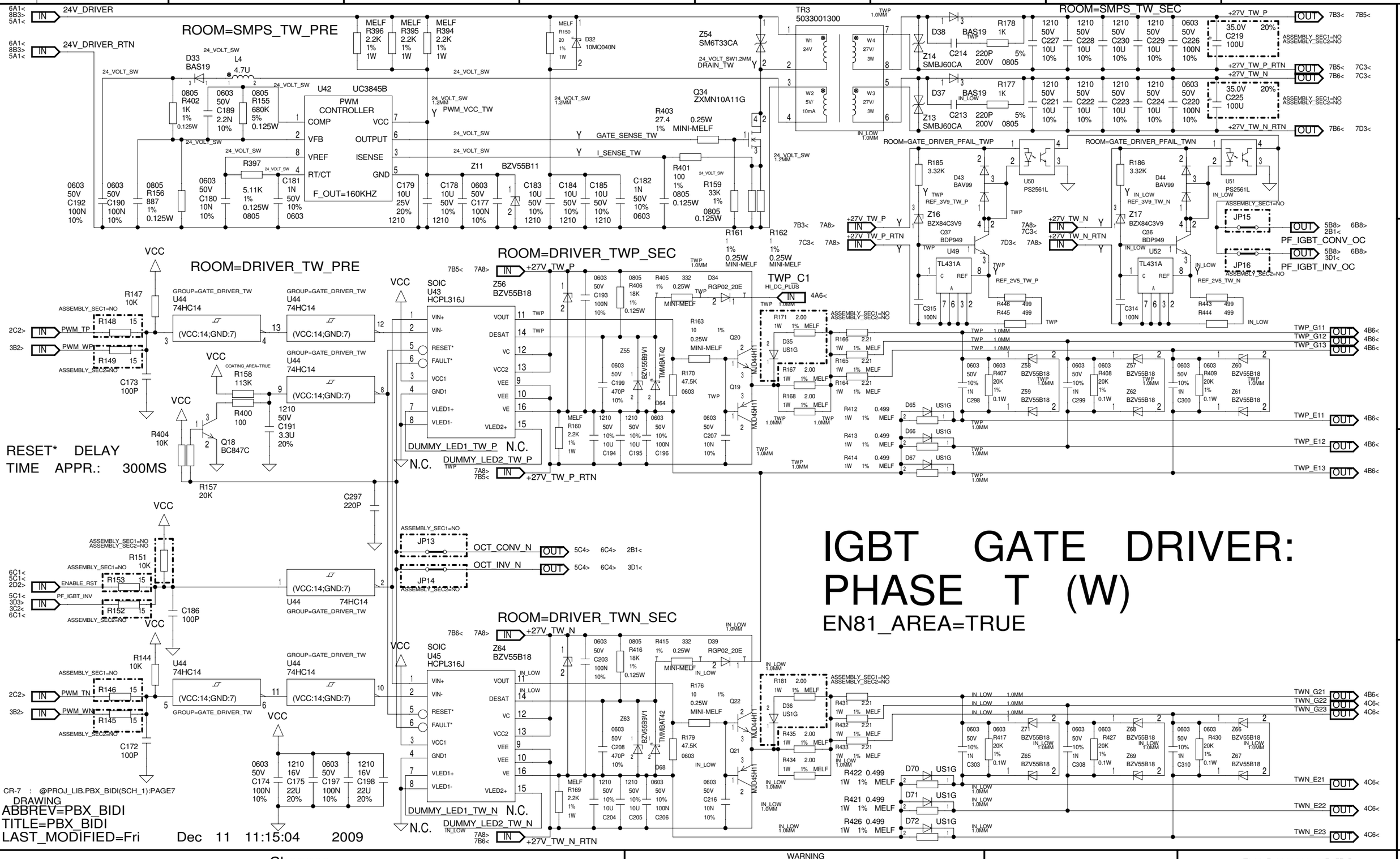

IGBT GATE DRIVER: PHASE T (W)

EN81_AREA=TRUE

Changes

WARNING

THIS WORK AND THE INFORMATION IT CONTAINS ARE THE PROPERTY OF OTIS ELEVATOR COMPANY (OTIS). IT IS DELIVERED TO OTHERS ON THE EXPRESS CONDITION THAT IT WILL BE USED ONLY FOR OR ON BEHALF OF OTIS ; THAT NEITHER IT OR NOR THE INFORMATION IT CONTAINS WILL BE REPRODUCED OR DISCLOSED, IN WHOLE OR IN PART, WITHOUT THE PRIOR WRITTEN CONSENT OF OTIS ; AND THAT ON DEMAND IT AND ANY COPIES WILL BE PROMPTLY RETURNED TO OTIS.

UNPUBLISHED WORK (C) OTIS ELEVATOR COMPANY
ALL RIGHTS RESERVED.

Otis
A United Technologies Company

CIRCUIT DIAGRAM FOR

PBX_BIDI

CAD GENERATED
CADENCE-CONCEPT

DWG	G2A26800MX
OTIS ENGINEERING CENTER BERLIN, GERMANY	
DRAWN A. Tutat	ORIGINAL DATE
CHK M. Dehmlow	2009-12-08
APPD M. Dehmlow	35 SHEETS
AUTH CA47A-000528	SHEET 7

OECB_A3
REV 2004-09-06

A3 | 1 | 2 | 3 | 4 | 5 | 6 | 7 | 8

ROOM=INV_IGBT_SUPPLY_IN
EN81_AREA=TRUE

ASSEMBLY_SEC2=NO

INV-INTERFACE TO PDB_II
POWER SUPPLY: IGBT GATE DRIVER

P4 CON2 — WAGO721_262

24V_SW — 24_VOLT_SW 1.2MM — ROOM=SMPS_TW_PRE

R454 MELF 20 1% 1W — R455 MELF 20 1% 1W — R441 0 MELF

R448 MELF 20 1% 1W — R449 MELF 20 1% 1W — D76 10MQ040N

24V_SW_RTN

Z18 SMBJ36CA

C249 470U 50V THT 20% — C242 10U 50V 1210 10% — C241 10U 50V 1210 10% — C243 100N 50V 0805 10%

R442 0 MELF — ROOM=SMPS_TW_PRE

ROOM=SMPS_RU_PRE

EN81_AREA=TRUE

2A6< 8B1< 2A6< IN 24V_SE T — R217 0 MELF — 24V_DRIVER 24_VOLT_SW 1.2MM OUT 5A1< 6A1< 7A1<

2B6< 8B1< 2B6< IN 24V_SE_RTN T — R216 0 MELF — 24V_DRIVER_RTN 24_VOLT_SW 1.2MM OUT 5A1< 6A1< 7A1<

ASSEMBLY_SEC1=NO

24V_SMPS_SENSE — 24_VOLT 1.2MM

SENSE_PWM_CONTROLLER_SUPPLY — 24_VOLT

Z73 BZG05C4V7

VCC_PWM_CONTROLLER — 24_VOLT

D73 BYG22D — Z70 SMBJ30CA — 24_VOLT 1.2MM — 24_VOLT

D75 BYG22D — D74 BYG22D — 24_VOLT

W1 24V/ 5,6W — W2 16V/ 80mA

SMPS_SENSE_DRAIN

U48 UC3845B — PWM CONTROLLER — COMP VCC VFB OUTPUT VREF ISENSE RT/CT GND

F OUTPUT=160KHZ (R>5K) F=1.72/(R*C)

D42 10MQ040N — R183 22.1 1% 0.25W MINI-MELF — R184 249 1% 0.25W MINI-MELF — Q23 IRFS23N15D D2PAK — SMPS_SENSE_GATE

R429 10K 1% 0.125W 0805 — R428 27K 1% 0805

ASSEMBLY_SEC1=NO ASSEMBLY_SEC2=NO

I_SENSE_PWM_CONTROLLER — ISENSE — R436 1.33K 0.125W 0805 1%

Z15 BZX84C18 — Z74 BZV55C3V3

C309 10N 50V 10% — C306 220P 200V 5% — C307 220P 200V 5% — 24V_SMPS_SENSE_RTN

C232 10U 1210 50V 10% — C231 10U 1210 50V 10% — C312 100P 50V 10% 0603

MELF R437 1.21 1% 1W — MELF R440 1.21 1% 1W — MELF R438 1.21 1% 1W — MELF R439 1.21 1% 1W

0.82A 1.65A 2.48A 3.3A

TR4 SL02060312

W3 13,5V/ 160mA — W4 13,5V/ 160mA — GND_SENSE

Z72 SMBJ90CA — D40 BYG22D — R180 1K — C215 220P 200V

Z75 SMBJ90CA — D41 BYG22D — R182 1K — C235 220P 200V

+15V_SENSE — S+15V — SGND — S_GND — GND_SENSE — S-15V — -15V_SENSE

1210 50V C217 10U 10% — THT 25V C218 470U 20% — 0805 50V C311 100N 10%

1210 50V C233 10U 10% — THT 25V C234 470U 20% — 0805 50V C313 100N 10%

C210 100N — R175 10

R174 374 — R425 374

U46 PS2561L

0805 R424 10K 1% 0.125W

C304 100N 10% 50V 0805 — R419 10K 1% 0.125W 0805

ASSEMBLY_SEC1=NO ASSEMBLY_SEC2=NO

0805 R420 10K 1% 0.125W

C209 50V 0805 10N 10%

D69 BYG22D

U47 TL431A

0805 R418 1K 1% 0.125W

1210 50V C211 10U 10% — 0805 50V C212 330N 10%

0805 R423 1K 1% 0.125W

ASSEMBLY_SEC1=NO ASSEMBLY_SEC2=NO

CONV-INTERFACE TO PDB_II
POWER SUPPLY: IGBT GATE DRIVER AND SENSING

ROOM=CONV_IGBT_SENSE_SUPPLY_IN
ASSEMBLY_SEC1=NO

P1 CON2 — WAGO_VP5MM

24V_SE — 24_VOLT_SE 1.2MM — R456 0 MELF — R447 0 MELF

C256 100N 50V 0805 — C21 470U 50V — C22 10U 50V 1210

Z19 SMBJ36CA

24V_SE_RTN — 24_VOLT_SE 1.2MM

R410 442 1% 0.25W MINI-MELF — R411 442 1% 0.25W MINI-MELF

ROOM=SMPS_SENSE_LOW_SIDE

24V_SENSE 3A2> IN — ASSEMBLY_SEC2=NO — R458 0 MELF

24V_SENSE_RTN 3A2> IN — R453 0 MELF

Z12 SM6T22CA

ASSEMBLY_SEC2=NO — R173 6.81K — C305 56P 5% 50V

R172 10K

C200 10U 50V 1210 10% — C302 100N 50V 10% 0805 — C201 100U 35.0V 20% — C202 10U 10% 1210 50V — C301 100N 10% 50V

24_VOLT

POWER SUPPLY: LOW VOLTAGE

ROOM=SMPS_SENSE_LOW_SIDE
COATING_AREA=FALSE

SENSING HIGH VOLTAGE

ROOM=SMPS_SENSE_HIGH_SIDE
COATING_AREA=FALSE

CR-8 : @PROJ_LIB.PBX_BIDI(SCH_1):PAGE8

DRAWING
ABBREV=PBX_BIDI
TITLE=PBX_BIDI

LAST_MODIFIED=Fri Dec 11 11:15:19 2009

Changes

WARNING

THIS WORK AND THE INFORMATION IT CONTAINS ARE THE PROPERTY OF OTIS ELEVATOR COMPANY (OTIS). IT IS DELIVERED TO OTHERS ON THE EXPRESS CONDITION THAT IT WILL BE USED ONLY FOR OR ON BEHALF OF OTIS ; THAT NEITHER IT OR NOR THE INFORMATION IT CONTAINS WILL BE REPRODUCED OR DISCLOSED, IN WHOLE OR IN PART, WITHOUT THE PRIOR WRITTEN CONSENT OF OTIS ; AND THAT ON DEMAND IT AND ANY COPIES WILL BE PROMPTLY RETURNED TO OTIS.

UNPUBLISHED WORK (C) OTIS ELEVATOR COMPANY
ALL RIGHTS RESERVED.

Otis
A United Technologies Company

CIRCUIT DIAGRAM FOR

PBX_BIDI

CAD GENERATED
CADENCE-CONCEPT

DWG **G2A26800MX**

OTIS ENGINEERING CENTER
BERLIN, GERMANY

		ORIGINAL DATE
DRAWN	A. Tutat	
CHK	M. Dehmlow	2009-12-08
APPD	M. Dehmlow	35 SHEETS
AUTH	CA47A-000528	SHEET 8

OECB_A3
REV 2004-09-06

LINE VOLTAGE SENSING (CONV)

STAR- TO DELTA-CONNECTION

COATING_AREA=TRUE

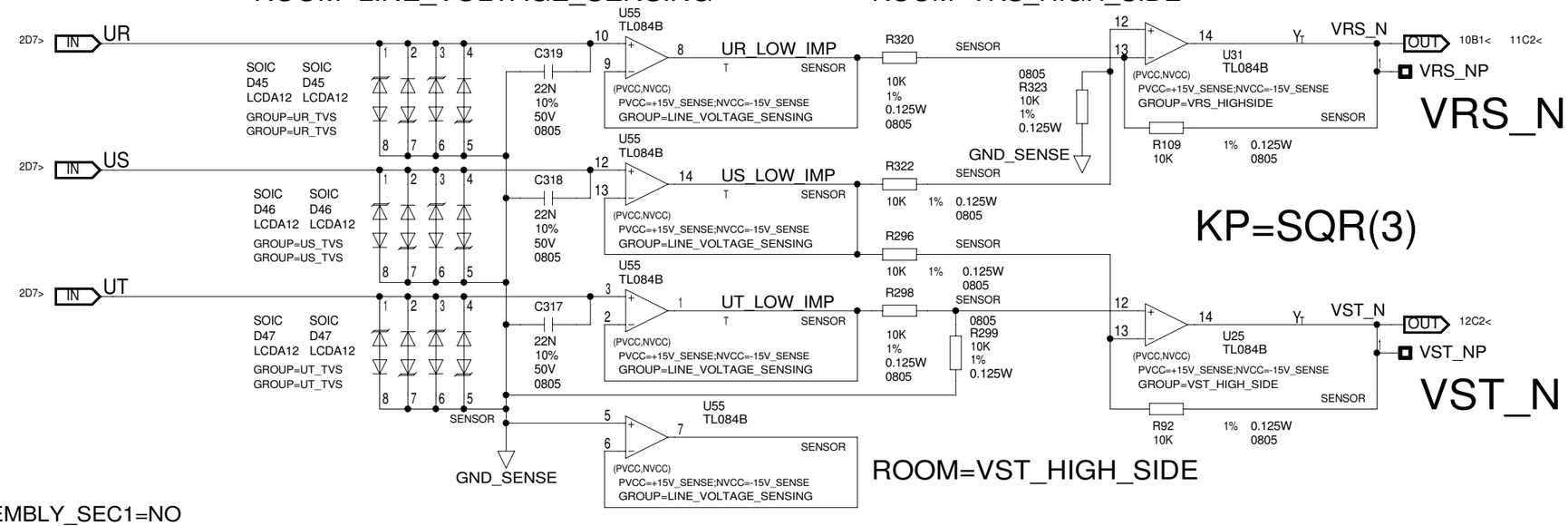

ASSEMBLY_SEC1=NO

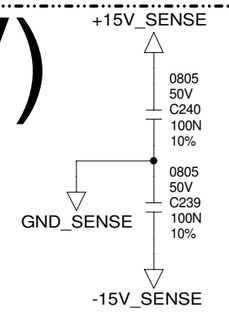

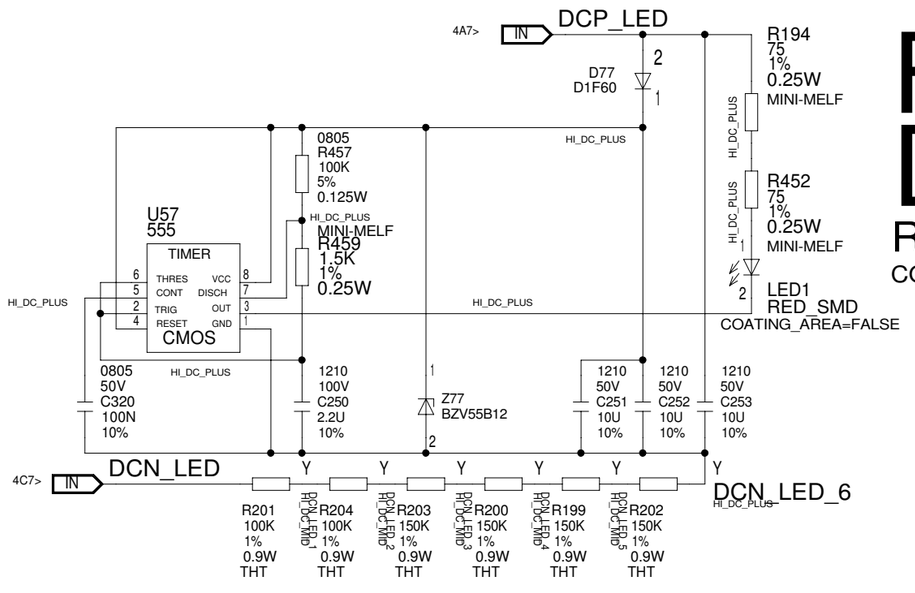

FLASHING DC-LINK LED

ROOM=DC_LINK_LED

COATING_AREA=TRUE

DRAWING

ABBREV=PBX_BIDI

TITLE=PBX_BIDI

LAST_MODIFIED=Fri Dec 11 11:15:36 2009

CR-9 : @PROJ_LIB.PBX_BIDI(SCH_1):PAGE9

Changes

WARNING

THIS WORK AND THE INFORMATION IT CONTAINS ARE THE PROPERTY OF OTIS ELEVATOR COMPANY (OTIS). IT IS DELIVERED TO OTHERS ON THE EXPRESS CONDITION THAT IT WILL BE USED ONLY FOR OR ON BEHALF OF OTIS ; THAT NEITHER IT OR NOR THE INFORMATION IT CONTAINS WILL BE REPRODUCED OR DISCLOSED, IN WHOLE OR IN PART, WITHOUT THE PRIOR WRITTEN CONSENT OF OTIS ; AND THAT ON DEMAND IT AND ANY COPIES WILL BE PROMPTLY RETURNED TO OTIS.

UNPUBLISHED WORK (C) OTIS ELEVATOR COMPANY
ALL RIGHTS RESERVED.

Otis
A United Technologies Company

CIRCUIT DIAGRAM FOR

PBX_BIDI

CAD GENERATED
CADENCE-CONCEPT

DWG	G2A26800MX	
OTIS ENGINEERING CENTER BERLIN, GERMANY		
DRAWN	A. Tutat	ORIGINAL DATE
CHK	M. Dehmlow	2009-12-08
APPD	M. Dehmlow	35 SHEETS
AUTH	CA47A-000528	SHEET 9

OEGB_A3
REV 2004-09-06

POWER FAIL MONITORING CIRCUIT (CONV)

ROOM=POWER_FAIL_MONITORING
COATING_AREA=TRUE

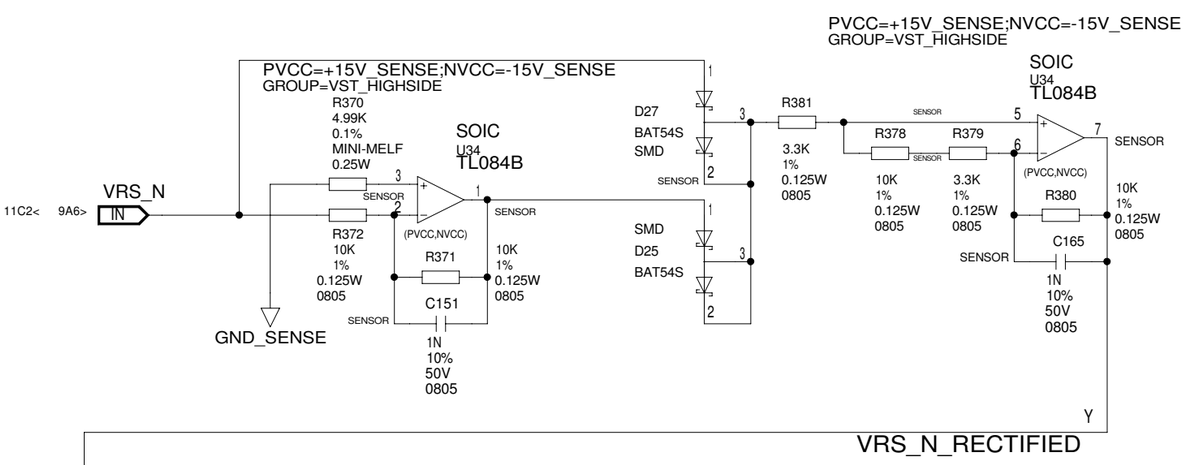

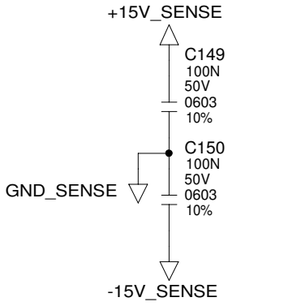

CAPS FOR OPAMP'S

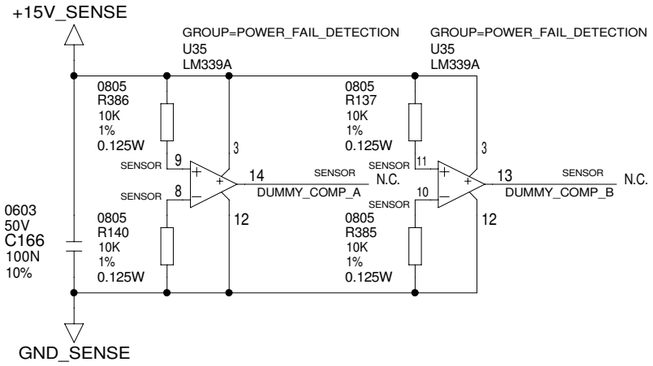

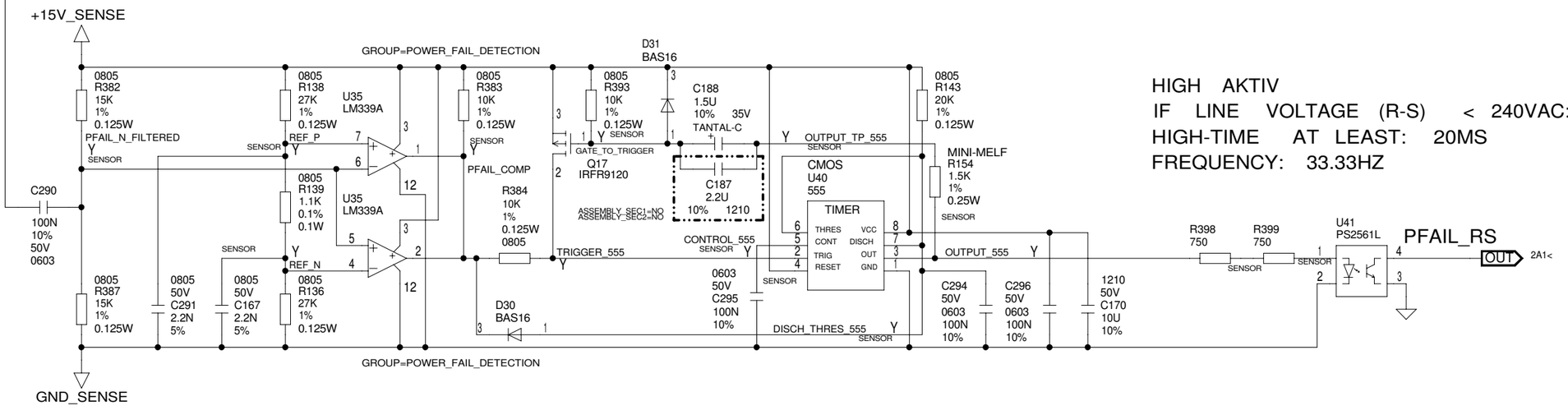

HIGH AKTIV
IF LINE VOLTAGE (R-S) < 240VAC:
HIGH-TIME AT LEAST: 20MS
FREQUENCY: 33.33HZ

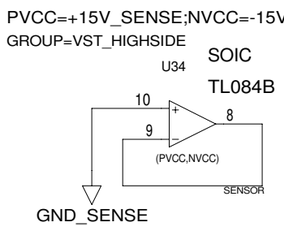

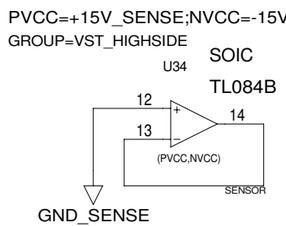

ASSEMBLY_SEC1=NO

DRAWING
ABBREV=PBX_BIDI
TITLE=PBX_BIDI
LAST_MODIFIED=Fri Dec 11 11:15:50 2009

CR-10 : @PROJ_LIB.PBX_BIDI(SCH_1):PAGE10

Changes

WARNING
THIS WORK AND THE INFORMATION IT CONTAINS ARE THE PROPERTY OF OTIS ELEVATOR COMPANY (OTIS). IT IS DELIVERED TO OTHERS ON THE EXPRESS CONDITION THAT IT WILL BE USED ONLY FOR OR ON BEHALF OF OTIS ; THAT NEITHER IT OR NOR THE INFORMATION IT CONTAINS WILL BE REPRODUCED OR DISCLOSED, IN WHOLE OR IN PART, WITHOUT THE PRIOR WRITTEN CONSENT OF OTIS ; AND THAT ON DEMAND IT AND ANY COPIES WILL BE PROMPTLY RETURNED TO OTIS.

UNPUBLISHED WORK (C) OTIS ELEVATOR COMPANY
ALL RIGHTS RESERVED.

Otis
A United Technologies Company

CIRCUIT DIAGRAM FOR

PBX_BIDI

CAD GENERATED
CADENCE-CONCEPT

DWG	G2A26800MX	
OTIS ENGINEERING CENTER BERLIN, GERMANY		
DRAWN	A. Tutat	ORIGINAL DATE
CHK	M. Dehmlow	2009-12-08
APPD	M. Dehmlow	35 SHEETS
AUTH	CA47A-000528	SHEET 10

OECB_A3
REV 2004-09-06

VRS PHASE TO PHASE INSULATION (CONV)

ROOM=VRS_HIGH_SIDE

COATING_AREA=TRUE

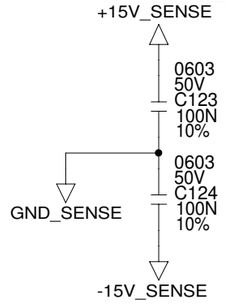

CAPS FOR OPAMP'S

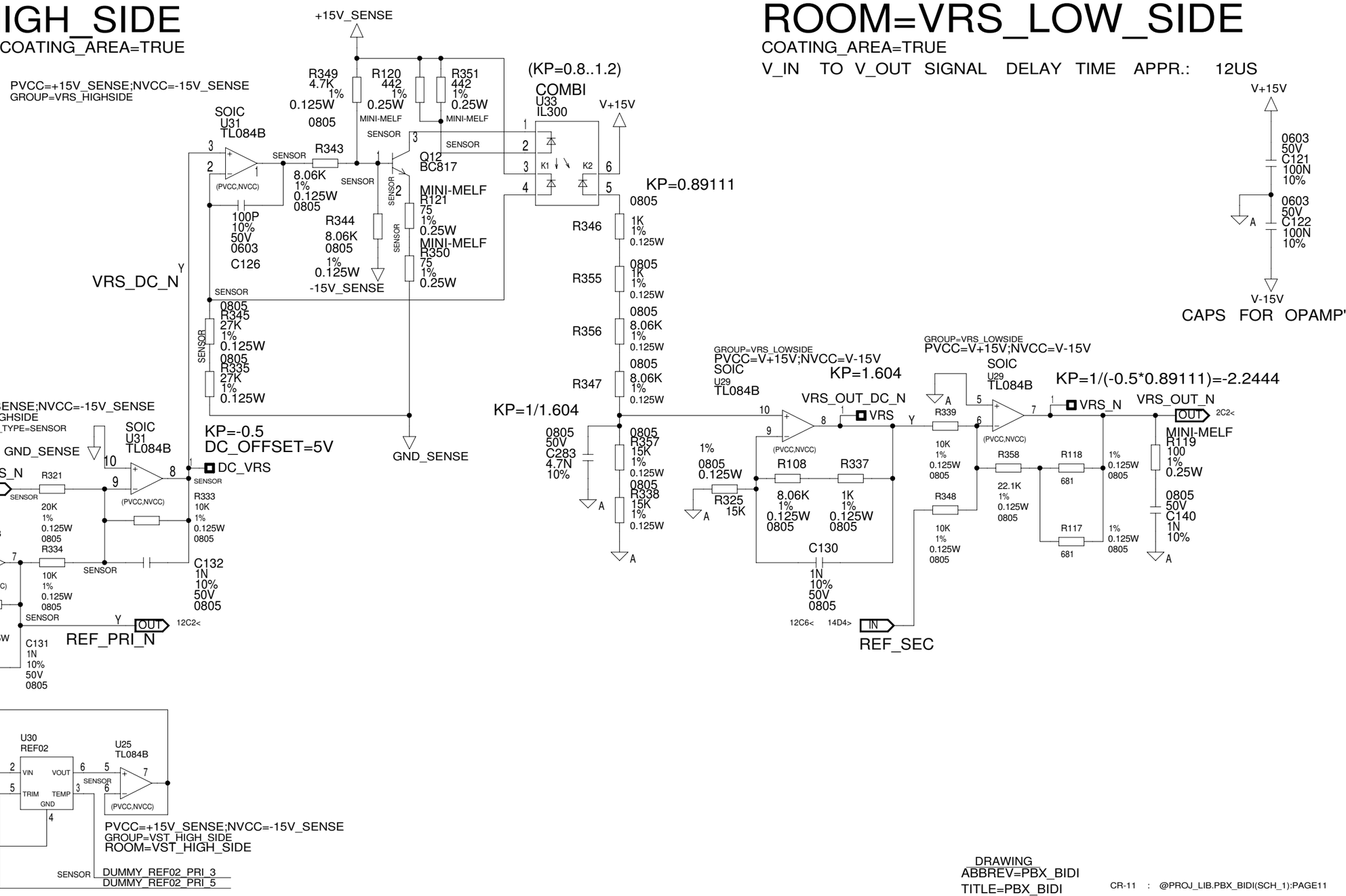

ROOM=VRS_LOW_SIDE

COATING_AREA=TRUE

V_IN TO V_OUT SIGNAL DELAY TIME APPR.: 12US

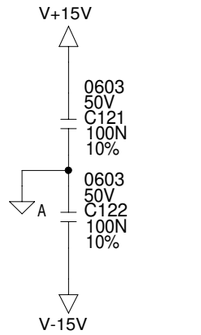

CAPS FOR OPAMP'S

ASSEMBLY_SEC1=NO

DRAWING
ABBREV=PBX_BIDI
TITLE=PBX_BIDI
LAST_MODIFIED=Fri Dec 11 11:16:04 2009

CR-11 : @PROJ_LIB.PBX_BIDI(SCH_1):PAGE11

Changes

WARNING

THIS WORK AND THE INFORMATION IT CONTAINS ARE THE PROPERTY OF OTIS ELEVATOR COMPANY (OTIS). IT IS DELIVERED TO OTHERS ON THE EXPRESS CONDITION THAT IT WILL BE USED ONLY FOR OR ON BEHALF OF OTIS ; THAT NEITHER IT OR NOR THE INFORMATION IT CONTAINS WILL BE REPRODUCED OR DISCLOSED, IN WHOLE OR IN PART, WITHOUT THE PRIOR WRITTEN CONSENT OF OTIS ; AND THAT ON DEMAND IT AND ANY COPIES WILL BE PROMPTLY RETURNED TO OTIS.

UNPUBLISHED WORK (C) OTIS ELEVATOR COMPANY
ALL RIGHTS RESERVED.

Otis
A United Technologies Company

CIRCUIT DIAGRAM FOR

PBX_BIDI

CAD GENERATED
CADENCE-CONCEPT

DWG **G2A26800MX**

OTIS ENGINEERING CENTER
BERLIN, GERMANY

DRAWN	A. Tutat	ORIGINAL DATE
CHK	M. Dehmlow	2009-12-08
APPD	M. Dehmlow	35 SHEETS
AUTH	CA47A-000528	SHEET 11

OECB_A3
REV 2004-09-06

VST PHASE TO PHASE INSULATION (CONV)

ROOM=VST_HIGH_SIDE

COATING_AREA=TRUE

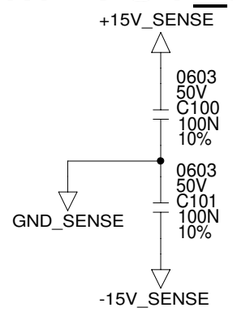

CAPS FOR OPAMP'S

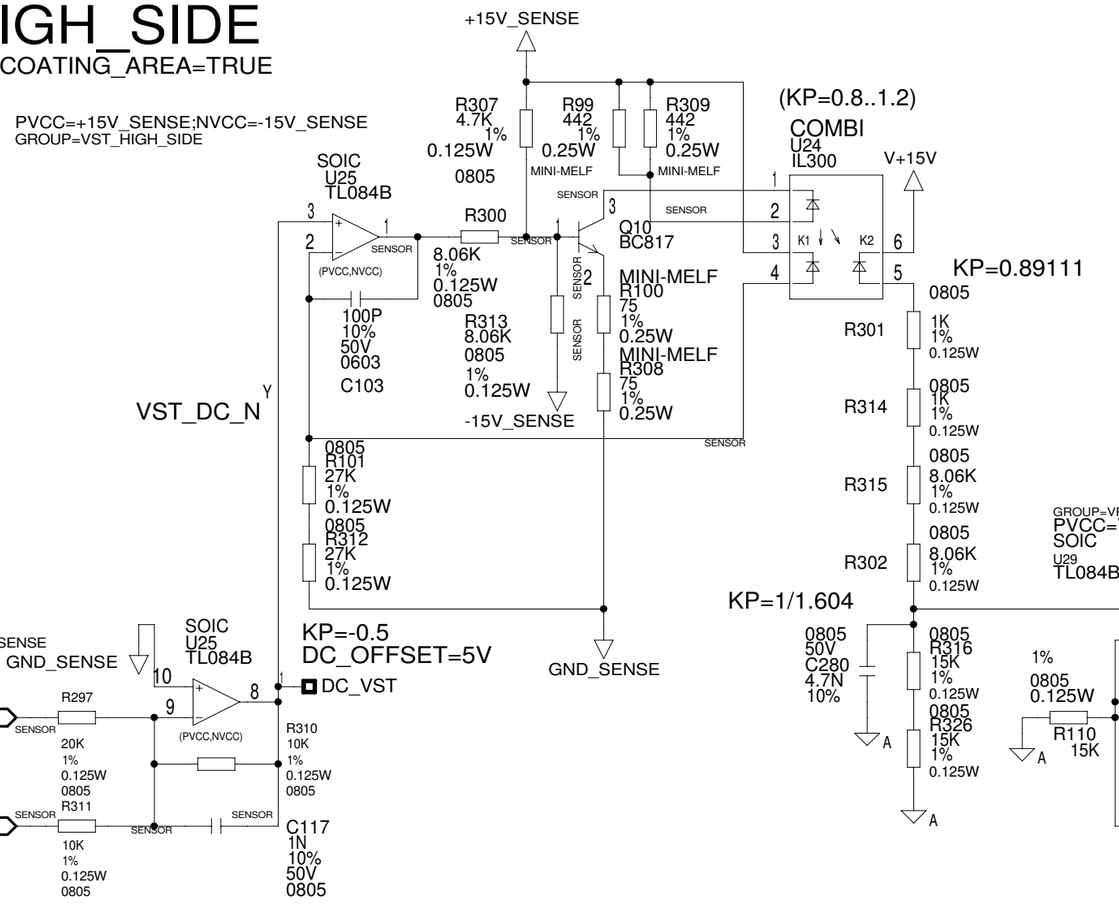

ROOM=VRS_LOW_SIDE

COATING_AREA=TRUE

V_IN TO V_OUT SIGNAL DELAY TIME APPR.: 12US

ASSEMBLY_SEC1=NO

DRAWING
ABBREV=PBX_BIDI
TITLE=PBX_BIDI
LAST_MODIFIED=Fri Dec 11 11:16:19 2009

CR-12 : @PROJ_LIB.PBX_BIDI(SCH_1):PAGE12

Changes

WARNING

THIS WORK AND THE INFORMATION IT CONTAINS ARE THE PROPERTY OF OTIS ELEVATOR COMPANY (OTIS). IT IS DELIVERED TO OTHERS ON THE EXPRESS CONDITION THAT IT WILL BE USED ONLY FOR OR ON BEHALF OF OTIS ; THAT NEITHER IT OR NOR THE INFORMATION IT CONTAINS WILL BE REPRODUCED OR DISCLOSED, IN WHOLE OR IN PART, WITHOUT THE PRIOR WRITTEN CONSENT OF OTIS ; AND THAT ON DEMAND IT AND ANY COPIES WILL BE PROMPTLY RETURNED TO OTIS.

UNPUBLISHED WORK (C) OTIS ELEVATOR COMPANY
ALL RIGHTS RESERVED.

Otis
A United Technologies Company

CIRCUIT DIAGRAM FOR

PBX_BIDI

CAD GENERATED
CADENCE-CONCEPT

DWG **G2A26800MX**

OTIS ENGINEERING CENTER
BERLIN, GERMANY

DRAWN	A. Tutat	ORIGINAL DATE
CHK	M. Dehmlow	2009-12-08
APPD	M. Dehmlow	35 SHEETS
AUTH	CA47A-000528	SHEET 12

OECB_A3
REV 2004-09-06

DC LINK VOLTAGE MEASUREMENT (INV)

DC_LINK VOLTAGE
0V..1000V
DIVIATED TO
0V..5V, WITH KP=0.89111: 0V..4.4555V

ROOM=DC_LINK_MEASURE_HIGH_SIDE
COATING_AREA=TRUE

ROOM=DC_LINK_MEASURE_LOW_SIDE
COATING_AREA=TRUE

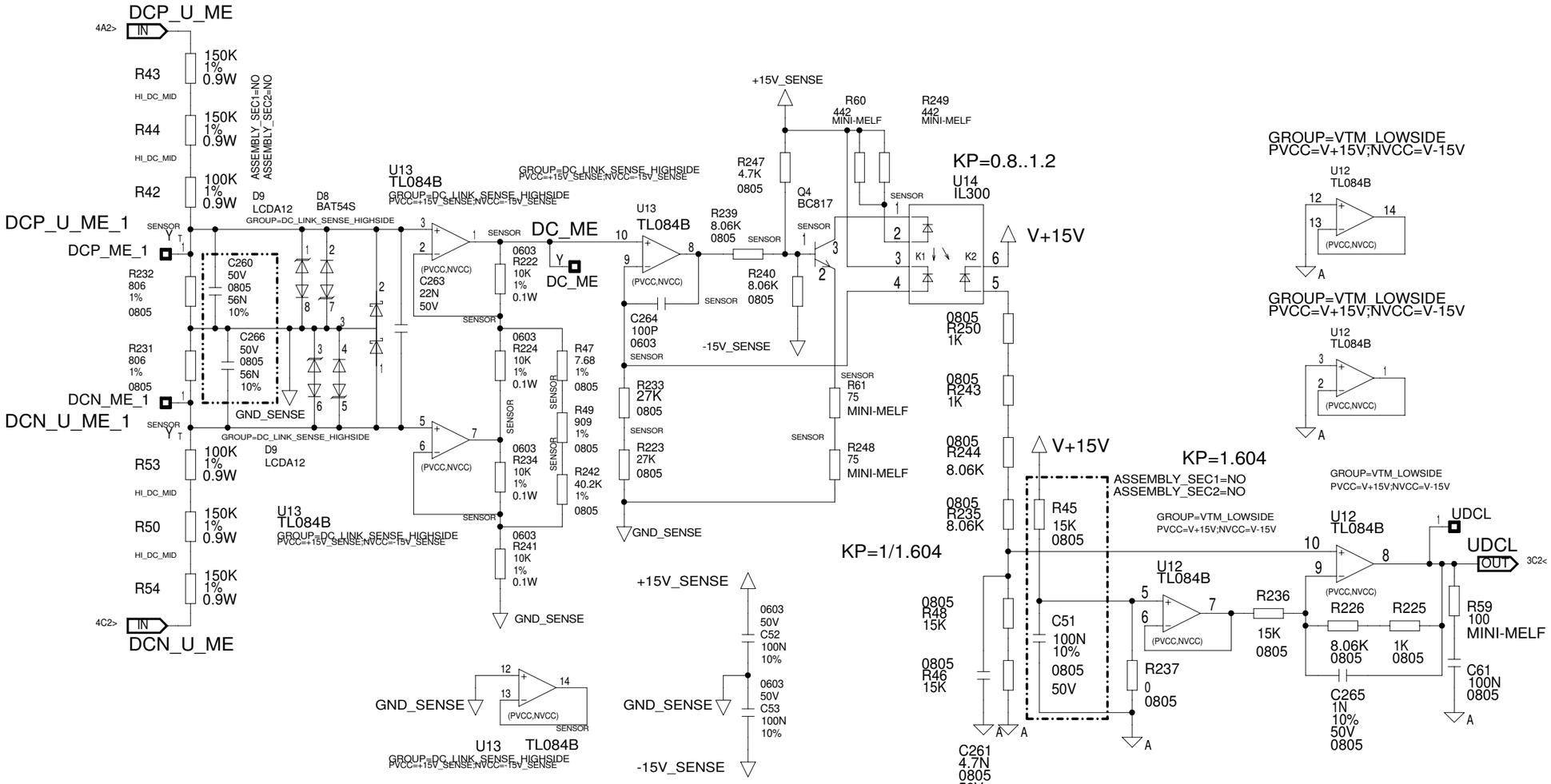

HIGH SIDE VOLTAGE DIVIDER
KP=(1K612/(800K+1K612))
KP=0.002011

DIFFERENTIAL AMPLIFIER
KP=2(1+10K/41K11668)
KP=2.4864

KP=0.002011*2.4864
KP=0.005

ANALOG INSULATOR
KP=48K12/54K
KP=0.89111
I_PIN_4=I_PIN_5

LOW SIDE VOLTAGE DIVIDER + AMPLIFIER
KP=1

ASSEMBLY_SEC2=NO

DRAWING
ABBREV=PBX_BIDI
TITLE=PBX_BIDI
LAST_MODIFIED=Fri Dec 11 11:16:32 2009

CR-13 : @PROJ_LIB.PBX_BIDI(SCH_1):PAGE13

Changes

WARNING
THIS WORK AND THE INFORMATION IT CONTAINS ARE THE PROPERTY OF OTIS ELEVATOR COMPANY (OTIS). IT IS DELIVERED TO OTHERS ON THE EXPRESS CONDITION THAT IT WILL BE USED ONLY FOR OR ON BEHALF OF OTIS ; THAT NEITHER IT OR NOR THE INFORMATION IT CONTAINS WILL BE REPRODUCED OR DISCLOSED, IN WHOLE OR IN PART, WITHOUT THE PRIOR WRITTEN CONSENT OF OTIS ; AND THAT ON DEMAND IT AND ANY COPIES WILL BE PROMPTLY RETURNED TO OTIS.

UNPUBLISHED WORK (C) OTIS ELEVATOR COMPANY
ALL RIGHTS RESERVED.

Otis
A United Technologies Company

CIRCUIT DIAGRAM FOR

PBX_BIDI

CAD GENERATED
CADENCE-CONCEPT

DWG G2A26800MX

OTIS ENGINEERING CENTER
BERLIN, GERMANY

DRAWN	A. Tutat	ORIGINAL DATE
CHK	M. Dehmlow	2009-12-08
APPD	M. Dehmlow	35 SHEETS
AUTH	CA47A-000528	SHEET 13

OECB_A3
REV 2004-09-06

IGBT TEMPERATURE MEASUREMENT

ROOM=IGBT_TEMP_HIGH_SIDE
COATING_AREA=TRUE

ROOM=IGBT_TEMP_LOW_SIDE
COATING_AREA=TRUE

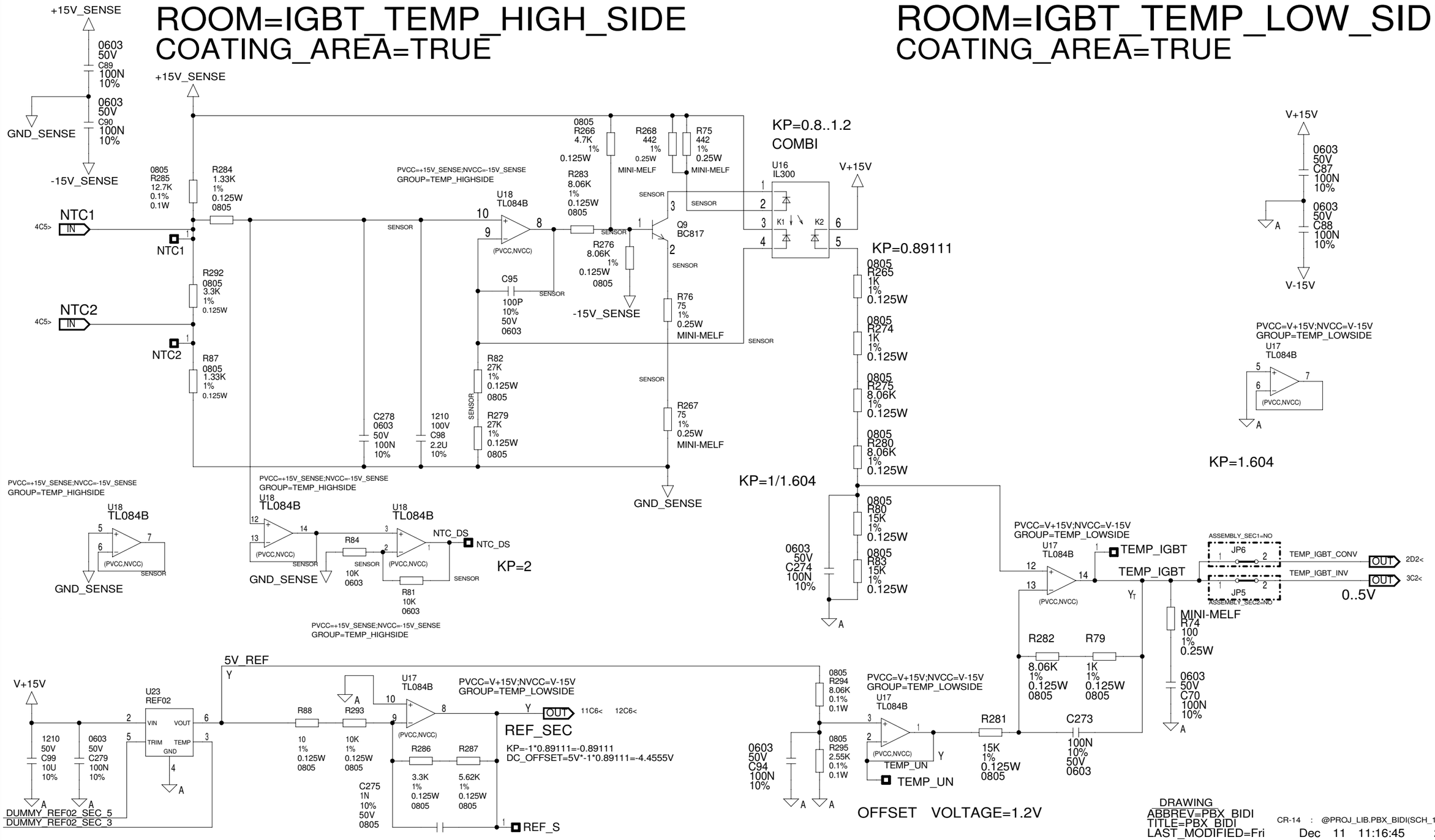

DRAWING
ABBREV=PBX_BIDI
TITLE=PBX_BIDI
LAST_MODIFIED=Fri

CR-14 : @PROJ_LIB.PBX_BIDI(SCH_1):PAGE14
Dec 11 11:16:45 2009

Changes

WARNING
THIS WORK AND THE INFORMATION IT CONTAINS ARE THE PROPERTY OF OTIS ELEVATOR COMPANY (OTIS). IT IS DELIVERED TO OTHERS ON THE EXPRESS CONDITION THAT IT WILL BE USED ONLY FOR OR ON BEHALF OF OTIS ; THAT NEITHER IT OR NOR THE INFORMATION IT CONTAINS WILL BE REPRODUCED OR DISCLOSED, IN WHOLE OR IN PART, WITHOUT THE PRIOR WRITTEN CONSENT OF OTIS ; AND THAT ON DEMAND IT AND ANY COPIES WILL BE PROMPTLY RETURNED TO OTIS.

UNPUBLISHED WORK (C) OTIS ELEVATOR COMPANY
ALL RIGHTS RESERVED.

Otis
A United Technologies Company

CIRCUIT DIAGRAM FOR

PBX_BIDI

CAD GENERATED
CADENCE-CONCEPT

DWG **G2A26800MX**

OTIS ENGINEERING CENTER
BERLIN, GERMANY

DRAWN	**A. Tutat**	ORIGINAL DATE
CHK	**M. Dehmlow**	**2009-12-08**
APPD	**M. Dehmlow**	35 SHEETS
AUTH	**CA47A-000528**	SHEET **14**

OECB_A3
REV 2004-09-06

Title: Netsbypage Report
Design: pbx_bidi
Date: Dec 10 9:31:03 2009

Page wise report of nets and their base nets

Page	Net Name	Scope	Base Net	Location([Zone][dir])
2	24V_SE	PBX_BIDI	24V_SE	2A6< 8B1< 8B1<
2	24V_SE_RTN	PBX_BIDI	24V_SE_RTN	2B6< 8B1< 8B1<
2	CHRG_N	PBX_BIDI	CHRG_N	2C2> 2B4<
2	CHRG_N	PBX_BIDI	CHRG_N	2C2> 2B4<
2	CNV_FLT	PBX_BIDI	CNV_FLT	2B3
2	CNV_OC_FLT	PBX_BIDI	CNV_OC_FLT	2B2
2	DIO_1C-CNV_FLT	PBX_BIDI	CNV_FLT	2B3
2	DIO_2C-DEV_FLT	PBX_BIDI	DIO_2C-DEV_FLT	2B1
2	DIO_3C-PWM_XP	PBX_BIDI	DIO_3C-PWM_XP	2B1
2	DIO_4C-PWM_XN	PBX_BIDI	DIO_4C-PWM_XN	2B1
2	DIO_5C-PWM_YP	PBX_BIDI	DIO_5C-PWM_YP	2B1
2	DIO_6C-PWM_YN	PBX_BIDI	DIO_6C-PWM_YN	2B1
2	DIO_7C-PWM_ZP	PBX_BIDI	DIO_7C-PWM_ZP	2C1
2	DIO_8C-PWM_ZN	PBX_BIDI	DIO_8C-PWM_ZN	2C1
2	DUMMY_CONV_B_IN V_1	PBX_BIDI	DUMMY_CONV_B_IN V_1	2D4
2	DUMMY_CONV_B_IN V_2	PBX_BIDI	DUMMY_CONV_B_IN V_2	2D4
2	DUMMY_CONV_B_IN V_3	PBX_BIDI	DUMMY_CONV_B_IN V_3	2D4
2	DUMMY_CONV_B_IN V_4	PBX_BIDI	DUMMY_CONV_B_IN V_4	2D4
2	DUMMY_CONV_B_IN V_5	PBX_BIDI	DUMMY_CONV_B_IN V_5	2D4
2	ENABLE_RST	PBX_BIDI	ENABLE_RST	2D2> 5C1< 6C1< 7C1<
2	I2C_SCL0_CONV	PBX_BIDI	I2C_SCL0_CONV	2C2> 2B6<
2	I2C_SCL0_CONV	PBX_BIDI	I2C_SCL0_CONV	2C2> 2B6<
2	I2C_SDA0_CONV	PBX_BIDI	I2C_SDA0_CONV	2C2<> 2C6<>
2	I2C_SDA0_CONV	PBX_BIDI	I2C_SDA0_CONV	2C2<> 2C6<>
2	OCT_CONV_N	PBX_BIDI	OCT_CONV_N	5C4> 6C4> 7C4> 2B1<
2	OUT_EN_CONV	PBX_BIDI	OUT_EN_CONV	2C2> 2A5< 2C6<
2	OUT_EN_CONV	PBX_BIDI	OUT_EN_CONV	2C2> 2A5< 2C6<
2	OUT_EN_CONV	PBX_BIDI	OUT_EN_CONV	2C2> 2A5< 2C6<
2	PFAIL_RS	PBX_BIDI	PFAIL_RS	10C7> 2A1<
2	PFAIL_RS_CONV	PBX_BIDI	PFAIL_RS_CONV	2C1
2	PF_IGBT_CONV_OC	PBX_BIDI	PF_IGBT_CONV_OC	5B8> 6B8> 7B8> 2B1<
2	PWM_RN	PBX_BIDI	PWM_RN	2C2> 5D1<
2	PWM_RP	PBX_BIDI	PWM_RP	2C2> 5B1<
2	PWM_SN	PBX_BIDI	PWM_SN	2C2> 6D1<
2	PWM_SP	PBX_BIDI	PWM_SP	2C2> 6B1<
2	PWM_TN	PBX_BIDI	PWM_TN	2C2> 7D1<
2	PWM_TP	PBX_BIDI	PWM_TP	2C2> 7B1<
2	R_MAIN	PBX_BIDI	R_MAIN	2D8> 4B3<
2	R_RES	PBX_BIDI	R_RES	2D6
2	SENSE_IR	PBX_BIDI	SENSE_IR	4D4> 2D2<
2	SENSE_IS	PBX_BIDI	SENSE_IS	4D4> 2D2<
2	S_MAIN	PBX_BIDI	S_MAIN	2D8> 4B6<
2	S_RES	PBX_BIDI	S_RES	2D6
2	TEMP_IGBT_CONV	PBX_BIDI	TEMP_IGBT_CONV	14C8> 2D2<
2	UR	PBX_BIDI	UR	2D7> 9A1<
2	US	PBX_BIDI	US	2D7> 9B1<
2	UT	PBX_BIDI	UT	2D7> 9B1<
2	VRS_OUT_N	PBX_BIDI	VRS_OUT_N	11B8> 2C2<
2	VST_OUT_N	PBX_BIDI	VST_OUT_N	12B8> 2C2<
3	24V_ADC	PBX_BIDI	24V_ADC	3D7
3	24V_SENSE	PBX_BIDI	24V_SENSE	3A2> 8D1<
3	24V_SENSE_RTN	PBX_BIDI	24V_SENSE_RTN	3A2> 8D1<
3	DUMMY_50POL_1	PBX_BIDI	DUMMY_50POL_1	3C1
3	DUMMY_50POL_11	PBX_BIDI	DUMMY_50POL_11	3C1
3	DUMMY_50POL_13	PBX_BIDI	DUMMY_50POL_13	3C1
3	DUMMY_50POL_14	PBX_BIDI	DUMMY_50POL_14	3C1
3	DUMMY_50POL_17	PBX_BIDI	DUMMY_50POL_17	3C1
3	DUMMY_50POL_18	PBX_BIDI	DUMMY_50POL_18	3B1
3	DUMMY_50POL_30	PBX_BIDI	DUMMY_50POL_30	3B1
3	DUMMY_50POL_31	PBX_BIDI	DUMMY_50POL_31	3B1
3	DUMMY_50POL_32	PBX_BIDI	DUMMY_50POL_32	3B1
3	DUMMY_50POL_33	PBX_BIDI	DUMMY_50POL_33	3B1
3	DUMMY_50POL_40	PBX_BIDI	DUMMY_50POL_40	3B1
3	DUMMY_50POL_41	PBX_BIDI	DUMMY_50POL_41	3B1
3	DUMMY_50POL_42	PBX_BIDI	DUMMY_50POL_42	3A1
3	DUMMY_INV_A_INV _1	PBX_BIDI	DUMMY_INV_A_INV _1	3A5
3	DUMMY_INV_A_INV _2	PBX_BIDI	DUMMY_INV_A_INV _2	3A5
3	DUMMY_INV_A_INV _3	PBX_BIDI	DUMMY_INV_A_INV _3	3A5
3	DUMMY_OTI	PBX_BIDI	DUMMY_OTI	3D8
3	DUMMY_SMPS_EN	PBX_BIDI	DUMMY_SMPS_EN	3B6
3	DUMMY_TEMP_TEMP	PBX_BIDI	DUMMY_TEMP_TEMP	3C5
3	DUMMY_TEMP_TRIM	PBX_BIDI	DUMMY_TEMP_TRIM	3C4
3	I2C_SCL0_INV	PBX_BIDI	I2C_SCL0_INV	3B2> 3A6< 3C7<
3	I2C_SCL0_INV	PBX_BIDI	I2C_SCL0_INV	3B2> 3A6< 3C7<
3	I2C_SCL0_INV	PBX_BIDI	I2C_SCL0_INV	3B2> 3A6< 3C7<
3	I2C_SDA0_INV	PBX_BIDI	I2C_SDA0_INV	3A6<> 3B2<> 3C7<>
3	I2C_SDA0_INV	PBX_BIDI	I2C_SDA0_INV	3A6<> 3B2<> 3C7<>
3	I2C_SDA0_INV	PBX_BIDI	I2C_SDA0_INV	3A6<> 3B2<> 3C7<>
3	OCT_INV	PBX_BIDI	OCT_INV	3D3> 3C2<
3	OCT_INV	PBX_BIDI	OCT_INV	3D3> 3C2<
3	OCT_INV_N	PBX_BIDI	OCT_INV_N	5C4> 6C4> 7C4> 3D1<
3	OLOAD_DUMMY	PBX_BIDI	OLOAD_DUMMY	3C1
3	OUT_EN_INV	PBX_BIDI	OUT_EN_INV	3B2> 3A6<
3	OUT_EN_INV	PBX_BIDI	OUT_EN_INV	3B2> 3A6<
3	PF_IGBT_INV	PBX_BIDI	PF_IGBT_INV	3D3> 3C2< 5C1< 6C1< 7C1<
3	PF_IGBT_INV	PBX_BIDI	PF_IGBT_INV	3D3> 3C2< 5C1< 6C1< 7C1<
3	PF_IGBT_INV_OC	PBX_BIDI	PF_IGBT_INV_OC	5B8> 6B8> 7B8> 3D1<
3	PTC_1	PBX_BIDI	PTC_1	3D4
3	PTC_6	PBX_BIDI	PTC_6	3D4
3	PTC_23	PBX_BIDI	PTC_23	3D4
3	PTC_45	PBX_BIDI	PTC_45	3D4
3	PTC_ADC	PBX_BIDI	PTC_ADC	3D7
3	PWM_UN	PBX_BIDI	PWM_UN	3B2> 5D1<

Changes

WARNING
THIS WORK AND THE INFORMATION IT CONTAINS ARE THE PROPERTY OF OTIS ELEVATOR COMPANY (OTIS). IT IS DELIVERED TO OTHERS ON THE EXPRESS CONDITION THAT IT WILL BE USED ONLY FOR OR ON BEHALF OF OTIS ; THAT NEITHER IT OR NOR THE INFORMATION IT CONTAINS WILL BE REPRODUCED OR DISCLOSED, IN WHOLE OR IN PART, WITHOUT THE PRIOR WRITTEN CONSENT OF OTIS ; AND THAT ON DEMAND IT AND ANY COPIES WILL BE PROMPTLY RETURNED TO OTIS.

UNPUBLISHED WORK (C) OTIS ELEVATOR COMPANY
ALL RIGHTS RESERVED.

Otis
A United Technologies Company

CIRCUIT DIAGRAM FOR

PBX_BIDI

CAD GENERATED
CADENCE-CONCEPT

DWG G2A26800MX

OTIS ENGINEERING CENTER
BERLIN, GERMANY

DRAWN	A. Tutat	ORIGINAL DATE
CHK	M. Dehmlow	2009-12-08
APPD	M. Dehmlow	SHEETS
AUTH	CA47A-000528	SHEET 15

OECB_A3
REV 2004-09-06

A3	1	2	3	4	5	6	7	8

3	PWM_UP	PBX_BIDI	PWM_UP	3B2>	5B1<			
3	PWM_VN	PBX_BIDI	PWM_VN	3B2>	6D1<			
3	PWM_VP	PBX_BIDI	PWM_VP	3B2>	6B1<			
3	PWM_WN	PBX_BIDI	PWM_WN	3B2>	7D1<			
3	PWM_WP	PBX_BIDI	PWM_WP	3B2>	7B1<			
3	SENSE_IU	PBX_BIDI	SENSE_IU	4D4>	3C2<			
3	SENSE_IV	PBX_BIDI	SENSE_IV	4D4>	3C2<			
3	SENSE_IW	PBX_BIDI	SENSE_IW	4D4>	3C2<			
3	SW_TEMP_SENSOR	PBX_BIDI	SW_TEMP_SENSOR	3B7				
3	TEMP_IGBT_INV	PBX_BIDI	TEMP_IGBT_INV	14C8>	3C2<			
3	UDCL	PBX_BIDI	UDCL	13C7>	3C2<			
4	DCN_DIS	PBX_BIDI	DCN_DIS	4C2>	4A7<			
4	DCN_DIS	PBX_BIDI	DCN_DIS	4C2>	4A7<			
4	DCN_LED	PBX_BIDI	DCN_LED	4C7>	9D3<			
4	DCN_U_ME	PBX_BIDI	DCN_U_ME	4C2>	13C2<			
4	DCP_DIS	PBX_BIDI	DCP_DIS	4A2>	4A7<			
4	DCP_DIS	PBX_BIDI	DCP_DIS	4A2>	4A7<			
4	DCP_LED	PBX_BIDI	DCP_LED	4A7>	9C4<			
4	DCP_U_ME	PBX_BIDI	DCP_U_ME	4A2>	13A2<			
4	DUMMY_RU_NTC1	PBX_BIDI	DUMMY_RU_NTC1	4C2				
4	DUMMY_RU_NTC2	PBX_BIDI	DUMMY_RU_NTC2	4C2				
4	DUMMY_TW_NTC1	PBX_BIDI	DUMMY_TW_NTC1	4C8				
4	DUMMY_TW_NTC2	PBX_BIDI	DUMMY_TW_NTC2	4C8				
4	I_RU	PBX_BIDI	I_RU	4D3				
4	I_SV	PBX_BIDI	I_SV	4D3				
4	I_W	PBX_BIDI	I_W	4D3				
4	NTC1	PBX_BIDI	NTC1	4C5>	14B1<			
4	NTC2	PBX_BIDI	NTC2	4C5>	14B1<			
4	PE_RU	PBX_BIDI	PE_RU	4C2				
4	PE_SV	PBX_BIDI	PE_SV	4C5				
4	PE_TW	PBX_BIDI	PE_TW	4C8				
4	RUN	PBX_BIDI	RUN	4C1				
4	RUN_E21	PBX_BIDI	RUN_E21	5D8>	4C1<			
4	RUN_E22	PBX_BIDI	RUN_E22	5D8>	4C1<			
4	RUN_E23	PBX_BIDI	RUN_E23	5D8>	4C1<			
4	RUN_G21	PBX_BIDI	RUN_G21	5D8>	4B1<			
4	RUN_G22	PBX_BIDI	RUN_G22	5D8>	4C1<			
4	RUN_G23	PBX_BIDI	RUN_G23	5D8>	4C1<			
4	RUO	PBX_BIDI	RUO	4B3				
4	RUP	PBX_BIDI	RUP	4A1				
4	RUP_C1	PBX_BIDI	RUP_C1	4A1<	5B5<			
4	RUP_E11	PBX_BIDI	RUP_E11	5B8>	4B1<			
4	RUP_E12	PBX_BIDI	RUP_E12	5C8>	4B1<			
4	RUP_E13	PBX_BIDI	RUP_E13	5C8>	4B1<			
4	RUP_G11	PBX_BIDI	RUP_G11	5B8>	4B1<			
4	RUP_G12	PBX_BIDI	RUP_G12	5B8>	4B1<			
4	RUP_G13	PBX_BIDI	RUP_G13	5B8>	4B1<			
4	R_MAIN	PBX_BIDI	R_MAIN	2D8>	4B3<			
4	SENSE_IR	PBX_BIDI	SENSE_IR	4D4>	2D2<			
4	SENSE_IS	PBX_BIDI	SENSE_IS	4D4>	2D2<			
4	SENSE_IU	PBX_BIDI	SENSE_IU	4D4>	3C2<			
4	SENSE_IV	PBX_BIDI	SENSE_IV	4D4>	3C2<			
4	SENSE_IW	PBX_BIDI	SENSE_IW	4D4>	3C2<			
4	SVN	PBX_BIDI	SVN	4C4				
4	SVN_E21	PBX_BIDI	SVN_E21	6D8>	4C4<			
4	SVN_E22	PBX_BIDI	SVN_E22	6D8>	4C4<			
4	SVN_E23	PBX_BIDI	SVN_E23	6D8>	4C4<			
4	SVN_G21	PBX_BIDI	SVN_G21	6D8>	4B4<			
4	SVN_G22	PBX_BIDI	SVN_G22	6D8>	4C4<			
4	SVN_G23	PBX_BIDI	SVN_G23	6D8>	4C4<			
4	SVO	PBX_BIDI	SVO	4B6				
4	SVP	PBX_BIDI	SVP	4A4				
4	SVP_C1	PBX_BIDI	SVP_C1	4A4<	6B5<			
4	SVP_E11	PBX_BIDI	SVP_E11	6B8>	4B4<			
4	SVP_E12	PBX_BIDI	SVP_E12	6C8>	4B4<			
4	SVP_E13	PBX_BIDI	SVP_E13	6C8>	4B4<			
4	SVP_G11	PBX_BIDI	SVP_G11	6B8>	4B4<			
4	SVP_G12	PBX_BIDI	SVP_G12	6B8>	4B4<			
4	SVP_G13	PBX_BIDI	SVP_G13	6B8>	4B4<			
4	S_MAIN	PBX_BIDI	S_MAIN	2D8>	4B6<			
4	TWN	PBX_BIDI	TWN	4C6				
4	TWN_E21	PBX_BIDI	TWN_E21	7D8>	4C6<			
4	TWN_E22	PBX_BIDI	TWN_E22	7D8>	4C6<			
4	TWN_E23	PBX_BIDI	TWN_E23	7D8>	4C6<			
4	TWN_G21	PBX_BIDI	TWN_G21	7D8>	4B6<			
4	TWN_G22	PBX_BIDI	TWN_G22	7D8>	4C6<			
4	TWN_G23	PBX_BIDI	TWN_G23	7D8>	4C6<			
4	TWO	PBX_BIDI	TWO	4B8				
4	TWP	PBX_BIDI	TWP	4A6				
4	TWP_C1	PBX_BIDI	TWP_C1	4A6<	7B5<			
4	TWP_E11	PBX_BIDI	TWP_E11	7B8>	4B6<			
4	TWP_E12	PBX_BIDI	TWP_E12	7C8>	4B6<			
4	TWP_E13	PBX_BIDI	TWP_E13	7C8>	4B6<			
4	TWP_G11	PBX_BIDI	TWP_G11	7B8>	4B6<			
4	TWP_G12	PBX_BIDI	TWP_G12	7B8>	4B6<			
4	TWP_G13	PBX_BIDI	TWP_G13	7B8>	4B6<			
5	+27V_RU_N	PBX_BIDI	+27V_RU_N	5A8>	5B6<	5C3<		
5	+27V_RU_N	PBX_BIDI	+27V_RU_N	5A8>	5B6<	5C3<		
5	+27V_RU_N	PBX_BIDI	+27V_RU_N	5A8>	5B6<	5C3<		
5	+27V_RU_N_RTN	PBX_BIDI	+27V_RU_N_RTN	5A8>	5B6<	5D3<		
5	+27V_RU_N_RTN	PBX_BIDI	+27V_RU_N_RTN	5A8>	5B6<	5D3<		
5	+27V_RU_N_RTN	PBX_BIDI	+27V_RU_N_RTN	5A8>	5B6<	5D3<		
5	+27V_RU_P	PBX_BIDI	+27V_RU_P	5A8>	5B3<	5B5<		
5	+27V_RU_P	PBX_BIDI	+27V_RU_P	5A8>	5B3<	5B5<		
5	+27V_RU_P	PBX_BIDI	+27V_RU_P	5A8>	5B3<	5B5<		
5	+27V_RU_P_RTN	PBX_BIDI	+27V_RU_P_RTN	5A8>	5B5<	5C3<		
5	+27V_RU_P_RTN	PBX_BIDI	+27V_RU_P_RTN	5A8>	5B5<	5C3<		
5	+27V_RU_P_RTN	PBX_BIDI	+27V_RU_P_RTN	5A8>	5B5<	5C3<		
5	24V_DRIVER	PBX_BIDI	24V_DRIVER	8B3>	5A1<	6A1<	7A1<	
5	24V_DRIVER_RTN	PBX_BIDI	24V_DRIVER_RTN	8B3>	5A1<	6A1<	7A1<	
5	DRAIN_RU	PBX_BIDI	DRAIN_RU	5A4				
5	DUMMY_LED1_RU_N	PBX_BIDI	DUMMY_LED1_RU_N	5D3				
5	DUMMY_LED1_RU_P	PBX_BIDI	DUMMY_LED1_RU_P	5C3				
5	DUMMY_LED2_RU_N	PBX_BIDI	DUMMY_LED2_RU_N	5D3				
5	DUMMY_LED2_RU_P	PBX_BIDI	DUMMY_LED2_RU_P	5C3				
5	ENABLE_RST	PBX_BIDI	ENABLE_RST	2D2>	5C1<	6C1<	7C1<	
5	GATE_SENSE_RU	PBX_BIDI	GATE_SENSE_RU	5A4				
5	I_SENSE_RU	PBX_BIDI	I_SENSE_RU	5A4				
5	OCT_CONV_N	PBX_BIDI	OCT_CONV_N	5C4>	6C4>	7C4>	2B1<	
5	OCT_INV_N	PBX_BIDI	OCT_INV_N	5C4>	6C4>	7C4>	3D1<	

Changes

WARNING

THIS WORK AND THE INFORMATION IT CONTAINS ARE THE PROPERTY OF OTIS ELEVATOR COMPANY (OTIS). IT IS DELIVERED TO OTHERS ON THE EXPRESS CONDITION THAT IT WILL BE USED ONLY FOR OR ON BEHALF OF OTIS ; THAT NEITHER IT OR NOR THE INFORMATION IT CONTAINS WILL BE REPRODUCED OR DISCLOSED, IN WHOLE OR IN PART, WITHOUT THE PRIOR WRITTEN CONSENT OF OTIS ; AND THAT ON DEMAND IT AND ANY COPIES WILL BE PROMPTLY RETURNED TO OTIS.

UNPUBLISHED WORK (C) OTIS ELEVATOR COMPANY
ALL RIGHTS RESERVED.

Otis
A United Technologies Company

CIRCUIT DIAGRAM FOR

PBX_BIDI

CAD GENERATED
CADENCE-CONCEPT

DWG G2A26800MX

OTIS ENGINEERING CENTER
BERLIN, GERMANY

DRAWN	A. Tutat	ORIGINAL DATE	
CHK	M. Dehmlow	2009-12-08	
APPD	M. Dehmlow	SHEETS	
AUTH	CA47A-000528	SHEET 16	

OECB_A3
REV 2004-09-06

5	PF_IGBT_CONV_OC	PBX_BIDI	PF_IGBT_CONV_OC	5B8>	6B8>	7B8>	2B1<	
5	PF_IGBT_INV	PBX_BIDI	PF_IGBT_INV	3D3>	3C2<	5C1<	6C1<	
				7C1<				
5	PF_IGBT_INV_OC	PBX_BIDI	PF_IGBT_INV_OC	5B8>	6B8>	7B8>	3D1<	
5	PWM_RN	PBX_BIDI	PWM_RN	2C2>	5D1<			
5	PWM_RP	PBX_BIDI	PWM_RP	2C2>	5B1<			
5	PWM_UN	PBX_BIDI	PWM_UN	3B2>	5D1<			
5	PWM_UP	PBX_BIDI	PWM_UP	3B2>	5B1<			
5	PWM_VCC_RU	PBX_BIDI	PWM_VCC_RU	5A3				
5	REF_2V5_RU_N	PBX_BIDI	REF_2V5_RU_N	5B7				
5	REF_2V5_RU_P	PBX_BIDI	REF_2V5_RU_P	5B6				
5	REF_3V9_RU_N	PBX_BIDI	REF_3V9_RU_N	5A7				
5	REF_3V9_RU_P	PBX_BIDI	REF_3V9_RU_P	5A6				
5	RUN_E21	PBX_BIDI	RUN_E21	5D8>	4C1<			
5	RUN_E22	PBX_BIDI	RUN_E22	5D8>	4C1<			
5	RUN_E23	PBX_BIDI	RUN_E23	5D8>	4C1<			
5	RUN_G21	PBX_BIDI	RUN_G21	5D8>	4B1<			
5	RUN_G22	PBX_BIDI	RUN_G22	5D8>	4C1<			
5	RUN_G23	PBX_BIDI	RUN_G23	5D8>	4C1<			
5	RUP_C1	PBX_BIDI	RUP_C1	4A1<	5B5<			
5	RUP_E11	PBX_BIDI	RUP_E11	5B8>	4B1<			
5	RUP_E12	PBX_BIDI	RUP_E12	5C8>	4B1<			
5	RUP_E13	PBX_BIDI	RUP_E13	5C8>	4B1<			
5	RUP_G11	PBX_BIDI	RUP_G11	5B8>	4B1<			
5	RUP_G12	PBX_BIDI	RUP_G12	5B8>	4B1<			
5	RUP_G13	PBX_BIDI	RUP_G13	5B8>	4B1<			
6	+27V_SV_N	PBX_BIDI	+27V_SV_N	6A8>	6B6<	6C3<		
6	+27V_SV_N	PBX_BIDI	+27V_SV_N	6A8>	6B6<	6C3<		
6	+27V_SV_N	PBX_BIDI	+27V_SV_N	6A8>	6B6<	6C3<		
6	+27V_SV_N_RTN	PBX_BIDI	+27V_SV_N_RTN	6A8>	6B6<	6D3<		
6	+27V_SV_N_RTN	PBX_BIDI	+27V_SV_N_RTN	6A8>	6B6<	6D3<		
6	+27V_SV_N_RTN	PBX_BIDI	+27V_SV_N_RTN	6A8>	6B6<	6D3<		
6	+27V_SV_P	PBX_BIDI	+27V_SV_P	6A8>	6B3<	6B5<		
6	+27V_SV_P	PBX_BIDI	+27V_SV_P	6A8>	6B3<	6B5<		
6	+27V_SV_P	PBX_BIDI	+27V_SV_P	6A8>	6B3<	6B5<		
6	+27V_SV_P_RTN	PBX_BIDI	+27V_SV_P_RTN	6A8>	6B5<	6C3<		
6	+27V_SV_P_RTN	PBX_BIDI	+27V_SV_P_RTN	6A8>	6B5<	6C3<		
6	+27V_SV_P_RTN	PBX_BIDI	+27V_SV_P_RTN	6A8>	6B5<	6C3<		
6	24V_DRIVER	PBX_BIDI	24V_DRIVER	8B3>	5A1<	6A1<	7A1<	
6	24V_DRIVER_RTN	PBX_BIDI	24V_DRIVER_RTN	8B3>	5A1<	6A1<	7A1<	
6	DRAIN_SV	PBX_BIDI	DRAIN_SV	6A4				
6	DUMMY_LED1_SV_N	PBX_BIDI	DUMMY_LED1_SV_N	6D3				
6	DUMMY_LED1_SV_P	PBX_BIDI	DUMMY_LED1_SV_P	6C3				
6	DUMMY_LED2_SV_N	PBX_BIDI	DUMMY_LED2_SV_N	6D3				
6	DUMMY_LED2_SV_P	PBX_BIDI	DUMMY_LED2_SV_P	6C3				
6	ENABLE_RST	PBX_BIDI	ENABLE_RST	2D2>	5C1<	6C1<	7C1<	
6	GATE_SENSE_SV	PBX_BIDI	GATE_SENSE_SV	6A4				
6	I_SENSE_SV	PBX_BIDI	I_SENSE_SV	6A4				
6	OCT_CONV_N	PBX_BIDI	OCT_CONV_N	5C4>	6C4>	7C4>	2B1<	
6	OCT_INV_N	PBX_BIDI	OCT_INV_N	5C4>	6C4>	7C4>	3D1<	
6	PF_IGBT_CONV_OC	PBX_BIDI	PF_IGBT_CONV_OC	5B8>	6B8>	7B8>	2B1<	
6	PF_IGBT_INV	PBX_BIDI	PF_IGBT_INV	3D3>	3C2<	5C1<	6C1<	
				7C1<				
6	PF_IGBT_INV_OC	PBX_BIDI	PF_IGBT_INV_OC	5B8>	6B8>	7B8>	3D1<	
6	PWM_SN	PBX_BIDI	PWM_SN	2C2>	6D1<			
6	PWM_SP	PBX_BIDI	PWM_SP	2C2>	6B1<			
6	PWM_VCC_SV	PBX_BIDI	PWM_VCC_SV	6A3				
6	PWM_VN	PBX_BIDI	PWM_VN	3B2>	6D1<			
6	PWM_VP	PBX_BIDI	PWM_VP	3B2>	6B1<			
6	REF_2V5_SV_N	PBX_BIDI	REF_2V5_SV_N	6B7				
6	REF_2V5_SV_P	PBX_BIDI	REF_2V5_SV_P	6B6				
6	REF_3V9_SV_N	PBX_BIDI	REF_3V9_SV_N	6A7				
6	REF_3V9_SV_P	PBX_BIDI	REF_3V9_SV_P	6A6				
6	SVN_E21	PBX_BIDI	SVN_E21	6D8>	4C4<			
6	SVN_E22	PBX_BIDI	SVN_E22	6D8>	4C4<			
6	SVN_E23	PBX_BIDI	SVN_E23	6D8>	4C4<			
6	SVN_G21	PBX_BIDI	SVN_G21	6D8>	4B4<			
6	SVN_G22	PBX_BIDI	SVN_G22	6D8>	4C4<			
6	SVN_G23	PBX_BIDI	SVN_G23	6D8>	4C4<			
6	SVP_C1	PBX_BIDI	SVP_C1	4A4<	6B5<			
6	SVP_E11	PBX_BIDI	SVP_E11	6B8>	4B4<			
6	SVP_E12	PBX_BIDI	SVP_E12	6C8>	4B4<			
6	SVP_E13	PBX_BIDI	SVP_E13	6C8>	4B4<			
6	SVP_G11	PBX_BIDI	SVP_G11	6B8>	4B4<			
6	SVP_G12	PBX_BIDI	SVP_G12	6B8>	4B4<			
6	SVP_G13	PBX_BIDI	SVP_G13	6B8>	4B4<			
7	+27V_TW_N	PBX_BIDI	+27V_TW_N	7A8>	7B6<	7C3<		
7	+27V_TW_N	PBX_BIDI	+27V_TW_N	7A8>	7B6<	7C3<		
7	+27V_TW_N	PBX_BIDI	+27V_TW_N	7A8>	7B6<	7C3<		
7	+27V_TW_N_RTN	PBX_BIDI	+27V_TW_N_RTN	7A8>	7B6<	7D3<		
7	+27V_TW_N_RTN	PBX_BIDI	+27V_TW_N_RTN	7A8>	7B6<	7D3<		
7	+27V_TW_N_RTN	PBX_BIDI	+27V_TW_N_RTN	7A8>	7B6<	7D3<		
7	+27V_TW_P	PBX_BIDI	+27V_TW_P	7A8>	7B3<	7B5<		
7	+27V_TW_P	PBX_BIDI	+27V_TW_P	7A8>	7B3<	7B5<		
7	+27V_TW_P	PBX_BIDI	+27V_TW_P	7A8>	7B3<	7B5<		
7	+27V_TW_P_RTN	PBX_BIDI	+27V_TW_P_RTN	7A8>	7B5<	7C3<		
7	+27V_TW_P_RTN	PBX_BIDI	+27V_TW_P_RTN	7A8>	7B5<	7C3<		
7	+27V_TW_P_RTN	PBX_BIDI	+27V_TW_P_RTN	7A8>	7B5<	7C3<		
7	24V_DRIVER	PBX_BIDI	24V_DRIVER	8B3>	5A1<	6A1<	7A1<	
7	24V_DRIVER_RTN	PBX_BIDI	24V_DRIVER_RTN	8B3>	5A1<	6A1<	7A1<	
7	DRAIN_TW	PBX_BIDI	DRAIN_TW	7A4				
7	DUMMY_LED1_TW_N	PBX_BIDI	DUMMY_LED1_TW_N	7D3				
7	DUMMY_LED1_TW_P	PBX_BIDI	DUMMY_LED1_TW_P	7C3				
7	DUMMY_LED2_TW_N	PBX_BIDI	DUMMY_LED2_TW_N	7D3				
7	DUMMY_LED2_TW_P	PBX_BIDI	DUMMY_LED2_TW_P	7C3				
7	ENABLE_RST	PBX_BIDI	ENABLE_RST	2D2>	5C1<	6C1<	7C1<	
7	GATE_SENSE_TW	PBX_BIDI	GATE_SENSE_TW	7A4				
7	I_SENSE_TW	PBX_BIDI	I_SENSE_TW	7A4				
7	OCT_CONV_N	PBX_BIDI	OCT_CONV_N	5C4>	6C4>	7C4>	2B1<	
7	OCT_INV_N	PBX_BIDI	OCT_INV_N	5C4>	6C4>	7C4>	3D1<	
7	PF_IGBT_CONV_OC	PBX_BIDI	PF_IGBT_CONV_OC	5B8>	6B8>	7B8>	2B1<	
7	PF_IGBT_INV	PBX_BIDI	PF_IGBT_INV	3D3>	3C2<	5C1<	6C1<	
				7C1<				
7	PF_IGBT_INV_OC	PBX_BIDI	PF_IGBT_INV_OC	5B8>	6B8>	7B8>	3D1<	
7	PWM_TN	PBX_BIDI	PWM_TN	2C2>	7D1<			
7	PWM_TP	PBX_BIDI	PWM_TP	2C2>	7B1<			
7	PWM_VCC_TW	PBX_BIDI	PWM_VCC_TW	7A3				
7	PWM_WN	PBX_BIDI	PWM_WN	3B2>	7D1<			
7	PWM_WP	PBX_BIDI	PWM_WP	3B2>	7B1<			
7	REF_2V5_TW_N	PBX_BIDI	REF_2V5_TW_N	7B7				

Changes

WARNING

THIS WORK AND THE INFORMATION IT CONTAINS ARE THE PROPERTY OF OTIS ELEVATOR COMPANY (OTIS). IT IS DELIVERED TO OTHERS ON THE EXPRESS CONDITION THAT IT WILL BE USED ONLY FOR OR ON BEHALF OF OTIS ; THAT NEITHER IT OR NOR THE INFORMATION IT CONTAINS WILL BE REPRODUCED OR DISCLOSED, IN WHOLE OR IN PART, WITHOUT THE PRIOR WRITTEN CONSENT OF OTIS ; AND THAT ON DEMAND IT AND ANY COPIES WILL BE PROMPTLY RETURNED TO OTIS.

UNPUBLISHED WORK (C) OTIS ELEVATOR COMPANY
ALL RIGHTS RESERVED.

Otis
A United Technologies Company

CIRCUIT DIAGRAM FOR

PBX_BIDI

CAD GENERATED
CADENCE-CONCEPT

DWG G2A26800MX

OTIS ENGINEERING CENTER
BERLIN, GERMANY

DRAWN	A. Tutat	ORIGINAL DATE	
CHK	M. Dehmlow	2009-12-08	
APPD	M. Dehmlow	SHEETS	
AUTH	CA47A-000528	SHEET 17	

7	REF_2V5_TW_P	PBX_BIDI	REF_2V5_TW_P	7B6			
7	REF_3V9_TW_N	PBX_BIDI	REF_3V9_TW_N	7A7			
7	REF_3V9_TW_P	PBX_BIDI	REF_3V9_TW_P	7A6			
7	TWN_E21	PBX_BIDI	TWN_E21	7D8>	4C6<		
7	TWN_E22	PBX_BIDI	TWN_E22	7D8>	4C6<		
7	TWN_E23	PBX_BIDI	TWN_E23	7D8>	4C6<		
7	TWN_G21	PBX_BIDI	TWN_G21	7D8>	4B6<		
7	TWN_G22	PBX_BIDI	TWN_G22	7D8>	4C6<		
7	TWN_G23	PBX_BIDI	TWN_G23	7D8>	4C6<		
7	TWP_C1	PBX_BIDI	TWP_C1	4A6<	7B5<		
7	TWP_E11	PBX_BIDI	TWP_E11	7B8>	4B6<		
7	TWP_E12	PBX_BIDI	TWP_E12	7C8>	4B6<		
7	TWP_E13	PBX_BIDI	TWP_E13	7C8>	4B6<		
7	TWP_G11	PBX_BIDI	TWP_G11	7B8>	4B6<		
7	TWP_G12	PBX_BIDI	TWP_G12	7B8>	4B6<		
7	TWP_G13	PBX_BIDI	TWP_G13	7B8>	4B6<		
8	24V_DRIVER	PBX_BIDI	24V_DRIVER	8B3>	5A1<	6A1<	7A1<
8	24V_DRIVER_RTN	PBX_BIDI	24V_DRIVER_RTN	8B3>	5A1<	6A1<	7A1<
8	24V_SE	PBX_BIDI	24V_SE	2A6<	8B1<	8B1<	
8	24V_SE	PBX_BIDI	24V_SE	2A6<	8B1<	8B1<	
8	24V_SENSE	PBX_BIDI	24V_SENSE	3A2>	8D1<		
8	24V_SENSE_RTN	PBX_BIDI	24V_SENSE_RTN	3A2>	8D1<		
8	24V_SE_RTN	PBX_BIDI	24V_SE_RTN	2B6<	8B1<	8B1<	
8	24V_SE_RTN	PBX_BIDI	24V_SE_RTN	2B6<	8B1<	8B1<	
8	24V_SMPS_SENSE	PBX_BIDI	24V_SMPS_SENSE	8B2			
8	24V_SMPS_SENSE_RTN	PBX_BIDI	24V_SMPS_SENSE_RTN	8D4			
8	24V_SW	PBX_BIDI	24V_SW	8A1			
8	24V_SW_RTN	PBX_BIDI	24V_SW_RTN	8A1			
8	ISENSE	PBX_BIDI	ISENSE	8C5			
8	I_SENSE_PWM_CONTROLLER	PBX_BIDI	I_SENSE_PWM_CONTROLLER	8D5			
8	SENSE_PWM_CONTROLLER_SUPPLY	PBX_BIDI	SENSE_PWM_CONTROLLER_SUPPLY	8B3			
8	SMPS_SENSE_DRAIN	PBX_BIDI	SMPS_SENSE_DRAIN	8C5			
8	SMPS_SENSE_GATE	PBX_BIDI	SMPS_SENSE_GATE	8C5			
8	VCC_PWM_CONTROLLER	PBX_BIDI	VCC_PWM_CONTROLLER	8C4			
9	DCN_LED	PBX_BIDI	DCN_LED	4C7>	9D3<		
9	DCN_LED_1	PBX_BIDI	DCN_LED_1	9D3			
9	DCN_LED_2	PBX_BIDI	DCN_LED_2	9D4			
9	DCN_LED_3	PBX_BIDI	DCN_LED_3	9D4			
9	DCN_LED_4	PBX_BIDI	DCN_LED_4	9D4			
9	DCN_LED_5	PBX_BIDI	DCN_LED_5	9D4			
9	DCN_LED_6	PBX_BIDI	DCN_LED_6	9D5			
9	DCP_LED	PBX_BIDI	DCP_LED	4A7>	9C4<		
9	UR	PBX_BIDI	UR	2D7>	9A1<		
9	UR_LOW_IMP	PBX_BIDI	UR_LOW_IMP	9A3			
9	US	PBX_BIDI	US	2D7>	9B1<		
9	US_LOW_IMP	PBX_BIDI	US_LOW_IMP	9B3			
9	UT	PBX_BIDI	UT	2D7>	9B1<		
9	UT_LOW_IMP	PBX_BIDI	UT_LOW_IMP	9B3			
9	VRS_N	PBX_BIDI	VRS_N	9A6>	10B1<	11C2<	
9	VST_N	PBX_BIDI	VST_N	9B6>	12C2<		

10	CONTROL_555	PBX_BIDI	CONTROL_555	10C3			
10	DISCH_THRES_555	PBX_BIDI	DISCH_THRES_555	10C4			
10	DUMMY_COMP_A	PBX_BIDI	DUMMY_COMP_A	10B7			
10	DUMMY_COMP_B	PBX_BIDI	DUMMY_COMP_B	10B8			
10	GATE_TO_TRIGGER	PBX_BIDI	GATE_TO_TRIGGER	10C3			
10	OUTPUT_555	PBX_BIDI	OUTPUT_555	10C4			
10	OUTPUT_TP_555	PBX_BIDI	OUTPUT_TP_555	10C4			
10	PFAIL_COMP	PBX_BIDI	PFAIL_COMP	10C3			
10	PFAIL_N_FILTERED	PBX_BIDI	PFAIL_N_FILTERED	10C1			
10	PFAIL_RS	PBX_BIDI	PFAIL_RS	10C7>	2A1<		
10	REF_N	PBX_BIDI	REF_N	10C2			
10	REF_P	PBX_BIDI	REF_P	10C2			
10	TRIGGER_555	PBX_BIDI	TRIGGER_555	10C3			
10	VRS_N	PBX_BIDI	VRS_N	9A6>	10B1<	11C2<	
10	VRS_N_RECTIFIED	PBX_BIDI	VRS_N_RECTIFIED	10B3			
11	DUMMY_REF02_PRI_3	PBX_BIDI	DUMMY_REF02_PRI_3	11D2			
11	DUMMY_REF02_PRI_5	PBX_BIDI	DUMMY_REF02_PRI_5	11D2			
11	REF_PRI	PBX_BIDI	REF_PRI	11D1			
11	REF_PRI_N	PBX_BIDI	REF_PRI_N	11C3>	12C2<		
11	REF_SEC	PBX_BIDI	REF_SEC	14D4>	11C6<	12C6<	
11	VRS_DC_N	PBX_BIDI	VRS_DC_N	11B2			
11	VRS_N	PBX_BIDI	VRS_N	9A6>	10B1<	11C2<	
11	VRS_OUT_DC_N	PBX_BIDI	VRS_OUT_DC_N	11B6			
11	VRS_OUT_N	PBX_BIDI	VRS_OUT_N	11B8>	2C2<		
12	REF_PRI_N	PBX_BIDI	REF_PRI_N	11C3>	12C2<		
12	REF_SEC	PBX_BIDI	REF_SEC	14D4>	11C6<	12C6<	
12	VST_DC_N	PBX_BIDI	VST_DC_N	12B2			
12	VST_N	PBX_BIDI	VST_N	9B6>	12C2<		
12	VST_OUT_DC_N	PBX_BIDI	VST_OUT_DC_N	12B6			
12	VST_OUT_N	PBX_BIDI	VST_OUT_N	12B8>	2C2<		
13	DCN_U_ME	PBX_BIDI	DCN_U_ME	4C2>	13C2<		
13	DCN_U_ME_1	PBX_BIDI	DCN_U_ME_1	13C1			
13	DCP_U_ME	PBX_BIDI	DCP_U_ME	4A2>	13A2<		
13	DCP_U_ME_1	PBX_BIDI	DCP_U_ME_1	13B1			
13	DC_ME	PBX_BIDI	DC_ME	13B3			
13	UDCL	PBX_BIDI	UDCL	13C7>	3C2<		
13	V+15V	PBX_BIDI	V+15V	13B5	13C5		
13	V+15V	PBX_BIDI	V+15V	13B5	13C5		
14	5V_REF	PBX_BIDI	5V_REF	14D2			
14	DUMMY_REF02_SEC_3	PBX_BIDI	DUMMY_REF02_SEC_3	14D1			
14	DUMMY_REF02_SEC_5	PBX_BIDI	DUMMY_REF02_SEC_5	14D1			
14	NTC1	PBX_BIDI	NTC1	4C5>	14B1<		
14	NTC2	PBX_BIDI	NTC2	4C5>	14B1<		
14	NTC_DS	PBX_BIDI	NTC_DS	14C3			
14	REF_SEC	PBX_BIDI	REF_SEC	14D4>	11C6<	12C6<	
14	TEMP_IGBT	PBX_BIDI	TEMP_IGBT	14C6			
14	TEMP_IGBT_CONV	PBX_BIDI	TEMP_IGBT_CONV	14C8>	2D2<		
14	TEMP_IGBT_INV	PBX_BIDI	TEMP_IGBT_INV	14C8>	3C2<		
14	TEMP_UN	PBX_BIDI	TEMP_UN	14D5			

Changes

WARNING
THIS WORK AND THE INFORMATION IT CONTAINS ARE THE PROPERTY OF OTIS ELEVATOR COMPANY (OTIS). IT IS DELIVERED TO OTHERS ON THE EXPRESS CONDITION THAT IT WILL BE USED ONLY FOR OR ON BEHALF OF OTIS ; THAT NEITHER IT OR NOR THE INFORMATION IT CONTAINS WILL BE REPRODUCED OR DISCLOSED, IN WHOLE OR IN PART, WITHOUT THE PRIOR WRITTEN CONSENT OF OTIS ; AND THAT ON DEMAND IT AND ANY COPIES WILL BE PROMPTLY RETURNED TO OTIS.

UNPUBLISHED WORK (C) OTIS ELEVATOR COMPANY
ALL RIGHTS RESERVED.

Otis
A United Technologies Company

CIRCUIT DIAGRAM FOR

PBX_BIDI

CAD GENERATED
CADENCE-CONCEPT

DWG G2A26800MX

OTIS ENGINEERING CENTER
BERLIN, GERMANY

DRAWN	A. Tutat	ORIGINAL DATE
CHK	M. Dehmlow	2009-12-08
APPD	M. Dehmlow	SHEETS
AUTH	CA47A-000528	SHEET 18

Title: Cref Part Report
Design: pbx_bidi
Date: Dec 10 9:31:03 2009

+15V	MP_THT	pbx_bidi[	2D3]
-15V	MP_THT	pbx_bidi[	2D3]
5V_HL2	MP_THT	pbx_bidi[	3B8]
24V_HL2	MP_THT	pbx_bidi[	3A4]
24V_SENSE	MP_THT	pbx_bidi[	3A3]
24V_SENSE_RTN	MP_THT	pbx_bidi[	3A3]
AGND	MP_THT	pbx_bidi[	2D1]
A_GND	MP_THT	pbx_bidi[	2D1]
C1	C_0603	pbx_bidi[	3B8]
C2	C_0603	pbx_bidi[	3C8]
C3	C_1210	pbx_bidi[	3C8]
C4	C_1210	pbx_bidi[	3B5]
C5	C_1210	pbx_bidi[	3B5]
C6	C_0603	pbx_bidi[	3B5]
C7	C_1210	pbx_bidi[	3B5]
C8	C_1210	pbx_bidi[	3B5]
C9	C_0603	pbx_bidi[	3B5]
C10	C_0603	pbx_bidi[	3C6]
C11	C_1210	pbx_bidi[	3C5]
C12	C_1210	pbx_bidi[	3C6]
C13	C_0603	pbx_bidi[	3C6]
C14	C_1210	pbx_bidi[	3D7]
C15	C_0603	pbx_bidi[	3D6]
C16	C_0805	pbx_bidi[	3C6]
C17	C_1210	pbx_bidi[	2C8]
C18	C_0603	pbx_bidi[	2C8]
C19	C_0603	pbx_bidi[	2C8]
C20	C_1210	pbx_bidi[	2C8]
C21	CAP_THT	pbx_bidi[	8C2]
C22	C_1210	pbx_bidi[	8C2]
C23	C_0805	pbx_bidi[	2B2]
C24	C_0603	pbx_bidi[	3D7]
C25	C_0603	pbx_bidi[	3D5]
C26	C_1210	pbx_bidi[	3D5]
C27	C_0603	pbx_bidi[	3C5]
C28	C_0603	pbx_bidi[	3D5]
C29	C_1210	pbx_bidi[	3D5]
C30	C_1210	pbx_bidi[	3D5]
C31	C_0603	pbx_bidi[	5D1]
C32	C_0805	pbx_bidi[	2B2]
C33	C_0805	pbx_bidi[	2B2]
C34	C_0603	pbx_bidi[	5B1]
C35	C_0603	pbx_bidi[	5D2]
C36	C_1210	pbx_bidi[	5D2]
C37	C_0603	pbx_bidi[	5A3]
C38	C_1210	pbx_bidi[	5A3]
C39	C_1210	pbx_bidi[	5A3]
C40	C_0603	pbx_bidi[	5A2]
C41	C_0603	pbx_bidi[	5A2]
C42	C_0603	pbx_bidi[	5A4]
C43	C_1210	pbx_bidi[	5A4]
C44	C_1210	pbx_bidi[	5A4]
C45	C_1210	pbx_bidi[	5A4]
C46	C_0603	pbx_bidi[	5C2]
C47	C_0603	pbx_bidi[	5A2]
C48	C_0603	pbx_bidi[	5A1]
C49	C_1210	pbx_bidi[	5B2]
C50	C_0603	pbx_bidi[	5A1]
C51	C_0805	pbx_bidi[	13C5]
C52	C_0603	pbx_bidi[	13C4]
C53	C_0603	pbx_bidi[	13D4]
C54	C_0603	pbx_bidi[	5B4]
C55	C_1210	pbx_bidi[	5C4]
C56	C_1210	pbx_bidi[	5C4]
C57	C_0603	pbx_bidi[	5C4]
C58	C_0603	pbx_bidi[	5D3]
C59	C_1210	pbx_bidi[	5D3]
C60	C_0603	pbx_bidi[	5B4]
C61	C_0805	pbx_bidi[	13D7]
C62	C_0603	pbx_bidi[	5D4]
C63	C_1210	pbx_bidi[	5D4]
C64	C_1210	pbx_bidi[	5D4]
C65	C_0603	pbx_bidi[	5D4]
C66	C_0603	pbx_bidi[	5C5]
C67	C_0603	pbx_bidi[	5D4]
C68	C_0805	pbx_bidi[	5A6]
C69	C_0805	pbx_bidi[	5A6]
C70	C_0603	pbx_bidi[	14D7]
C71	C_0603	pbx_bidi[	5D5]
C72	CAP_THT	pbx_bidi[	5A7]
C73	C_0603	pbx_bidi[	5A7]
C74	C_1210	pbx_bidi[	5A6]
C75	C_1210	pbx_bidi[	5A7]
C76	C_1210	pbx_bidi[	5A7]
C77	C_1210	pbx_bidi[	5A7]
C78	CAP_THT	pbx_bidi[	5A7]
C79	C_0603	pbx_bidi[	5A7]
C80	C_1210	pbx_bidi[	5A6]
C81	C_1210	pbx_bidi[	5A7]
C82	C_1210	pbx_bidi[	5A7]
C83	C_1210	pbx_bidi[	5A7]
C84	C_0603	pbx_bidi[	4C1]
C85	C_1210	pbx_bidi[	4C1]
C86	C_1210	pbx_bidi[	4C1]
C87	C_0603	pbx_bidi[	14B7]
C88	C_0603	pbx_bidi[	14B7]
C89	C_0603	pbx_bidi[	14A1]
C90	C_0603	pbx_bidi[	14A1]
C91	C_0603	pbx_bidi[	4D1]
C92	C_1210	pbx_bidi[	4D1]
C93	C_1210	pbx_bidi[	4D1]
C94	C_0603	pbx_bidi[	14D5]
C95	C_0603	pbx_bidi[	14B3]
C96	C_THT	pbx_bidi[	4B1]

Changes

WARNING
THIS WORK AND THE INFORMATION IT CONTAINS ARE THE PROPERTY OF OTIS ELEVATOR COMPANY (OTIS). IT IS DELIVERED TO OTHERS ON THE EXPRESS CONDITION THAT IT WILL BE USED ONLY FOR OR ON BEHALF OF OTIS ; THAT NEITHER IT OR NOR THE INFORMATION IT CONTAINS WILL BE REPRODUCED OR DISCLOSED, IN WHOLE OR IN PART, WITHOUT THE PRIOR WRITTEN CONSENT OF OTIS ; AND THAT ON DEMAND IT AND ANY COPIES WILL BE PROMPTLY RETURNED TO OTIS.

UNPUBLISHED WORK (C) OTIS ELEVATOR COMPANY
ALL RIGHTS RESERVED.

Otis
A United Technologies Company

CIRCUIT DIAGRAM FOR

PBX_BIDI

CAD GENERATED
CADENCE-CONCEPT

DWG G2A26800MX

OTIS ENGINEERING CENTER
BERLIN, GERMANY

DRAWN	A. Tutat	ORIGINAL DATE
CHK	M. Dehmlow	2009-12-08
APPD	M. Dehmlow	SHEETS
AUTH	CA47A-000528	SHEET 19

OECB_A3
REV 2004-09-06

C97	C_THT	pbx_bidi[4B1]
C98	C_1210	pbx_bidi[14C3]
C99	C_1210	pbx_bidi[14D1]
C100	C_0603	pbx_bidi[12A2]
C101	C_0603	pbx_bidi[12A2]
C102	C_0603	pbx_bidi[6D1]
C103	C_0603	pbx_bidi[12B3]
C104	C_0603	pbx_bidi[6B1]
C105	C_0805	pbx_bidi[12C7]
C106	C_0603	pbx_bidi[6D2]
C107	C_1210	pbx_bidi[6D2]
C108	C_0603	pbx_bidi[6A3]
C109	C_1210	pbx_bidi[6A3]
C110	C_1210	pbx_bidi[6A3]
C111	C_0603	pbx_bidi[6A2]
C112	C_0603	pbx_bidi[6A2]
C113	C_0603	pbx_bidi[6A4]
C114	C_1210	pbx_bidi[6A4]
C115	C_1210	pbx_bidi[6A4]
C116	C_1210	pbx_bidi[6A4]
C117	C_0805	pbx_bidi[12C3]
C118	C_0603	pbx_bidi[6C2]
C119	C_0603	pbx_bidi[6A2]
C120	C_0603	pbx_bidi[6A1]
C121	C_0603	pbx_bidi[11A8]
C122	C_0603	pbx_bidi[11B8]
C123	C_0603	pbx_bidi[11A2]
C124	C_0603	pbx_bidi[11A2]
C125	C_0805	pbx_bidi[12C6]
C126	C_0603	pbx_bidi[11B3]
C127	C_1210	pbx_bidi[6B2]
C128	C_0603	pbx_bidi[6A1]
C129	C_1210	pbx_bidi[11D1]
C130	C_0805	pbx_bidi[11C6]
C131	C_0805	pbx_bidi[11C2]
C132	C_0805	pbx_bidi[11C3]
C133	C_0603	pbx_bidi[6B4]
C134	C_1210	pbx_bidi[6C4]
C135	C_1210	pbx_bidi[6C4]
C136	C_0603	pbx_bidi[6C4]
C137	C_0603	pbx_bidi[6D3]
C138	C_1210	pbx_bidi[6D3]
C139	C_0603	pbx_bidi[6B4]
C140	C_0805	pbx_bidi[11C7]
C141	C_0603	pbx_bidi[6D4]
C142	C_1210	pbx_bidi[6D4]
C143	C_1210	pbx_bidi[6D4]
C144	C_0603	pbx_bidi[6D4]
C145	C_0603	pbx_bidi[6C5]
C146	C_0603	pbx_bidi[6D4]
C147	C_0805	pbx_bidi[6A6]
C148	C_0805	pbx_bidi[6A6]
C149	C_0603	pbx_bidi[10A5]
C150	C_0603	pbx_bidi[10B5]
C151	C_0805	pbx_bidi[10B2]

C152	C_0603	pbx_bidi[6D5]
C153	CAP_THT	pbx_bidi[6A7]
C154	C_0603	pbx_bidi[6A7]
C155	C_1210	pbx_bidi[6A6]
C156	C_1210	pbx_bidi[6A7]
C157	C_1210	pbx_bidi[6A7]
C158	C_1210	pbx_bidi[6A7]
C159	CAP_THT	pbx_bidi[6A7]
C160	C_0603	pbx_bidi[6A7]
C161	C_1210	pbx_bidi[6A6]
C162	C_1210	pbx_bidi[6A7]
C163	C_1210	pbx_bidi[6A7]
C164	C_1210	pbx_bidi[6A7]
C165	C_0805	pbx_bidi[10B4]
C166	C_0603	pbx_bidi[10B6]
C167	C_0805	pbx_bidi[10C2]
C168	C_THT	pbx_bidi[4B4]
C169	C_THT	pbx_bidi[4B4]
C170	C_1210	pbx_bidi[10C5]
C171	C_1210	pbx_bidi[4D2]
C172	C_0603	pbx_bidi[7D1]
C173	C_0603	pbx_bidi[7B1]
C174	C_0603	pbx_bidi[7D2]
C175	C_1210	pbx_bidi[7D2]
C176	C_1210	pbx_bidi[4C2]
C177	C_0603	pbx_bidi[7A3]
C178	C_1210	pbx_bidi[7A3]
C179	C_1210	pbx_bidi[7A3]
C180	C_0603	pbx_bidi[7A2]
C181	C_0603	pbx_bidi[7A2]
C182	C_0603	pbx_bidi[7A4]
C183	C_1210	pbx_bidi[7A4]
C184	C_1210	pbx_bidi[7A4]
C185	C_1210	pbx_bidi[7A4]
C186	C_0603	pbx_bidi[7C2]
C187	C_1210	pbx_bidi[10C4]
C188	CAP_TANTAL-C	pbx_bidi[10C4]
C189	C_0603	pbx_bidi[7A2]
C190	C_0603	pbx_bidi[7A1]
C191	C_1210	pbx_bidi[7B2]
C192	C_0603	pbx_bidi[7A1]
C193	C_0603	pbx_bidi[7B4]
C194	C_1210	pbx_bidi[7C4]
C195	C_1210	pbx_bidi[7C4]
C196	C_0603	pbx_bidi[7C4]
C197	C_0603	pbx_bidi[7D3]
C198	C_1210	pbx_bidi[7D3]
C199	C_0603	pbx_bidi[7B4]
C200	C_1210	pbx_bidi[8D2]
C201	CAP_THT	pbx_bidi[8D2]
C202	C_1210	pbx_bidi[8D3]
C203	C_0603	pbx_bidi[7D4]
C204	C_1210	pbx_bidi[7D4]
C205	C_1210	pbx_bidi[7D4]
C206	C_0603	pbx_bidi[7D4]

Changes

WARNING

THIS WORK AND THE INFORMATION IT CONTAINS ARE THE PROPERTY OF OTIS ELEVATOR COMPANY (OTIS). IT IS DELIVERED TO OTHERS ON THE EXPRESS CONDITION THAT IT WILL BE USED ONLY FOR OR ON BEHALF OF OTIS ; THAT NEITHER IT OR NOR THE INFORMATION IT CONTAINS WILL BE REPRODUCED OR DISCLOSED, IN WHOLE OR IN PART, WITHOUT THE PRIOR WRITTEN CONSENT OF OTIS ; AND THAT ON DEMAND IT AND ANY COPIES WILL BE PROMPTLY RETURNED TO OTIS.

UNPUBLISHED WORK (C) OTIS ELEVATOR COMPANY
ALL RIGHTS RESERVED.

Otis
A United Technologies Company

CIRCUIT DIAGRAM FOR

PBX_BIDI

CAD GENERATED
CADENCE-CONCEPT

DWG G2A26800MX

OTIS ENGINEERING CENTER
BERLIN, GERMANY

DRAWN	A. Tutat	ORIGINAL DATE
CHK	M. Dehmlow	2009-12-08
APPD	M. Dehmlow	SHEETS
AUTH	CA47A-000528	SHEET 20

C207	C_0603	pbx_bidi[	7C5]
C208	C_0603	pbx_bidi[	7D4]
C209	C_0805	pbx_bidi[	8C7]
C210	C_0805	pbx_bidi[	8C6]
C211	C_1210	pbx_bidi[	8D7]
C212	C_0805	pbx_bidi[	8D7]
C213	C_0805	pbx_bidi[	7A6]
C214	C_0805	pbx_bidi[	7A6]
C215	C_0805	pbx_bidi[	8B7]
C216	C_0603	pbx_bidi[	7D5]
C217	C_1210	pbx_bidi[	8B7]
C218	CAP_THT	pbx_bidi[	8B7]
C219	CAP_THT	pbx_bidi[	7A7]
C220	C_0603	pbx_bidi[	7A7]
C221	C_1210	pbx_bidi[	7A6]
C222	C_1210	pbx_bidi[	7A7]
C223	C_1210	pbx_bidi[	7A7]
C224	C_1210	pbx_bidi[	7A7]
C225	CAP_THT	pbx_bidi[	7A7]
C226	C_0603	pbx_bidi[	7A7]
C227	C_1210	pbx_bidi[	7A6]
C228	C_1210	pbx_bidi[	7A7]
C229	C_1210	pbx_bidi[	7A7]
C230	C_1210	pbx_bidi[	7A7]
C231	C_1210	pbx_bidi[	8D5]
C232	C_1210	pbx_bidi[	8D5]
C233	C_1210	pbx_bidi[	8B7]
C234	CAP_THT	pbx_bidi[	8B8]
C235	C_0805	pbx_bidi[	8C7]
C236	C_THT	pbx_bidi[	4B7]
C237	C_THT	pbx_bidi[	4B6]
C238	C_0805	pbx_bidi[	3D1]
C239	C_0805	pbx_bidi[	9A8]
C240	C_0805	pbx_bidi[	9A8]
C241	C_1210	pbx_bidi[	8A2]
C242	C_1210	pbx_bidi[	8A2]
C243	C_0805	pbx_bidi[	8A2]
C244	C_0805	pbx_bidi[	3D1]
C245	C_1210	pbx_bidi[	3A8]
C246	C_0603	pbx_bidi[	3A8]
C247	C_0603	pbx_bidi[	3A8]
C248	C_1210	pbx_bidi[	3A8]
C249	CAP_THT	pbx_bidi[	8A2]
C250	C_1210	pbx_bidi[	9D3]
C251	C_1210	pbx_bidi[	9D4]
C252	C_1210	pbx_bidi[	9D5]
C253	C_1210	pbx_bidi[	9D5]
C254	C_0603	pbx_bidi[	3B5]
C255	C_0603	pbx_bidi[	3B5]
C256	C_0805	pbx_bidi[	8C1]
C257	C_0805	pbx_bidi[	3B7]
C258	C_0603	pbx_bidi[	3C5]
C259	C_0603	pbx_bidi[	3D6]
C260	C_0805	pbx_bidi[	13B2]
C261	C_0805	pbx_bidi[	13D5]
C262	C_0603	pbx_bidi[	5C3]
C263	C_0805	pbx_bidi[	13B3]
C264	C_0603	pbx_bidi[	13B4]
C265	C_0805	pbx_bidi[	13D6]
C266	C_0805	pbx_bidi[	13C2]
C267	C_0603	pbx_bidi[	5B6]
C268	C_0603	pbx_bidi[	5B7]
C269	C_0603	pbx_bidi[	5B7]
C270	C_0603	pbx_bidi[	5D6]
C271	C_0603	pbx_bidi[	5D7]
C272	C_0603	pbx_bidi[	5D7]
C273	C_0603	pbx_bidi[	14D6]
C274	C_0603	pbx_bidi[	14C5]
C275	C_0805	pbx_bidi[	14D3]
C276	C_0603	pbx_bidi[	5B7]
C277	C_0603	pbx_bidi[	5B6]
C278	C_0603	pbx_bidi[	14C2]
C279	C_0603	pbx_bidi[	14D1]
C280	C_0805	pbx_bidi[	12C5]
C281	C_0603	pbx_bidi[	6C3]
C282	C_0603	pbx_bidi[	11D2]
C283	C_0805	pbx_bidi[	11C5]
C284	C_0603	pbx_bidi[	6B6]
C285	C_0603	pbx_bidi[	6B7]
C286	C_0603	pbx_bidi[	6B7]
C287	C_0603	pbx_bidi[	6D6]
C288	C_0603	pbx_bidi[	6D7]
C289	C_0603	pbx_bidi[	6D7]
C290	C_0603	pbx_bidi[	10C1]
C291	C_0805	pbx_bidi[	10C1]
C292	C_0603	pbx_bidi[	6B7]
C293	C_0603	pbx_bidi[	6B6]
C294	C_0603	pbx_bidi[	10C5]
C295	C_0603	pbx_bidi[	10C4]
C296	C_0603	pbx_bidi[	10C5]
C297	C_0603	pbx_bidi[	7C3]
C298	C_0603	pbx_bidi[	7B6]
C299	C_0603	pbx_bidi[	7B7]
C300	C_0603	pbx_bidi[	7B7]
C301	C_0805	pbx_bidi[	8D3]
C302	C_0805	pbx_bidi[	8D2]
C303	C_0603	pbx_bidi[	7D6]
C304	C_0805	pbx_bidi[	8C7]
C305	C_0805	pbx_bidi[	8D3]
C306	C_0805	pbx_bidi[	8D4]
C307	C_0805	pbx_bidi[	8D4]
C308	C_0603	pbx_bidi[	7D7]
C309	C_0805	pbx_bidi[	8D4]
C310	C_0603	pbx_bidi[	7D7]
C311	C_0805	pbx_bidi[	8B8]
C312	C_0603	pbx_bidi[	8D5]
C313	C_0805	pbx_bidi[	8B8]
C314	C_0603	pbx_bidi[	7B7]
C315	C_0603	pbx_bidi[	7B6]
C316	C_0805	pbx_bidi[	2B7]

Changes

WARNING

THIS WORK AND THE INFORMATION IT CONTAINS ARE THE PROPERTY OF OTIS ELEVATOR COMPANY (OTIS). IT IS DELIVERED TO OTHERS ON THE EXPRESS CONDITION THAT IT WILL BE USED ONLY FOR OR ON BEHALF OF OTIS ; THAT NEITHER IT OR NOR THE INFORMATION IT CONTAINS WILL BE REPRODUCED OR DISCLOSED, IN WHOLE OR IN PART, WITHOUT THE PRIOR WRITTEN CONSENT OF OTIS ; AND THAT ON DEMAND IT AND ANY COPIES WILL BE PROMPTLY RETURNED TO OTIS.

UNPUBLISHED WORK (C) OTIS ELEVATOR COMPANY
ALL RIGHTS RESERVED.

Otis
A United Technologies Company

CIRCUIT DIAGRAM FOR

PBX_BIDI

CAD GENERATED
CADENCE-CONCEPT

DWG G2A26800MX

OTIS ENGINEERING CENTER
BERLIN, GERMANY

DRAWN	A. Tutat	ORIGINAL DATE
CHK	M. Dehmlow	2009-12-08
APPD	M. Dehmlow	SHEETS
AUTH	CA47A-000528	SHEET 21

C317	C_0805	pbx_bidi[	9B3]
C318	C_0805	pbx_bidi[	9B3]
C319	C_0805	pbx_bidi[	9A3]
C320	C_0805	pbx_bidi[	9D3]
CS1	LA200P_THT	pbx_bidi[	4C3]
CS2	LA200P_THT	pbx_bidi[	4D3]
CS3	LA200P_THT	pbx_bidi[	4D3]
D1	BAT54S_SMD	pbx_bidi[	3D6]
D2	BAT54S_SMD	pbx_bidi[	3D7]
D3	BAT54S_SMD	pbx_bidi[	3D6]
D4	BAT54S_SMD	pbx_bidi[	3D4]
D5	LCDA12_SOIC	pbx_bidi[	3D4 3D4]
D6	10MQ040N_SMD	pbx_bidi[	5A4]
D7	BAS19_SMD	pbx_bidi[	5A2]
D8	BAT54S_SMD	pbx_bidi[	13B3]
D9	LCDA12_SOIC	pbx_bidi[	13C2 13B2]
D10	RGP02_20E_THT	pbx_bidi[	5B5]
D11	US1G_SMD	pbx_bidi[	5B5]
D12	US1G_SMD	pbx_bidi[	5D5]
D13	BAS19_SMD	pbx_bidi[	5A6]
D14	BAS19_SMD	pbx_bidi[	5A6]
D15	RGP02_20E_THT	pbx_bidi[	5D5]
D16	BAV99_SMD	pbx_bidi[	5A6]
D17	BAV99_SMD	pbx_bidi[	5A7]
D18	10MQ040N_SMD	pbx_bidi[	6A4]
D19	BAS19_SMD	pbx_bidi[	6A2]
D20	RGP02_20E_THT	pbx_bidi[	6B5]
D21	US1G_SMD	pbx_bidi[	6B5]
D22	US1G_SMD	pbx_bidi[	6D5]
D23	BAS19_SMD	pbx_bidi[	6A6]
D24	BAS19_SMD	pbx_bidi[	6A6]
D25	BAT54S_SMD	pbx_bidi[	10B3]
D26	RGP02_20E_THT	pbx_bidi[	6D5]
D27	BAT54S_SMD	pbx_bidi[	10A3]
D28	BAV99_SMD	pbx_bidi[	6A6]
D29	BAV99_SMD	pbx_bidi[	6A7]
D30	BAS16_SMD	pbx_bidi[	10C3]
D31	BAS16_SMD	pbx_bidi[	10C3]
D32	10MQ040N_SMD	pbx_bidi[	7A4]
D33	BAS19_SMD	pbx_bidi[	7A2]
D34	RGP02_20E_THT	pbx_bidi[	7B5]
D35	US1G_SMD	pbx_bidi[	7B5]
D36	US1G_SMD	pbx_bidi[	7D5]
D37	BAS19_SMD	pbx_bidi[	7A6]
D38	BAS19_SMD	pbx_bidi[	7A6]
D39	RGP02_20E_THT	pbx_bidi[	7D5]
D40	BYG22D_SMD	pbx_bidi[	8B7]
D41	BYG22D_SMD	pbx_bidi[	8B7]
D42	10MQ040N_SMD	pbx_bidi[	8C5]
D43	BAV99_SMD	pbx_bidi[	7A6]
D44	BAV99_SMD	pbx_bidi[	7A7]
D45	LCDA12_SOIC	pbx_bidi[	9B2 9B2]
D46	LCDA12_SOIC	pbx_bidi[	9B2 9B2]
D47	LCDA12_SOIC	pbx_bidi[	9B2 9B2]
D48	TMMBAT42_MELF	pbx_bidi[	5B4]
D49	US1G_SMD	pbx_bidi[	5B6]
D50	US1G_SMD	pbx_bidi[	5C6]
D51	US1G_SMD	pbx_bidi[	5C6]
D52	TMMBAT42_MELF	pbx_bidi[	5D4]
D53	US1G_SMD	pbx_bidi[	5D6]
D54	US1G_SMD	pbx_bidi[	5D6]
D55	US1G_SMD	pbx_bidi[	5D6]
D56	TMMBAT42_MELF	pbx_bidi[	6B4]
D57	US1G_SMD	pbx_bidi[	6B6]
D58	US1G_SMD	pbx_bidi[	6C6]
D59	US1G_SMD	pbx_bidi[	6C6]
D60	TMMBAT42_MELF	pbx_bidi[	6D4]
D61	US1G_SMD	pbx_bidi[	6D6]
D62	US1G_SMD	pbx_bidi[	6D6]
D63	US1G_SMD	pbx_bidi[	6D6]
D64	TMMBAT42_MELF	pbx_bidi[	7B4]
D65	US1G_SMD	pbx_bidi[	7B6]
D66	US1G_SMD	pbx_bidi[	7C6]
D67	US1G_SMD	pbx_bidi[	7C6]
D68	TMMBAT42_MELF	pbx_bidi[	7D4]
D69	BYG22D_SMD	pbx_bidi[	8D7]
D70	US1G_SMD	pbx_bidi[	7D6]
D71	US1G_SMD	pbx_bidi[	7D6]
D72	US1G_SMD	pbx_bidi[	7D6]
D73	BYG22D	pbx_bidi[	8B5]
D74	BYG22D_SMD	pbx_bidi[	8B6]
D75	BYG22D_SMD	pbx_bidi[	8B5]
D76	10MQ040N_SMD	pbx_bidi[	8A2]
D77	D1F60_SMD	pbx_bidi[	9C5]
D78	D1F60_SMD	pbx_bidi[	2A8]
DCN_ME_1	MP_THT	pbx_bidi[	13C2]
DCP_ME_1	MP_THT	pbx_bidi[	13B2]
DC_ME	MP_THT	pbx_bidi[	13B3]
DC_VRS	MP_THT	pbx_bidi[	11C3]
DC_VST	MP_THT	pbx_bidi[	12C3]
DGND	MP_THT	pbx_bidi[	2D1]
HL2	MP_THT	pbx_bidi[	3A4]
IR	MP_THT	pbx_bidi[	4C3]
IRU	MP_THT	pbx_bidi[	4D3]
IS	MP_THT	pbx_bidi[	4D3]
ISV	MP_THT	pbx_bidi[	4D3]
IU	MP_THT	pbx_bidi[	4C3]
IV	MP_THT	pbx_bidi[	4D3]
IW	MP_THT	pbx_bidi[	4D3]
I_W	MP_THT	pbx_bidi[	4D3]
JP1	JUMPER_0805	pbx_bidi[	2B3]
JP2	JUMPER_0805	pbx_bidi[	2B3]
JP3	JUMPER_0603	pbx_bidi[	5C3]
JP4	JUMPER_0603	pbx_bidi[	5C3]
JP5	JUMPER_0603	pbx_bidi[	14C7]
JP6	JUMPER_0603	pbx_bidi[	14C7]
JP7	JUMPER_0603	pbx_bidi[	5B8]
JP8	JUMPER_0603	pbx_bidi[	5B8]
JP9	JUMPER_0603	pbx_bidi[	6C3]
JP10	JUMPER_0603	pbx_bidi[	6C3]

Changes

WARNING
THIS WORK AND THE INFORMATION IT CONTAINS ARE THE PROPERTY OF OTIS ELEVATOR COMPANY (OTIS). IT IS DELIVERED TO OTHERS ON THE EXPRESS CONDITION THAT IT WILL BE USED ONLY FOR OR ON BEHALF OF OTIS ; THAT NEITHER IT OR NOR THE INFORMATION IT CONTAINS WILL BE REPRODUCED OR DISCLOSED, IN WHOLE OR IN PART, WITHOUT THE PRIOR WRITTEN CONSENT OF OTIS ; AND THAT ON DEMAND IT AND ANY COPIES WILL BE PROMPTLY RETURNED TO OTIS.

UNPUBLISHED WORK (C) OTIS ELEVATOR COMPANY
ALL RIGHTS RESERVED.

Otis
A United Technologies Company

CIRCUIT DIAGRAM FOR

PBX_BIDI

CAD GENERATED
CADENCE-CONCEPT

DWG G2A26800MX

OTIS ENGINEERING CENTER
BERLIN, GERMANY

DRAWN	A. Tutat	ORIGINAL DATE
CHK	M. Dehmlow	2009-12-08
APPD	M. Dehmlow	SHEETS
AUTH	CA47A-000528	SHEET 22

JP11	JUMPER_0603	pbx_bidi[	6B8]
JP12	JUMPER_0603	pbx_bidi[	6B8]
JP13	JUMPER_0603	pbx_bidi[	7C3]
JP14	JUMPER_0603	pbx_bidi[	7C3]
JP15	JUMPER_0603	pbx_bidi[	7B8]
JP16	JUMPER_0603	pbx_bidi[	7B8]
JP17	JUMPER_0603	pbx_bidi[	4D3]
JP18	JUMPER_0603	pbx_bidi[	4D3]
JP19	JUMPER_0603	pbx_bidi[	4D3]
JP20	JUMPER_0603	pbx_bidi[	4D3]
JP21	JUMPER_0603	pbx_bidi[	4D3]
L1	L_WE_TPC	pbx_bidi[	3B7]
L2	L_SMD	pbx_bidi[	5A2]
L3	L_SMD	pbx_bidi[	6A2]
L4	L_SMD	pbx_bidi[	7A2]
LED1	LED_RED_SMD	pbx_bidi[	9D5]
NP1	NP_03_THT	pbx_bidi[	4C1]
NP2	NP_03_THT	pbx_bidi[	4A1]
NP3	NP_02_THT	pbx_bidi[	4B3]
NP4	NP_02_THT	pbx_bidi[	4B6]
NP5	NP_02_THT	pbx_bidi[	4A6]
NP6	NP_02_THT	pbx_bidi[	4C6]
NTC1	MP_THT	pbx_bidi[	14B1]
NTC2	MP_THT	pbx_bidi[	14B1]
NTC_DS	MP_THT	pbx_bidi[	14C3]
P1	CON2_WAGO_VP5MM	pbx_bidi[	8C1]
P2	CON5_WAGO721_265	pbx_bidi[	2C5]
P3	CON40_PCB_HEADER	pbx_bidi[	2C1]
P4	CON2_WAGO721_262	pbx_bidi[	8A1]
P5	CON50_PCB_HEADER-LONG-PIN	pbx_bidi[	3B1]
P6	CON6_WAGO733_336	pbx_bidi[	3D3]
PTC_ADC	MP_THT	pbx_bidi[	3D6]
Q1	BC817_SMD	pbx_bidi[	2C7]
Q2	BC817_SMD	pbx_bidi[	2B6]
Q3	BC847C_SMD	pbx_bidi[	5B2]
Q4	BC817	pbx_bidi[	13B4]
Q5	MJD45H11_SMD	pbx_bidi[	5B5]
Q6	MJD44H11_SMD	pbx_bidi[	5B5]
Q7	MJD45H11_SMD	pbx_bidi[	5D5]
Q8	MJD44H11_SMD	pbx_bidi[	5D5]
Q9	BC817	pbx_bidi[	14B4]
Q10	BC817	pbx_bidi[	12A4]
Q11	BC847C_SMD	pbx_bidi[	6B2]
Q12	BC817	pbx_bidi[	11A4]
Q13	MJD45H11_SMD	pbx_bidi[	6B5]
Q14	MJD44H11_SMD	pbx_bidi[	6B5]
Q15	MJD45H11_SMD	pbx_bidi[	6D5]
Q16	MJD44H11_SMD	pbx_bidi[	6D5]
Q17	IRFR9120_SMD	pbx_bidi[	10C3]
Q18	BC847C_SMD	pbx_bidi[	7B2]
Q19	MJD45H11_SMD	pbx_bidi[	7B5]
Q20	MJD44H11_SMD	pbx_bidi[	7B5]
Q21	MJD45H11_SMD	pbx_bidi[	7D5]
Q22	MJD44H11_SMD	pbx_bidi[	7D5]
Q23	IRFS23N15D_D2PAK	pbx_bidi[	8C6]
Q24	BC817_SMD	pbx_bidi[	2A8]
Q25	BC817_SMD	pbx_bidi[	3A7]
Q26	ZXMN10A11G_SMD	pbx_bidi[	5A5]
Q27	SEMIX453GB12E4S_THT	pbx_bidi[	4B2]
Q28	BDP949_SMD	pbx_bidi[	5B7]
Q29	BDP949_SMD	pbx_bidi[	5B6]
Q30	ZXMN10A11G_SMD	pbx_bidi[	6A5]
Q31	SEMIX453GB12E4S_THT	pbx_bidi[	4B5]
Q32	BDP949_SMD	pbx_bidi[	6B7]
Q33	BDP949_SMD	pbx_bidi[	6B6]
Q34	ZXMN10A11G_SMD	pbx_bidi[	7A5]
Q35	SEMIX453GB12E4S_THT	pbx_bidi[	4B7]
Q36	BDP949_SMD	pbx_bidi[	7B7]
Q37	BDP949_SMD	pbx_bidi[	7B6]
R1	R_0805	pbx_bidi[	3B6]
R2	R_0805	pbx_bidi[	3B8]
R3	R_THT	pbx_bidi[	4A8]
R4	R_0805	pbx_bidi[	3C8]
R5	R_THT	pbx_bidi[	4A8]
R6	R_0603	pbx_bidi[	3B7]
R7	R_0805	pbx_bidi[	2A2]
R8	R_0805	pbx_bidi[	2A1]
R9	R_0603	pbx_bidi[	3D5]
R10	RP4_CAY0603	pbx_bidi[	2C7]
R11	RP4_CAY0603	pbx_bidi[	2C3]
R12	R_0805	pbx_bidi[	2C3]
R13	R_0603	pbx_bidi[	3D7]
R14	R_0805	pbx_bidi[	3D7]
R15	R_0805	pbx_bidi[	3D7]
R16	R_0603	pbx_bidi[	3D5]
R17	R_0603	pbx_bidi[	3D5]
R18	R_0603	pbx_bidi[	3D5]
R19	R_THT	pbx_bidi[	4A8]
R20	R_0603	pbx_bidi[	5D1]
R21	R_0603	pbx_bidi[	5D1]
R22	R_0603	pbx_bidi[	5D1]
R23	R_0805	pbx_bidi[	2A1]
R24	R_0603	pbx_bidi[	2B2]
R25	R_0805	pbx_bidi[	2A5]
R26	R_0805	pbx_bidi[	2B6]
R27	R_0805	pbx_bidi[	2B6]
R28	R_MINI-MELF	pbx_bidi[	2A6]
R29	R_MINI-MELF	pbx_bidi[	2A6]
R30	R_0805	pbx_bidi[	2C6]
R31	R_0603	pbx_bidi[	2B2]
R32	R_0805	pbx_bidi[	2A1]
R33	R_0603	pbx_bidi[	5B1]
R34	R_0603	pbx_bidi[	5B1]
R35	R_0603	pbx_bidi[	5B1]
R36	R_MELF	pbx_bidi[	5A4]
R37	R_0603	pbx_bidi[	5C1]
R38	R_0603	pbx_bidi[	5C1]
R39	R_0603	pbx_bidi[	5C1]
R40	R_0805	pbx_bidi[	5A2]

Changes

WARNING

THIS WORK AND THE INFORMATION IT CONTAINS ARE THE PROPERTY OF OTIS ELEVATOR COMPANY (OTIS). IT IS DELIVERED TO OTHERS ON THE EXPRESS CONDITION THAT IT WILL BE USED ONLY FOR OR ON BEHALF OF OTIS ; THAT NEITHER IT OR NOR THE INFORMATION IT CONTAINS WILL BE REPRODUCED OR DISCLOSED, IN WHOLE OR IN PART, WITHOUT THE PRIOR WRITTEN CONSENT OF OTIS ; AND THAT ON DEMAND IT AND ANY COPIES WILL BE PROMPTLY RETURNED TO OTIS.

UNPUBLISHED WORK (C) OTIS ELEVATOR COMPANY
ALL RIGHTS RESERVED.

Otis
A United Technologies Company

CIRCUIT DIAGRAM FOR

PBX_BIDI

CAD GENERATED
CADENCE-CONCEPT

DWG G2A26800MX

OTIS ENGINEERING CENTER
BERLIN, GERMANY

DRAWN	A. Tutat	ORIGINAL DATE
CHK	M. Dehmlow	2009-12-08
APPD	M. Dehmlow	SHEETS
AUTH	CA47A-000528	SHEET 23

R41	R_0805	pbx_bidi[	5A2]
R42	R_THT	pbx_bidi[	13B2]
R43	R_THT	pbx_bidi[	13B2]
R44	R_THT	pbx_bidi[	13B2]
R45	R_0805	pbx_bidi[	13C5]
R46	R_0805	pbx_bidi[	13D5]
R47	R_0805	pbx_bidi[	13C3]
R48	R_0805	pbx_bidi[	13C5]
R49	R_0805	pbx_bidi[	13C3]
R50	R_THT	pbx_bidi[	13C2]
R51	R_0603	pbx_bidi[	5C2]
R52	R_0805	pbx_bidi[	5B2]
R53	R_THT	pbx_bidi[	13C2]
R54	R_THT	pbx_bidi[	13C2]
R55	R_0805	pbx_bidi[	5A5]
R56	R_MELF	pbx_bidi[	5C4]
R57	R_MINI-MELF	pbx_bidi[	5A5]
R58	R_MINI-MELF	pbx_bidi[	5A5]
R59	R_MINI-MELF	pbx_bidi[	13C7]
R60	R_MINI-MELF	pbx_bidi[	13B5]
R61	R_MINI-MELF	pbx_bidi[	13C4]
R62	R_MINI-MELF	pbx_bidi[	5B5]
R63	R_MELF	pbx_bidi[	5B5]
R64	R_MELF	pbx_bidi[	5B5]
R65	R_MELF	pbx_bidi[	5B5]
R66	R_MELF	pbx_bidi[	5B5]
R67	R_MELF	pbx_bidi[	5B5]
R68	R_MELF	pbx_bidi[	5D4]
R69	R_0603	pbx_bidi[	5B4]
R70	R_MELF	pbx_bidi[	5B5]
R71	R_MINI-MELF	pbx_bidi[	5D5]
R72	R_MINI-MELF	pbx_bidi[	5A6]
R73	R_MINI-MELF	pbx_bidi[	5A6]
R74	R_MINI-MELF	pbx_bidi[	14C7]
R75	R_MINI-MELF	pbx_bidi[	14A4]
R76	R_MINI-MELF	pbx_bidi[	14B4]
R77	R_0603	pbx_bidi[	5D4]
R78	R_MELF	pbx_bidi[	5D5]
R79	R_0805	pbx_bidi[	14D6]
R80	R_0805	pbx_bidi[	14C5]
R81	R_0603	pbx_bidi[	14C3]
R82	R_0805	pbx_bidi[	14B3]
R83	R_0805	pbx_bidi[	14C5]
R84	R_0603	pbx_bidi[	14C2]
R85	R_MINI-MELF	pbx_bidi[	5A6]
R86	R_MINI-MELF	pbx_bidi[	5A7]
R87	R_0805	pbx_bidi[	14B2]
R88	R_0805	pbx_bidi[	14D2]
R89	R_0603	pbx_bidi[	6D1]
R90	R_0603	pbx_bidi[	6D1]
R91	R_0603	pbx_bidi[	6D1]
R92	R_0805	pbx_bidi[	9B5]
R93	R_0603	pbx_bidi[	6B1]
R94	R_0603	pbx_bidi[	6B1]
R95	R_0603	pbx_bidi[	6B1]

R96	R_0805	pbx_bidi[	12C7]
R97	R_0805	pbx_bidi[	12C7]
R98	R_MINI-MELF	pbx_bidi[	12C7]
R99	R_MINI-MELF	pbx_bidi[	12A4]
R100	R_MINI-MELF	pbx_bidi[	12B4]
R101	R_0805	pbx_bidi[	12B3]
R102	R_MELF	pbx_bidi[	6A4]
R103	R_0603	pbx_bidi[	6C1]
R104	R_0603	pbx_bidi[	6C1]
R105	R_0603	pbx_bidi[	6C1]
R106	R_0805	pbx_bidi[	6A2]
R107	R_0805	pbx_bidi[	6A2]
R108	R_0805	pbx_bidi[	11C6]
R109	R_0805	pbx_bidi[	9B5]
R110	R_0805	pbx_bidi[	12C5]
R111	R_0603	pbx_bidi[	6C2]
R112	R_0805	pbx_bidi[	6B2]
R113	R_0805	pbx_bidi[	6A5]
R114	R_MELF	pbx_bidi[	6C4]
R115	R_MINI-MELF	pbx_bidi[	6A5]
R116	R_MINI-MELF	pbx_bidi[	6A5]
R117	R_0805	pbx_bidi[	11C7]
R118	R_0805	pbx_bidi[	11C7]
R119	R_MINI-MELF	pbx_bidi[	11C7]
R120	R_MINI-MELF	pbx_bidi[	11A4]
R121	R_MINI-MELF	pbx_bidi[	11B4]
R122	R_MINI-MELF	pbx_bidi[	6B5]
R123	R_MELF	pbx_bidi[	6B5]
R124	R_MELF	pbx_bidi[	6B5]
R125	R_MELF	pbx_bidi[	6B5]
R126	R_MELF	pbx_bidi[	6B5]
R127	R_MELF	pbx_bidi[	6B5]
R128	R_MELF	pbx_bidi[	6D4]
R129	R_0603	pbx_bidi[	6B4]
R130	R_MELF	pbx_bidi[	6B5]
R131	R_MINI-MELF	pbx_bidi[	6D5]
R132	R_MINI-MELF	pbx_bidi[	6A6]
R133	R_MINI-MELF	pbx_bidi[	6A6]
R134	R_0603	pbx_bidi[	6D4]
R135	R_MELF	pbx_bidi[	6D5]
R136	R_0805	pbx_bidi[	10C2]
R137	R_0805	pbx_bidi[	10A7]
R138	R_0805	pbx_bidi[	10C2]
R139	R_0805	pbx_bidi[	10C2]
R140	R_0805	pbx_bidi[	10B7]
R141	R_MINI-MELF	pbx_bidi[	6A6]
R142	R_MINI-MELF	pbx_bidi[	6A7]
R143	R_0805	pbx_bidi[	10C4]
R144	R_0603	pbx_bidi[	7D1]
R145	R_0603	pbx_bidi[	7D1]
R146	R_0603	pbx_bidi[	7D1]
R147	R_0603	pbx_bidi[	7B1]
R148	R_0603	pbx_bidi[	7B1]
R149	R_0603	pbx_bidi[	7B1]
R150	R_MELF	pbx_bidi[	7A4]

Changes

WARNING

THIS WORK AND THE INFORMATION IT CONTAINS ARE THE PROPERTY OF OTIS ELEVATOR COMPANY (OTIS). IT IS DELIVERED TO OTHERS ON THE EXPRESS CONDITION THAT IT WILL BE USED ONLY FOR OR ON BEHALF OF OTIS ; THAT NEITHER IT OR NOR THE INFORMATION IT CONTAINS WILL BE REPRODUCED OR DISCLOSED, IN WHOLE OR IN PART, WITHOUT THE PRIOR WRITTEN CONSENT OF OTIS ; AND THAT ON DEMAND IT AND ANY COPIES WILL BE PROMPTLY RETURNED TO OTIS.

UNPUBLISHED WORK (C) OTIS ELEVATOR COMPANY
ALL RIGHTS RESERVED.

Otis
A United Technologies Company

CIRCUIT DIAGRAM FOR

PBX_BIDI

CAD GENERATED
CADENCE-CONCEPT

DWG G2A26800MX

OTIS ENGINEERING CENTER
BERLIN, GERMANY

DRAWN	A. Tutat	ORIGINAL DATE
CHK	M. Dehmlow	2009-12-08
APPD	M. Dehmlow	SHEETS
AUTH	CA47A-000528	SHEET 24

R151	R_0603	pbx_bidi[	7C1]
R152	R_0603	pbx_bidi[	7C1]
R153	R_0603	pbx_bidi[	7C1]
R154	R_MINI-MELF	pbx_bidi[	10C4]
R155	R_0805	pbx_bidi[	7A2]
R156	R_0805	pbx_bidi[	7A2]
R157	R_0603	pbx_bidi[	7C2]
R158	R_0805	pbx_bidi[	7B2]
R159	R_0805	pbx_bidi[	7A5]
R160	R_MELF	pbx_bidi[	7C4]
R161	R_MINI-MELF	pbx_bidi[	7A5]
R162	R_MINI-MELF	pbx_bidi[	7A5]
R163	R_MINI-MELF	pbx_bidi[	7B5]
R164	R_MELF	pbx_bidi[	7B5]
R165	R_MELF	pbx_bidi[	7B5]
R166	R_MELF	pbx_bidi[	7B5]
R167	R_MELF	pbx_bidi[	7B5]
R168	R_MELF	pbx_bidi[	7B5]
R169	R_MELF	pbx_bidi[	7D4]
R170	R_0603	pbx_bidi[	7B4]
R171	R_MELF	pbx_bidi[	7B5]
R172	R_0805	pbx_bidi[	8D3]
R173	R_0805	pbx_bidi[	8D3]
R174	R_0805	pbx_bidi[	8C6]
R175	R_0805	pbx_bidi[	8C7]
R176	R_MINI-MELF	pbx_bidi[	7D5]
R177	R_MINI-MELF	pbx_bidi[	7A6]
R178	R_MINI-MELF	pbx_bidi[	7A6]
R179	R_0603	pbx_bidi[	7D4]
R180	R_MINI-MELF	pbx_bidi[	8B7]
R181	R_MELF	pbx_bidi[	7D5]
R182	R_MINI-MELF	pbx_bidi[	8C7]
R183	R_MINI-MELF	pbx_bidi[	8C5]
R184	R_MINI-MELF	pbx_bidi[	8C5]
R185	R_MINI-MELF	pbx_bidi[	7A6]
R186	R_MINI-MELF	pbx_bidi[	7A7]
R187	R_0603	pbx_bidi[	3D1]
R188	R_0805	pbx_bidi[	3C1]
R189	R_0805	pbx_bidi[	2A7]
R190	RP4_CAY0603	pbx_bidi[	3A7]
R191	R_MINI-MELF	pbx_bidi[	2D6]
R192	R_MINI-MELF	pbx_bidi[	2D6]
R193	R_MINI-MELF	pbx_bidi[	2D6]
R194	R_MINI-MELF	pbx_bidi[	9C5]
R195	R_0805	pbx_bidi[	3C3]
R196	R_0805	pbx_bidi[	3A6]
R197	R_0603	pbx_bidi[	3D1]
R198	R_0805	pbx_bidi[	3D1]
R199	R_THT	pbx_bidi[	9D4]
R200	R_THT	pbx_bidi[	9D4]
R201	R_THT	pbx_bidi[	9D3]
R202	R_THT	pbx_bidi[	9D5]
R203	R_THT	pbx_bidi[	9D4]
R204	R_THT	pbx_bidi[	9D4]
R205	R_0603	pbx_bidi[	3D6]
R206	R_0805	pbx_bidi[	3D7]
R207	R_0805	pbx_bidi[	3D7]
R208	R_0603	pbx_bidi[	3D7]
R209	R_0603	pbx_bidi[	3C5]
R210	R_0603	pbx_bidi[	3C8]
R211	R_0603	pbx_bidi[	3C8]
R212	R_0805	pbx_bidi[	3D5]
R213	R_0805	pbx_bidi[	3D5]
R214	R_0805	pbx_bidi[	3D5]
R215	R_0603	pbx_bidi[	3C6]
R216	R_MELF	pbx_bidi[	8B2]
R217	R_MELF	pbx_bidi[	8B2]
R218	R_MELF	pbx_bidi[	5A3]
R219	R_MELF	pbx_bidi[	5A3]
R220	R_MELF	pbx_bidi[	5A3]
R221	R_0805	pbx_bidi[	5A2]
R222	R_0603	pbx_bidi[	13B3]
R223	R_0805	pbx_bidi[	13C4]
R224	R_0603	pbx_bidi[	13C3]
R225	R_0805	pbx_bidi[	13C7]
R226	R_0805	pbx_bidi[	13C6]
R227	R_0805	pbx_bidi[	5B2]
R228	R_0805	pbx_bidi[	5A4]
R229	R_0805	pbx_bidi[	5A2]
R230	R_MINI-MELF	pbx_bidi[	5A5]
R231	R_0805	pbx_bidi[	13C2]
R232	R_0805	pbx_bidi[	13B2]
R233	R_0805	pbx_bidi[	13C4]
R234	R_0603	pbx_bidi[	13C3]
R235	R_0805	pbx_bidi[	13C5]
R236	R_0805	pbx_bidi[	13C6]
R237	R_0805	pbx_bidi[	13D6]
R238	R_0603	pbx_bidi[	5C2]
R239	R_0805	pbx_bidi[	13B4]
R240	R_0805	pbx_bidi[	13B4]
R241	R_0603	pbx_bidi[	13C3]
R242	R_0805	pbx_bidi[	13C3]
R243	R_0805	pbx_bidi[	13C5]
R244	R_0805	pbx_bidi[	13C5]
R245	R_MINI-MELF	pbx_bidi[	5B4]
R246	R_0805	pbx_bidi[	5B4]
R247	R_0805	pbx_bidi[	13B4]
R248	R_MINI-MELF	pbx_bidi[	13C4]
R249	R_MINI-MELF	pbx_bidi[	13B5]
R250	R_0805	pbx_bidi[	13B5]
R251	R_0603	pbx_bidi[	5B6]
R252	R_0603	pbx_bidi[	5B7]
R253	R_0603	pbx_bidi[	5B7]
R254	R_MELF	pbx_bidi[	5B6]
R255	R_MELF	pbx_bidi[	5C6]
R256	R_MELF	pbx_bidi[	5C6]
R257	R_MINI-MELF	pbx_bidi[	5D4]
R258	R_0805	pbx_bidi[	5D4]
R259	R_0603	pbx_bidi[	5D6]
R260	R_MELF	pbx_bidi[	5D6]

Changes

WARNING
THIS WORK AND THE INFORMATION IT CONTAINS ARE THE PROPERTY OF OTIS ELEVATOR COMPANY (OTIS). IT IS DELIVERED TO OTHERS ON THE EXPRESS CONDITION THAT IT WILL BE USED ONLY FOR OR ON BEHALF OF OTIS ; THAT NEITHER IT OR NOR THE INFORMATION IT CONTAINS WILL BE REPRODUCED OR DISCLOSED, IN WHOLE OR IN PART, WITHOUT THE PRIOR WRITTEN CONSENT OF OTIS ; AND THAT ON DEMAND IT AND ANY COPIES WILL BE PROMPTLY RETURNED TO OTIS.

UNPUBLISHED WORK (C) OTIS ELEVATOR COMPANY
ALL RIGHTS RESERVED.

Otis
A United Technologies Company

CIRCUIT DIAGRAM FOR

PBX_BIDI

CAD GENERATED
CADENCE-CONCEPT

DWG G2A26800MX

OTIS ENGINEERING CENTER
BERLIN, GERMANY

DRAWN	A. Tutat	ORIGINAL DATE
CHK	M. Dehmlow	2009-12-08
APPD	M. Dehmlow	SHEETS
AUTH	CA47A-000528	SHEET 25

R261	R_MELF	pbx_bidi[	5D6]
R262	R_MELF	pbx_bidi[	5D6]
R263	R_0603	pbx_bidi[	5D7]
R264	R_0603	pbx_bidi[	5D7]
R265	R_0805	pbx_bidi[	14B5]
R266	R_0805	pbx_bidi[	14A4]
R267	R_MINI-MELF	pbx_bidi[	14C4]
R268	R_MINI-MELF	pbx_bidi[	14A4]
R269	R_MELF	pbx_bidi[	5D5]
R270	R_MELF	pbx_bidi[	5D5]
R271	R_MELF	pbx_bidi[	5D5]
R272	R_MELF	pbx_bidi[	5D5]
R273	R_MELF	pbx_bidi[	5D5]
R274	R_0805	pbx_bidi[	14B5]
R275	R_0805	pbx_bidi[	14C5]
R276	R_0805	pbx_bidi[	14B4]
R277	R_MELF	pbx_bidi[	4D2]
R278	R_MELF	pbx_bidi[	4C2]
R279	R_0805	pbx_bidi[	14C3]
R280	R_0805	pbx_bidi[	14C5]
R281	R_0805	pbx_bidi[	14D6]
R282	R_0805	pbx_bidi[	14D6]
R283	R_0805	pbx_bidi[	14B4]
R284	R_0805	pbx_bidi[	14B2]
R285	R_0805	pbx_bidi[	14B2]
R286	R_0805	pbx_bidi[	14D3]
R287	R_0805	pbx_bidi[	14D3]
R288	R_0805	pbx_bidi[	5B7]
R289	R_0805	pbx_bidi[	5B7]
R290	R_0805	pbx_bidi[	5B6]
R291	R_0805	pbx_bidi[	5B6]
R292	R_0805	pbx_bidi[	14B2]
R293	R_0805	pbx_bidi[	14D2]
R294	R_0805	pbx_bidi[	14D5]
R295	R_0805	pbx_bidi[	14D5]
R296	R_0805	pbx_bidi[	9B4]
R297	R_0805	pbx_bidi[	12C2]
R298	R_0805	pbx_bidi[	9B4]
R299	R_0805	pbx_bidi[	9B4]
R300	R_0805	pbx_bidi[	12A3]
R301	R_0805	pbx_bidi[	12B5]
R302	R_0805	pbx_bidi[	12B5]
R303	R_0805	pbx_bidi[	12C7]
R304	R_MELF	pbx_bidi[	6A3]
R305	R_MELF	pbx_bidi[	6A3]
R306	R_MELF	pbx_bidi[	6A3]
R307	R_0805	pbx_bidi[	12A4]
R308	R_MINI-MELF	pbx_bidi[	12B4]
R309	R_MINI-MELF	pbx_bidi[	12A4]
R310	R_0805	pbx_bidi[	12C3]
R311	R_0805	pbx_bidi[	12C2]
R312	R_0805	pbx_bidi[	12B3]
R313	R_0805	pbx_bidi[	12B4]
R314	R_0805	pbx_bidi[	12B5]
R315	R_0805	pbx_bidi[	12B5]
R316	R_0805	pbx_bidi[	12C5]
R317	R_0805	pbx_bidi[	12C6]
R318	R_0805	pbx_bidi[	6A2]
R319	R_0805	pbx_bidi[	6B2]
R320	R_0805	pbx_bidi[	9A4]
R321	R_0805	pbx_bidi[	11C2]
R322	R_0805	pbx_bidi[	9B4]
R323	R_0805	pbx_bidi[	9B5]
R324	R_0805	pbx_bidi[	11C2]
R325	R_0805	pbx_bidi[	11C5]
R326	R_0805	pbx_bidi[	12C5]
R327	R_0805	pbx_bidi[	12B6]
R328	R_0805	pbx_bidi[	12C6]
R329	R_0805	pbx_bidi[	6A4]
R330	R_0805	pbx_bidi[	6A2]
R331	R_MINI-MELF	pbx_bidi[	6A5]
R332	R_0603	pbx_bidi[	6C2]
R333	R_0805	pbx_bidi[	11C3]
R334	R_0805	pbx_bidi[	11C2]
R335	R_0805	pbx_bidi[	11B3]
R336	R_0805	pbx_bidi[	11C2]
R337	R_0805	pbx_bidi[	11C6]
R338	R_0805	pbx_bidi[	11C5]
R339	R_0805	pbx_bidi[	11B6]
R340	R_0805	pbx_bidi[	12C6]
R341	R_MINI-MELF	pbx_bidi[	6B4]
R342	R_0805	pbx_bidi[	6B4]
R343	R_0805	pbx_bidi[	11A3]
R344	R_0805	pbx_bidi[	11B4]
R345	R_0805	pbx_bidi[	11B3]
R346	R_0805	pbx_bidi[	11B5]
R347	R_0805	pbx_bidi[	11B5]
R348	R_0805	pbx_bidi[	11C6]
R349	R_0805	pbx_bidi[	11A4]
R350	R_MINI-MELF	pbx_bidi[	11B4]
R351	R_MINI-MELF	pbx_bidi[	11A4]
R352	R_0603	pbx_bidi[	6B6]
R353	R_0603	pbx_bidi[	6B7]
R354	R_0603	pbx_bidi[	6B7]
R355	R_0805	pbx_bidi[	11B5]
R356	R_0805	pbx_bidi[	11B5]
R357	R_0805	pbx_bidi[	11C5]
R358	R_0805	pbx_bidi[	11C7]
R359	R_MELF	pbx_bidi[	6B6]
R360	R_MELF	pbx_bidi[	6C6]
R361	R_MELF	pbx_bidi[	6C6]
R362	R_MINI-MELF	pbx_bidi[	6D4]
R363	R_0805	pbx_bidi[	6D4]
R364	R_0603	pbx_bidi[	6D6]
R365	R_MELF	pbx_bidi[	6D6]
R366	R_MELF	pbx_bidi[	6D6]
R367	R_MELF	pbx_bidi[	6D6]
R368	R_0603	pbx_bidi[	6D7]
R369	R_0603	pbx_bidi[	6D7]
R370	R_MINI-MELF	pbx_bidi[	10B2]

Changes

WARNING

THIS WORK AND THE INFORMATION IT CONTAINS ARE THE PROPERTY OF OTIS ELEVATOR COMPANY (OTIS). IT IS DELIVERED TO OTHERS ON THE EXPRESS CONDITION THAT IT WILL BE USED ONLY FOR OR ON BEHALF OF OTIS ; THAT NEITHER IT OR NOR THE INFORMATION IT CONTAINS WILL BE REPRODUCED OR DISCLOSED, IN WHOLE OR IN PART, WITHOUT THE PRIOR WRITTEN CONSENT OF OTIS ; AND THAT ON DEMAND IT AND ANY COPIES WILL BE PROMPTLY RETURNED TO OTIS.

UNPUBLISHED WORK (C) OTIS ELEVATOR COMPANY
ALL RIGHTS RESERVED.

Otis
A United Technologies Company

CIRCUIT DIAGRAM FOR

PBX_BIDI

CAD GENERATED
CADENCE-CONCEPT

DWG G2A26800MX

OTIS ENGINEERING CENTER
BERLIN, GERMANY

DRAWN	A. Tutat	ORIGINAL DATE
CHK	M. Dehmlow	2009-12-08
APPD	M. Dehmlow	SHEETS
AUTH	CA47A-000528	SHEET 26

R371	R_0805	pbx_bidi[	10B2]
R372	R_0805	pbx_bidi[	10B2]
R373	R_MELF	pbx_bidi[	6D5]
R374	R_MELF	pbx_bidi[	6D5]
R375	R_MELF	pbx_bidi[	6D5]
R376	R_MELF	pbx_bidi[	6D5]
R377	R_MELF	pbx_bidi[	6D5]
R378	R_0805	pbx_bidi[	10A3]
R379	R_0805	pbx_bidi[	10A4]
R380	R_0805	pbx_bidi[	10B4]
R381	R_0805	pbx_bidi[	10A3]
R382	R_0805	pbx_bidi[	10C1]
R383	R_0805	pbx_bidi[	10C3]
R384	R_0805	pbx_bidi[	10C3]
R385	R_0805	pbx_bidi[	10B7]
R386	R_0805	pbx_bidi[	10A7]
R387	R_0805	pbx_bidi[	10C1]
R388	R_0805	pbx_bidi[	6B7]
R389	R_0805	pbx_bidi[	6B7]
R390	R_0805	pbx_bidi[	6B6]
R391	R_0805	pbx_bidi[	6B6]
R392	R_MELF	pbx_bidi[	4D2]
R393	R_0805	pbx_bidi[	10C3]
R394	R_MELF	pbx_bidi[	7A3]
R395	R_MELF	pbx_bidi[	7A3]
R396	R_MELF	pbx_bidi[	7A3]
R397	R_0805	pbx_bidi[	7A2]
R398	R_MINI-MELF	pbx_bidi[	10C6]
R399	R_MINI-MELF	pbx_bidi[	10C6]
R400	R_0805	pbx_bidi[	7B2]
R401	R_0805	pbx_bidi[	7A4]
R402	R_0805	pbx_bidi[	7A2]
R403	R_MINI-MELF	pbx_bidi[	7A5]
R404	R_0603	pbx_bidi[	7C2]
R405	R_MINI-MELF	pbx_bidi[	7B4]
R406	R_0805	pbx_bidi[	7B4]
R407	R_0603	pbx_bidi[	7B6]
R408	R_0603	pbx_bidi[	7B7]
R409	R_0603	pbx_bidi[	7B7]
R410	R_MINI-MELF	pbx_bidi[	8C3]
R411	R_MINI-MELF	pbx_bidi[	8D3]
R412	R_MELF	pbx_bidi[	7B6]
R413	R_MELF	pbx_bidi[	7C6]
R414	R_MELF	pbx_bidi[	7C6]
R415	R_MINI-MELF	pbx_bidi[	7D4]
R416	R_0805	pbx_bidi[	7D4]
R417	R_0603	pbx_bidi[	7D6]
R418	R_0805	pbx_bidi[	8D8]
R419	R_0805	pbx_bidi[	8C8]
R420	R_0805	pbx_bidi[	8D7]
R421	R_MELF	pbx_bidi[	7D6]
R422	R_MELF	pbx_bidi[	7D6]
R423	R_0805	pbx_bidi[	8D8]
R424	R_0805	pbx_bidi[	8C8]
R425	R_0805	pbx_bidi[	8C7]
R426	R_MELF	pbx_bidi[	7D6]
R427	R_0603	pbx_bidi[	7D7]
R428	R_0805	pbx_bidi[	8D4]
R429	R_0805	pbx_bidi[	8C4]
R430	R_0603	pbx_bidi[	7D7]
R431	R_MELF	pbx_bidi[	7D5]
R432	R_MELF	pbx_bidi[	7D5]
R433	R_MELF	pbx_bidi[	7D5]
R434	R_MELF	pbx_bidi[	7D5]
R435	R_MELF	pbx_bidi[	7D5]
R436	R_0805	pbx_bidi[	8D6]
R437	R_MELF	pbx_bidi[	8D5]
R438	R_MELF	pbx_bidi[	8D6]
R439	R_MELF	pbx_bidi[	8D6]
R440	R_MELF	pbx_bidi[	8D5]
R441	R_MELF	pbx_bidi[	8A2]
R442	R_MELF	pbx_bidi[	8B2]
R443	R_0805	pbx_bidi[	7B7]
R444	R_0805	pbx_bidi[	7B7]
R445	R_0805	pbx_bidi[	7B6]
R446	R_0805	pbx_bidi[	7B6]
R447	R_MELF	pbx_bidi[	8D2]
R448	R_MELF	pbx_bidi[	8A2]
R449	R_MELF	pbx_bidi[	8A2]
R450	R_0805	pbx_bidi[	2A8]
R451	R_0805	pbx_bidi[	2A7]
R452	R_MINI-MELF	pbx_bidi[	9C5]
R453	R_MELF	pbx_bidi[	8D1]
R454	R_MELF	pbx_bidi[	8A2]
R455	R_MELF	pbx_bidi[	8A2]
R456	R_MELF	pbx_bidi[	8C2]
R457	R_0805	pbx_bidi[	9C3]
R458	R_MELF	pbx_bidi[	8D1]
R459	R_MINI-MELF	pbx_bidi[	9D3]
REF_S	MP_THT	pbx_bidi[	14D3]
REL1	RELAY_RT_FINDER_1M	pbx_bidi[	2D7 2A8]
REL2	RELAY_RT_FINDER_1M	pbx_bidi[	2C7 2A8]
S+15V	MP_THT	pbx_bidi[	8B8]
S-15V	MP_THT	pbx_bidi[	8B8]
SGND	MP_THT	pbx_bidi[	8B8]
S_GND	MP_THT	pbx_bidi[	8B8]
TEMP_IGBT	MP_THT	pbx_bidi[	14C6]
TEMP_UN	MP_THT	pbx_bidi[	14D5]
TR1	5033001300	pbx_bidi[	5A5]
TR2	5033001300_SMD	pbx_bidi[	6A5]
TR3	5033001300	pbx_bidi[	7A5]
TR4	SL02060312	pbx_bidi[	8B6]
U1	LM3103_TSSOP	pbx_bidi[	3B7]
U2	ADUM1251_SOIC	pbx_bidi[	3C8]
U3	AD7417_TSSOP	pbx_bidi[	3D8]
U4	LMC7101_SMD	pbx_bidi[	3D6]
U5	REF02_SOIC	pbx_bidi[	3C5]
U6	74HC14_SOIC	pbx_bidi[	2A3 2B2 2A2 2B3 2B5 2B2]
U7	74HC14_SOIC	pbx_bidi[	2D4 2D4 2D4 2C4 2D4 2D1]
U8	24C64_SOIC	pbx_bidi[	2C7]

Changes

WARNING
THIS WORK AND THE INFORMATION IT CONTAINS ARE THE PROPERTY OF OTIS ELEVATOR COMPANY (OTIS). IT IS DELIVERED TO OTHERS ON THE EXPRESS CONDITION THAT IT WILL BE USED ONLY FOR OR ON BEHALF OF OTIS ; THAT NEITHER IT OR NOR THE INFORMATION IT CONTAINS WILL BE REPRODUCED OR DISCLOSED, IN WHOLE OR IN PART, WITHOUT THE PRIOR WRITTEN CONSENT OF OTIS ; AND THAT ON DEMAND IT AND ANY COPIES WILL BE PROMPTLY RETURNED TO OTIS.

UNPUBLISHED WORK (C) OTIS ELEVATOR COMPANY
ALL RIGHTS RESERVED.

Otis
A United Technologies Company

CIRCUIT DIAGRAM FOR

PBX_BIDI

CAD GENERATED
CADENCE-CONCEPT

DWG G2A26800MX

OTIS ENGINEERING CENTER
BERLIN, GERMANY

DRAWN	A. Tutat	ORIGINAL DATE
CHK	M. Dehmlow	2009-12-08
APPD	M. Dehmlow	SHEETS
AUTH	CA47A-000528	SHEET 27

U9	UC3845B_SOIC	pbx_bidi[	5A3]
U10	HCPL316J_SOIC	pbx_bidi[	5B3]
U11	74HC14_SOIC	pbx_bidi[	5D2 5B2 5B2 5D2 5B2 5C2]
U12	TL084B_SOIC	pbx_bidi[	13B7 13C7 13C7 13C6]
U13	TL084B_SOIC	pbx_bidi[	13D3 13B3 13B4 13C3]
U14	IL300_COMBI	pbx_bidi[	13B5]
U15	HCPL316J_SOIC	pbx_bidi[	5D3]
U16	IL300_COMBI	pbx_bidi[	14B5]
U17	TL084B_SOIC	pbx_bidi[	14D3 14C6 14B7 14D5]
U18	TL084B_SOIC	pbx_bidi[	14B3 14C2 14C1 14C3]
U19	TL431A_SOIC	pbx_bidi[	5B6]
U20	PS2561L_SOIC	pbx_bidi[	5A6]
U21	PS2561L_SOIC	pbx_bidi[	5A8]
U22	TL431A_SOIC	pbx_bidi[	5B7]
U23	REF02_SOIC	pbx_bidi[	14D1]
U24	IL300_COMBI	pbx_bidi[	12A5]
U25	TL084B_SOIC	pbx_bidi[	9B5]
U25	TL084B_SOIC	pbx_bidi[	11D3]
U25	TL084B_SOIC	pbx_bidi[	12A3 12C3]
U26	UC3845B_SOIC	pbx_bidi[	6A3]
U27	HCPL316J_SOIC	pbx_bidi[	6B3]
U28	74HC14_SOIC	pbx_bidi[	6B2 6D2 6B2 6C2 6D2 6B2]
U29	TL084B_SOIC	pbx_bidi[	11B6 11B7]
U29	TL084B_SOIC	pbx_bidi[	12B6 12B7]
U30	REF02_SOIC	pbx_bidi[	11D2]
U31	TL084B_SOIC	pbx_bidi[	9A5]
U31	TL084B_SOIC	pbx_bidi[	11C3 11A3 11C2]
U32	HCPL316J_SOIC	pbx_bidi[	6D3]
U33	IL300_COMBI	pbx_bidi[	11A5]
U34	TL084B_SOIC	pbx_bidi[	10D4 10A4 10B2 10D2]
U35	LM339A_SOIC	pbx_bidi[	10C2 10C2 10B8 10B7]
U36	TL431A_SOIC	pbx_bidi[	6B6]
U37	PS2561L_SOIC	pbx_bidi[	6A6]
U38	PS2561L_SOIC	pbx_bidi[	6A8]
U39	TL431A_SOIC	pbx_bidi[	6B7]
U40	555_CMOS	pbx_bidi[	10C4]
U41	PS2561L_SOIC	pbx_bidi[	10C6]
U42	UC3845B_SOIC	pbx_bidi[	7A3]
U43	HCPL316J_SOIC	pbx_bidi[	7B3]
U44	74HC14_SOIC	pbx_bidi[	7B2 7B2 7D2 7B2 7D2 7C2]
U45	HCPL316J_SOIC	pbx_bidi[	7D3]
U46	PS2561L_SOIC	pbx_bidi[	8C6]
U47	TL431A_SOIC	pbx_bidi[	8D8]
U48	UC3845B_SOIC	pbx_bidi[	8C4]
U49	TL431A_SOIC	pbx_bidi[	7B6]
U50	PS2561L_SOIC	pbx_bidi[	7A6]
U51	PS2561L_SOIC	pbx_bidi[	7A8]
U52	TL431A_SOIC	pbx_bidi[	7B7]
U53	PS2561L_SOIC	pbx_bidi[	2A6]
U54	24C64_SOIC	pbx_bidi[	3A7]
U55	TL084B_SOIC	pbx_bidi[	9B3 9C3 9B3 9A3]
U56	74HC14_SOIC	pbx_bidi[	3A4 3D2 3A4 3A4 3D2 3D2]
U57	555_CMOS	pbx_bidi[	9D3]
UDCL	MP_THT	pbx_bidi[	13C7]
VCC	MP_THT	pbx_bidi[	2B1]

VRS	MP_THT	pbx_bidi[	11B6]
VRS_N	MP_THT	pbx_bidi[	11B7]
VRS_NP	MP_THT	pbx_bidi[	9A6]
VST	MP_THT	pbx_bidi[	12B6]
VST_N	MP_THT	pbx_bidi[	12B7]
VST_NP	MP_THT	pbx_bidi[	9B6]
Z1	BZV55B11_SMD	pbx_bidi[	5A3]
Z2	SMBJ60CA_SMD	pbx_bidi[	5A6]
Z3	SMBJ60CA_SMD	pbx_bidi[	5A6]
Z4	BZX84C3V9_SMD	pbx_bidi[	5A6]
Z5	BZX84C3V9_SMD	pbx_bidi[	5A7]
Z6	BZV55B11_SMD	pbx_bidi[	6A3]
Z7	SMBJ60CA_SMD	pbx_bidi[	6A6]
Z8	SMBJ60CA_SMD	pbx_bidi[	6A6]
Z9	BZX84C3V9_SMD	pbx_bidi[	6A6]
Z10	BZX84C3V9_SMD	pbx_bidi[	6A7]
Z11	BZV55B11_SMD	pbx_bidi[	7A3]
Z12	SM6T22CA	pbx_bidi[	8D3]
Z13	SMBJ60CA_SMD	pbx_bidi[	7A6]
Z14	SMBJ60CA_SMD	pbx_bidi[	7A6]
Z15	BZX84C18_SMD	pbx_bidi[	8D5]
Z16	BZX84C3V9_SMD	pbx_bidi[	7A6]
Z17	BZX84C3V9_SMD	pbx_bidi[	7A7]
Z18	SMBJ36CA_SMD	pbx_bidi[	8A1]
Z19	SMBJ36CA_SMD	pbx_bidi[	8C1]
Z20	SM6T33CA_SMD	pbx_bidi[	5A5]
Z21	BZV55B9V1_SMD	pbx_bidi[	5B4]
Z22	BZV55B18_SMD	pbx_bidi[	5B4]
Z23	BZV55B18_SMD	pbx_bidi[	5B7]
Z24	BZV55B18_SMD	pbx_bidi[	5B6]
Z25	BZV55B18_SMD	pbx_bidi[	5B6]
Z26	BZV55B18_SMD	pbx_bidi[	5B8]
Z27	BZV55B18_SMD	pbx_bidi[	5B8]
Z28	BZV55B18_SMD	pbx_bidi[	5B7]
Z29	BZV55B9V1_SMD	pbx_bidi[	5D4]
Z30	BZV55B18_SMD	pbx_bidi[	5D4]
Z31	BZV55B18_SMD	pbx_bidi[	5D6]
Z32	BZV55B18_SMD	pbx_bidi[	5D8]
Z33	BZV55B18_SMD	pbx_bidi[	5D8]
Z34	BZV55B18_SMD	pbx_bidi[	5D7]
Z35	BZV55B18_SMD	pbx_bidi[	5D7]
Z36	BZV55B18_SMD	pbx_bidi[	5D6]
Z37	SM6T33CA_SMD	pbx_bidi[	6A5]
Z38	BZV55B9V1_SMD	pbx_bidi[	6B4]
Z39	BZV55B18_SMD	pbx_bidi[	6B4]
Z40	BZV55B18_SMD	pbx_bidi[	6B7]
Z41	BZV55B18_SMD	pbx_bidi[	6B6]
Z42	BZV55B18_SMD	pbx_bidi[	6B6]
Z43	BZV55B18_SMD	pbx_bidi[	6B8]
Z44	BZV55B18_SMD	pbx_bidi[	6B8]
Z45	BZV55B18_SMD	pbx_bidi[	6B7]
Z46	BZV55B9V1_SMD	pbx_bidi[	6D4]
Z47	BZV55B18_SMD	pbx_bidi[	6D4]
Z48	BZV55B18_SMD	pbx_bidi[	6D6]
Z49	BZV55B18_SMD	pbx_bidi[	6D8]

Changes

WARNING
THIS WORK AND THE INFORMATION IT CONTAINS ARE THE PROPERTY OF OTIS ELEVATOR COMPANY (OTIS). IT IS DELIVERED TO OTHERS ON THE EXPRESS CONDITION THAT IT WILL BE USED ONLY FOR OR ON BEHALF OF OTIS ; THAT NEITHER IT OR NOR THE INFORMATION IT CONTAINS WILL BE REPRODUCED OR DISCLOSED, IN WHOLE OR IN PART, WITHOUT THE PRIOR WRITTEN CONSENT OF OTIS ; AND THAT ON DEMAND IT AND ANY COPIES WILL BE PROMPTLY RETURNED TO OTIS.

UNPUBLISHED WORK (C) OTIS ELEVATOR COMPANY
ALL RIGHTS RESERVED.

Otis
A United Technologies Company

CIRCUIT DIAGRAM FOR

PBX_BIDI

CAD GENERATED
CADENCE-CONCEPT

DWG G2A26800MX

OTIS ENGINEERING CENTER
BERLIN, GERMANY

DRAWN	A. Tutat	ORIGINAL DATE
CHK	M. Dehmlow	2009-12-08
APPD	M. Dehmlow	SHEETS
AUTH	CA47A-000528	SHEET 28

Z50	BZV55B18_SMD	pbx_bidi[	6D8	]
Z51	BZV55B18_SMD	pbx_bidi[	6D7	]
Z52	BZV55B18_SMD	pbx_bidi[	6D7	]
Z53	BZV55B18_SMD	pbx_bidi[	6D6	]
Z54	SM6T33CA_SMD	pbx_bidi[	7A5	]
Z55	BZV55B9V1_SMD	pbx_bidi[	7B4	]
Z56	BZV55B18_SMD	pbx_bidi[	7B4	]
Z57	BZV55B18_SMD	pbx_bidi[	7B7	]
Z58	BZV55B18_SMD	pbx_bidi[	7B6	]
Z59	BZV55B18_SMD	pbx_bidi[	7B6	]
Z60	BZV55B18_SMD	pbx_bidi[	7B8	]
Z61	BZV55B18_SMD	pbx_bidi[	7B8	]
Z62	BZV55B18_SMD	pbx_bidi[	7B7	]
Z63	BZV55B9V1_SMD	pbx_bidi[	7D4	]
Z64	BZV55B18_SMD	pbx_bidi[	7D4	]
Z65	BZV55B18_SMD	pbx_bidi[	7D6	]
Z66	BZV55B18_SMD	pbx_bidi[	7D8	]
Z67	BZV55B18_SMD	pbx_bidi[	7D8	]
Z68	BZV55B18_SMD	pbx_bidi[	7D7	]
Z69	BZV55B18_SMD	pbx_bidi[	7D7	]
Z70	SMBJ30CA	pbx_bidi[	8B6	]
Z71	BZV55B18_SMD	pbx_bidi[	7D6	]
Z72	SMBJ90CA_SMD	pbx_bidi[	8B7	]
Z73	BZG05C4V7_SMD	pbx_bidi[	8B5	]
Z74	BZV55C3V3_SMD	pbx_bidi[	8D5	]
Z75	SMBJ90CA_SMD	pbx_bidi[	8B7	]
Z76	SM15T27CA_SMD	pbx_bidi[	3A4	]
Z77	BZV55B12_SMD	pbx_bidi[	9D4	]

Changes

WARNING
THIS WORK AND THE INFORMATION IT CONTAINS ARE THE PROPERTY OF OTIS ELEVATOR COMPANY (OTIS). IT IS DELIVERED TO OTHERS ON THE EXPRESS CONDITION THAT IT WILL BE USED ONLY FOR OR ON BEHALF OF OTIS ; THAT NEITHER IT OR NOR THE INFORMATION IT CONTAINS WILL BE REPRODUCED OR DISCLOSED, IN WHOLE OR IN PART, WITHOUT THE PRIOR WRITTEN CONSENT OF OTIS ; AND THAT ON DEMAND IT AND ANY COPIES WILL BE PROMPTLY RETURNED TO OTIS.

UNPUBLISHED WORK (C) OTIS ELEVATOR COMPANY
ALL RIGHTS RESERVED.

Otis
A United Technologies Company

CIRCUIT DIAGRAM FOR

PBX_BIDI

CAD GENERATED
CADENCE-CONCEPT

DWG G2A26800MX

OTIS ENGINEERING CENTER
BERLIN, GERMANY

DRAWN	A. Tutat	ORIGINAL DATE
CHK	M. Dehmlow	2009-12-08
APPD	M. Dehmlow	SHEETS
AUTH	CA47A-000528	SHEET 29

OECB_A3
REV 2004-09-06

A2	8	7	6	5	4	3	2	1

TOP VIEW
Sicht auf
Bestückungsseite

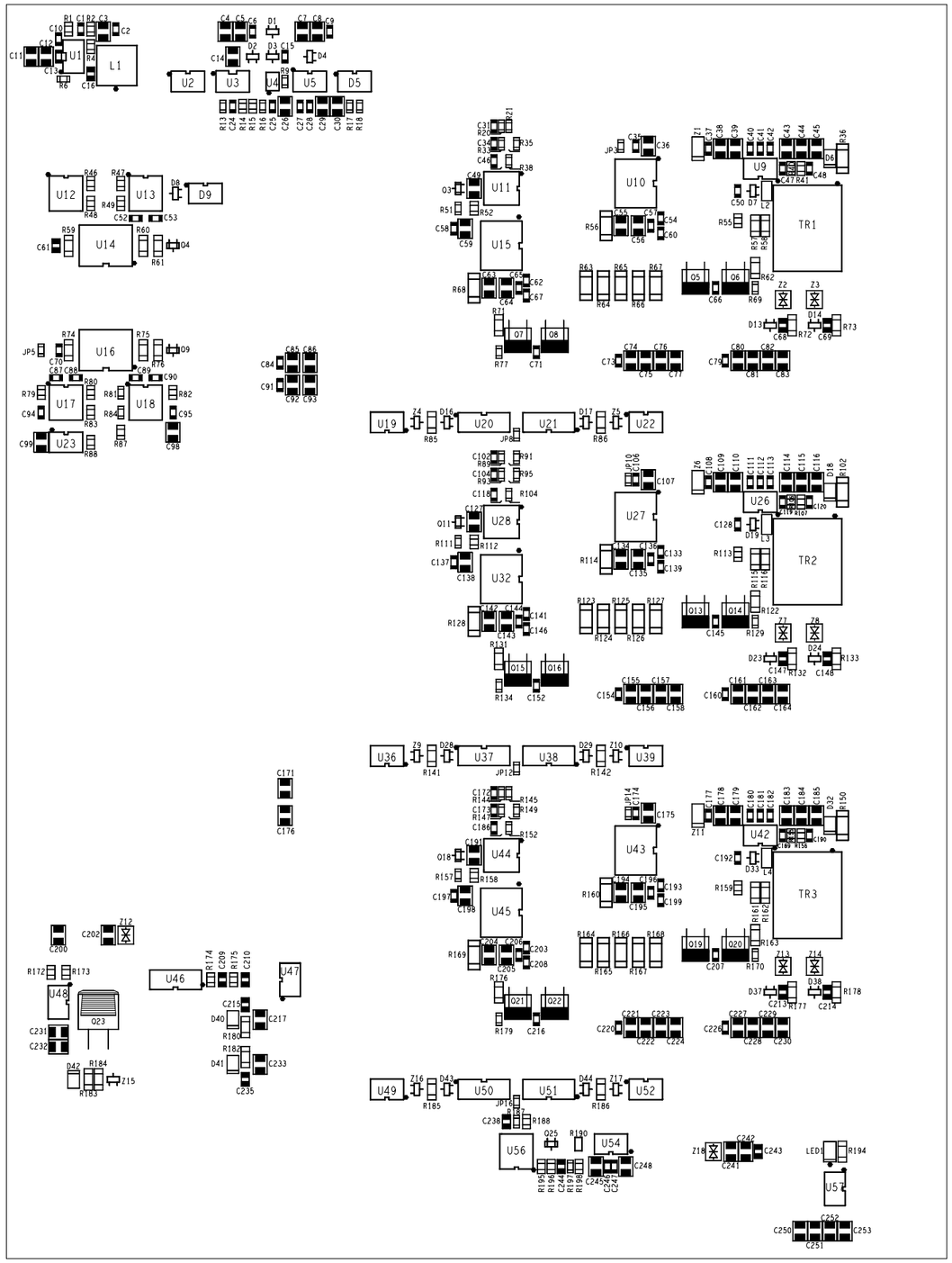

ALL DIMENSIONS METRIC

CHANGES

WARNING

This work and the information it contains are the property of OTIS Elevator Company (OTIS). It is delivered to others on the express condition that it will be used only for, or on behalf of, OTIS; that neither it nor the information it contains will be reproduced or disclosed, in whole or in part, without the prior written consent of OTIS; and that on demand it and any copies will be promptly returned to OTIS.

Unpublished work (C) OTIS Elevator Company 1998

All rights reserved.

OTIS
A United Technologies Company

PCB LAYOUT

PBX_BIDI

CADENCE ALLEGRO
CAD GENERATED

SMD-Lageplan

Part-No. / Teil-Nr. G2A26800MX1

Scale / Massstab 1 : 1

DWG G2A26800MX

OTIS ENGINEERING CENTER
BERLIN, GERMANY

DRAWN	S. KOEPPEN	ORIGINAL DATE 2009-12-08
CHK	A. TUTAT	
APPD	M. DEHMLOW	SHEETS
AUTH	CA47A-000528	SHEET 30

OECB A2
REV 1998-11-13

BOTTOM VIEW
Sicht auf
Loetseite

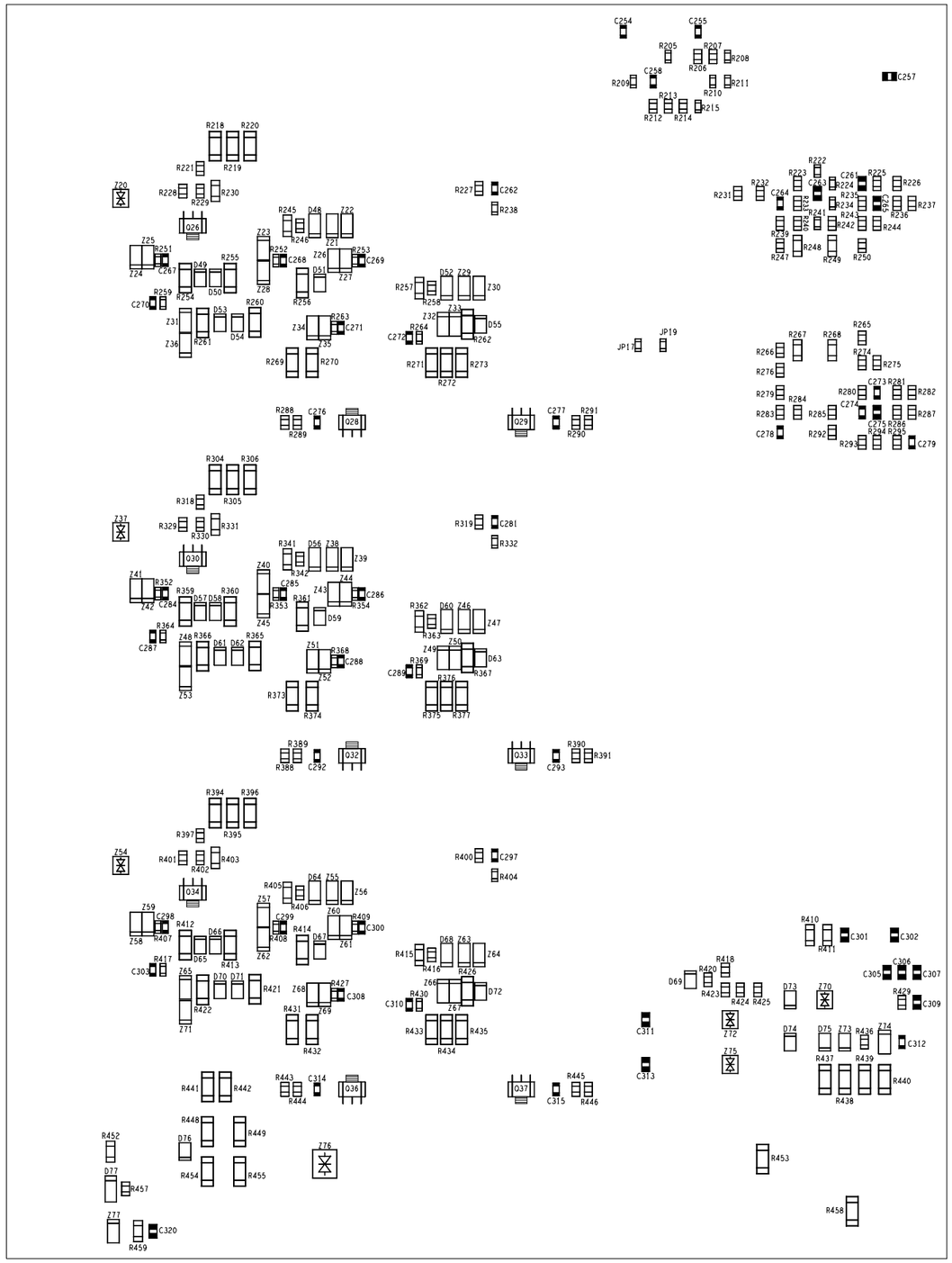

ALL DIMENSIONS METRIC

CHANGES	WARNING	PCB LAYOUT	SMD-Lageplan
	This work and the information it contains are the property of OTIS Elevator Company (OTIS). It is delivered to others on the express condition that it will be used only for, or on behalf of, OTIS, that neither it nor the information it contains will be reproduced or disclosed, in whole or in part, without the prior written consent of OTIS, and that on demand it and any copies will be promptly returned to OTIS. Unpublished work (C) OTIS Elevator Company 1998 All rights reserved. OTIS — A United Technologies Company	PBX_BIDI CADENCE ALLEGRO CAD GENERATED	Part-No. / Teil-Nr. G2A26800MX1 Scale / Massstab 1:1 DWG G2A26800MX OTIS ENGINEERING CENTER BERLIN, GERMANY DRAWN S. KOEPPEN — ORIGINAL DATE 2009-12-08 CHK A. TUTAT APPD M. DEHMLOW — SHEETS AUTH CA47A-000528 — SHEET 31

OECB A2
REV 1998-11-13

TOP VIEW
Sicht auf
Bestückungsseite

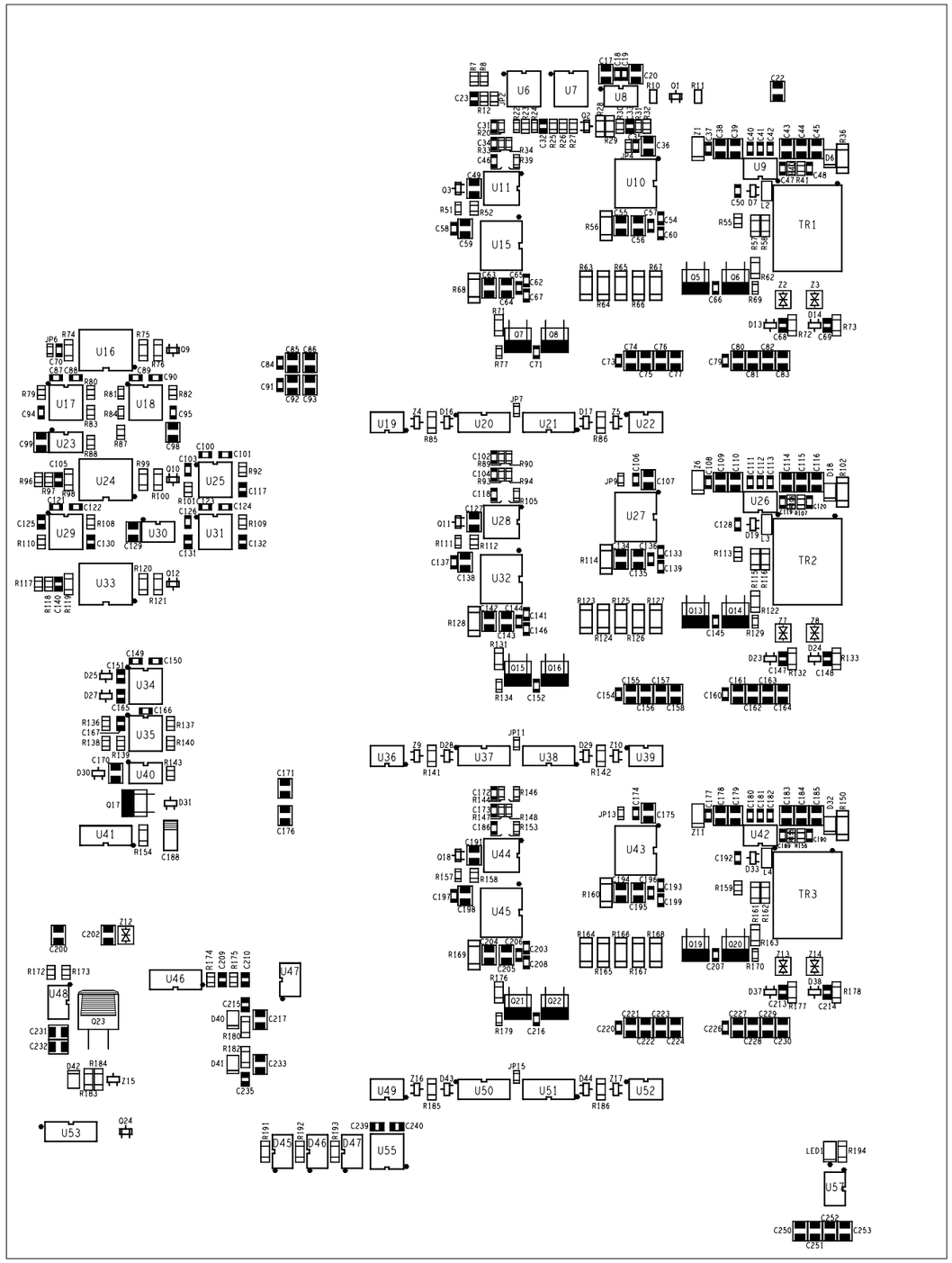

ALL DIMENSIONS METRIC

CHANGES

WARNING

This work and the information it contains are the property of OTIS Elevator Company (OTIS). It is delivered to others on the express condition that it will be used only for, or on behalf of, OTIS; that neither it nor the information it contains will be reproduced or disclosed, in whole or in part, without the prior written consent of OTIS; and that on demand it and any copies will be promptly returned to OTIS.

Unpublished work (C) OTIS Elevator Company 1998

All rights reserved.

A United Technologies Company

PCB LAYOUT

PBX_BIDI

CADENCE ALLEGRO
CAD GENERATED

SMD-Lageplan

Part-No. / Teil-Nr.: G2A26800MX2

Scale / Massstab: 1:1

DWG G2A26800MX

OTIS ENGINEERING CENTER
BERLIN, GERMANY

DRAWN	S. KOEPPEN	ORIGINAL DATE 2009-12-08
CHK	A. TUTAT	
APPD	M. DEHMLOW	SHEETS
AUTH	CA47A-000528	SHEET 32

OECB_A2
REV T998.11-13

BOTTOM VIEW
Sicht auf
Loetseite

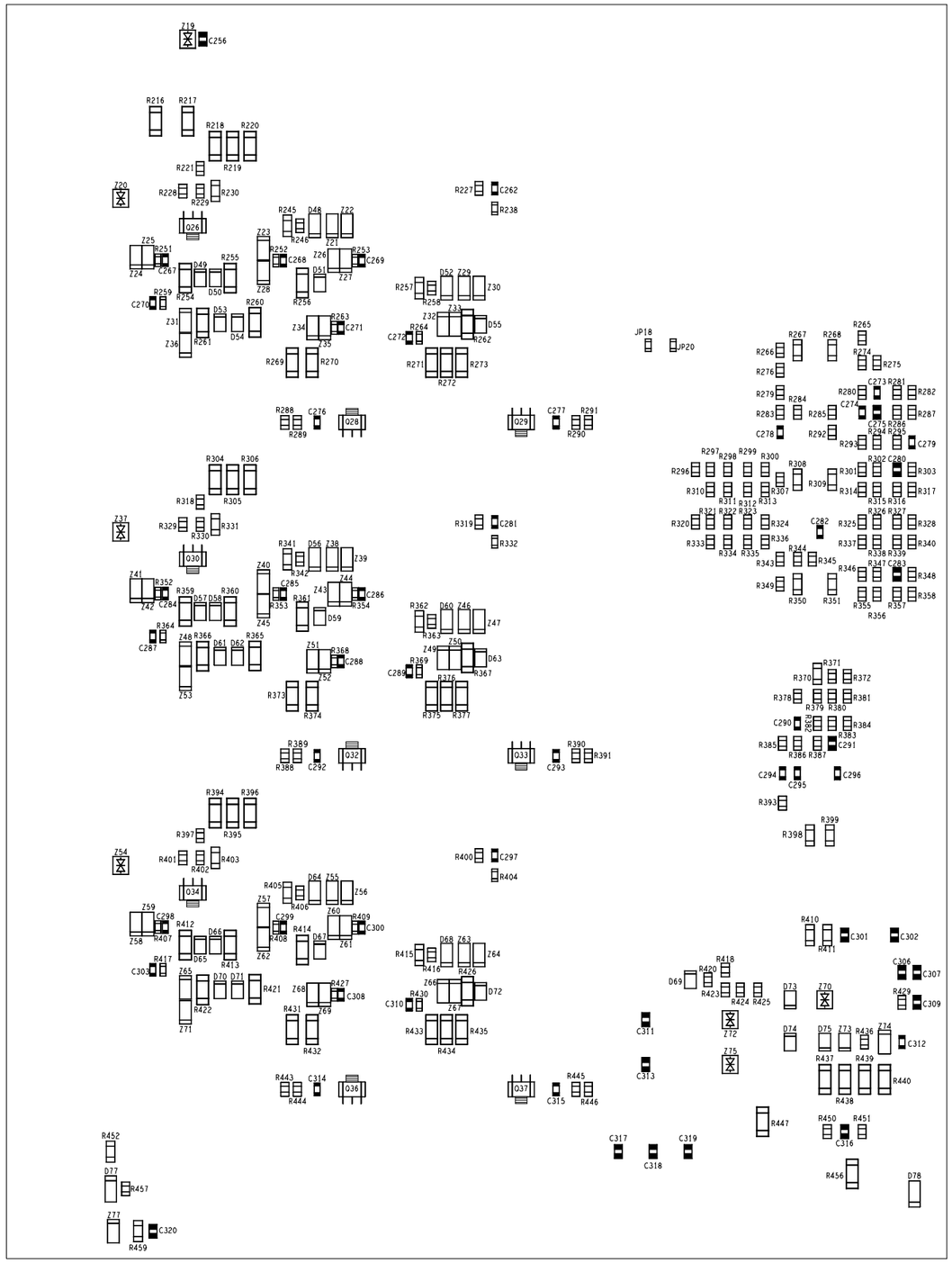

ALL DIMENSIONS METRIC

CHANGES

WARNING

This work and the information it contains are the property of OTIS Elevator Company (OTIS). It is delivered to others on the express condition that it will be used only for, or on behalf of, OTIS; that neither it nor the information it contains will be reproduced or disclosed, in whole or in part, without the prior written consent of OTIS; and that on demand it and any copies will be promptly returned to OTIS.

Unpublished work (C) OTIS Elevator Company 1998

All rights reserved.

A United Technologies Company

PCB LAYOUT

PBX_BIDI

CADENCE ALLEGRO
CAD GENERATED

SMD-Lageplan

Part-No. / Teil-Nr. G2A26800MX2

Scale / Massstab 1:1

DWG G2A26800MX

OTIS ENGINEERING CENTER
BERLIN, GERMANY

DRAWN	S. KOEPPEN	ORIGINAL DATE 2009-12-08
CHK	A. TUTAT	
APPD	M. DEHMLOW	SHEETS
AUTH	CA47A-000528	SHEET 33

QECB_A2
REV 1998-11-13

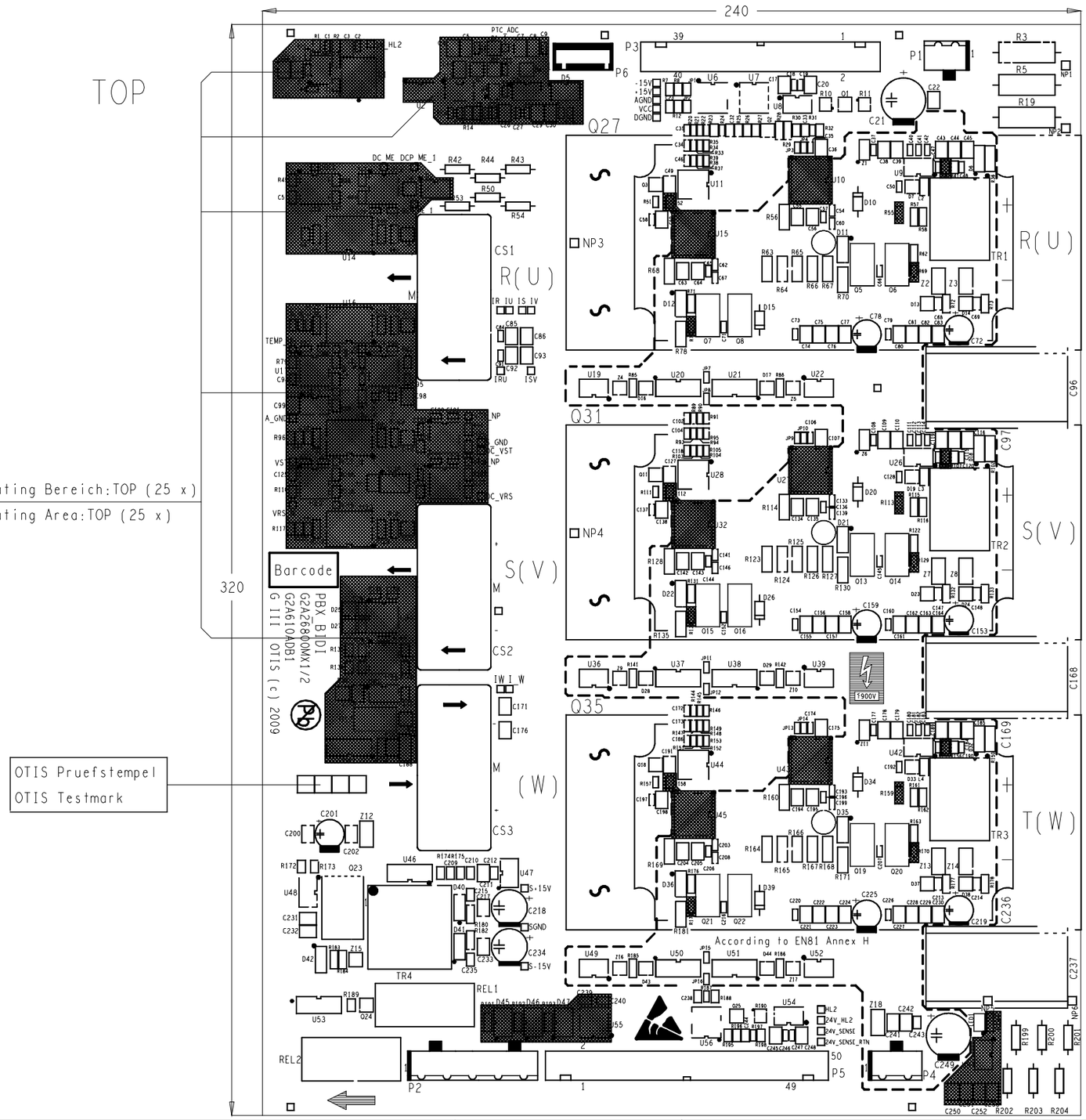

TOP VIEW
Sicht auf
Bestückungsseite

Stecker Plugs	Geeignete Gegenstecker Suitable Plugs
P1	xxx
P2	xxx
P3	xxx
P4	xxx
P5	xxx
P6	xxx

Abstand zwischen Bauteil und PCB ≥ 3mm :
R3,R5,R19,R42,R43,R44,R50,R53,R54,R199,
R200,R201,R202,R203,R204
Distance between component and PCB ≥ 3mm :
R3,R5,R19,R42,R43,R44,R50,R53,R54,R199,
R200,R201,R202,R203,R204

Hight: xx,xxmm
Hohe: w/o IGBT-Module

Hight: xx,xxmm
Hohe: incl. IGBT-Module

Gewicht: xxx g
Weight:

Teil Nr.: G2A26800MX1/2
Part No.:

Quality Criteria : G2A26800MX_TR

ALL DIMENSIONS METRIC

CHANGES

WARNING
This work and the information it contains are the property of OTIS Elevator Company (OTIS). It is delivered to others on the express condition that it will be used only for, or on behalf of, OTIS; that neither it nor the information it contains will be reproduced or disclosed, in whole or in part, without the prior written consent of OTIS; and that on demand it and any copies will be promptly returned to OTIS.
Unpublished work (C) OTIS Elevator Company 1998
All rights reserved.

A United Technologies Company

PCB LAYOUT
PBX_BIDI
CADENCE ALLEGRO
CAD GENERATED

DWG G2A26800MX
OTIS ENGINEERING CENTER
BERLIN, GERMANY

DRAWN	S.KOEPPEN	ORIGINAL DATE
CHK	A.TUTAT	2009-12-08
APPD	M.DEHMLOW	SHEETS
AUTH	CA47A-000528	SHEET 34

OECB_A2
REV 1998-11-13

BOTTOM

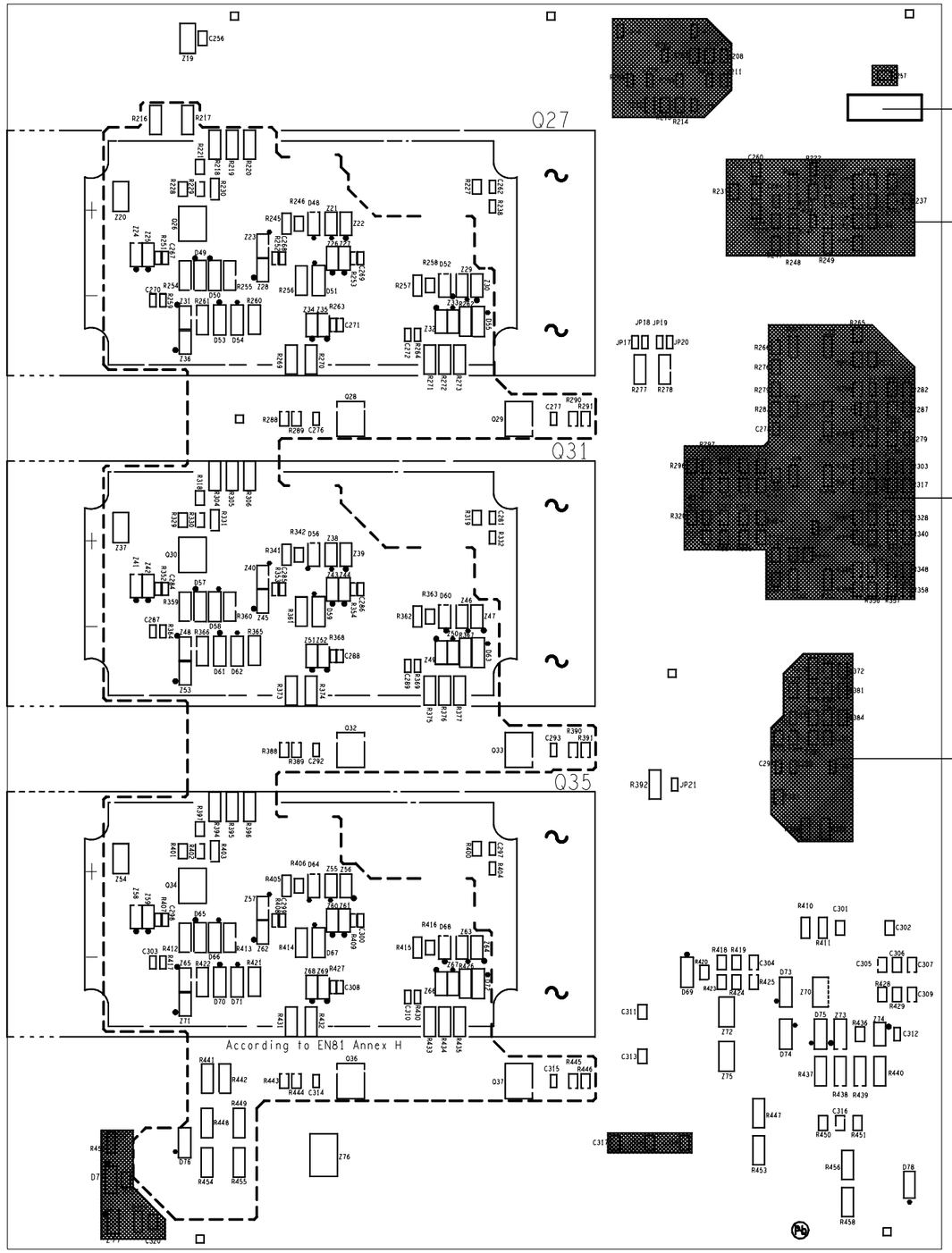

BOTTOM VIEW
Sicht auf
Lötseite

Herstellersymbol/Fertigungsdatum
Manufacturersymbol/Datecode

Coating Bereich:BOTOM (7 x)
Coating Area:BOTTOM (7 x)

ALL DIMENSIONS METRIC

CHANGES

WARNING

This work and the information it contains are the property of OTIS Elevator Company (OTIS). It is delivered to others on the express condition that it will be used only for, or on behalf of, OTIS; that neither it nor the information it contains will be reproduced or disclosed, in whole or in part, without the prior written consent of OTIS; and that on demand it and any copies will be promptly returned to OTIS.

Unpublished work (C) OTIS Elevator Company 1998
All rights reserved.

A United Technologies Company

PCB LAYOUT

PBX_BIDI

CADENCE ALLEGRO
CAD GENERATED

DWG	G2A26800MX
	OTIS ENGINEERING CENTER BERLIN, GERMANY
DRAWN S.KOEPPEN	ORIGINAL DATE
CHK A.TUTAT	2009-12-08
APPD M.DEHMLOW	SHEETS
AUTH CA47A-000528	SHEET 35

OECB A2
REV 1998-11-13