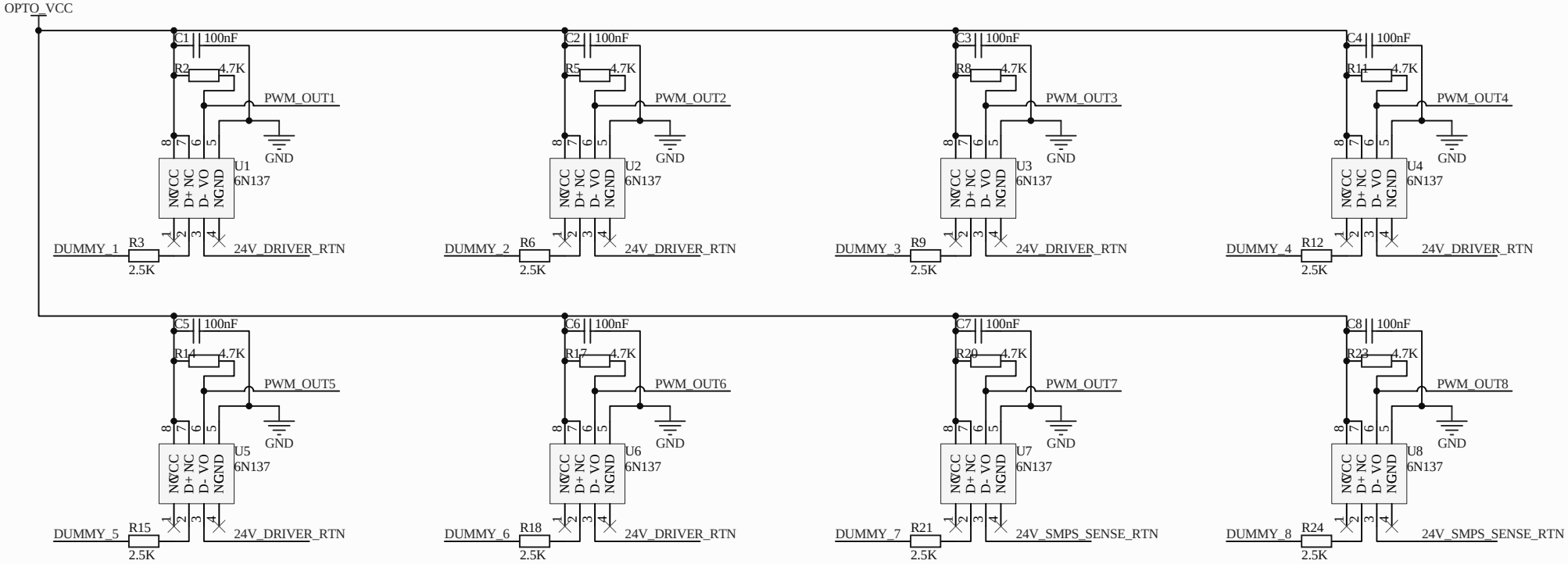

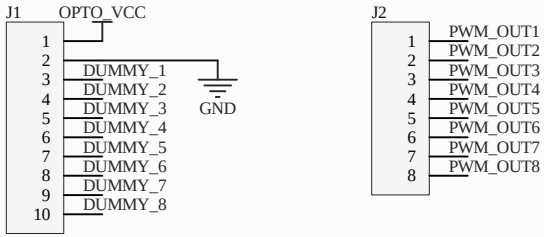

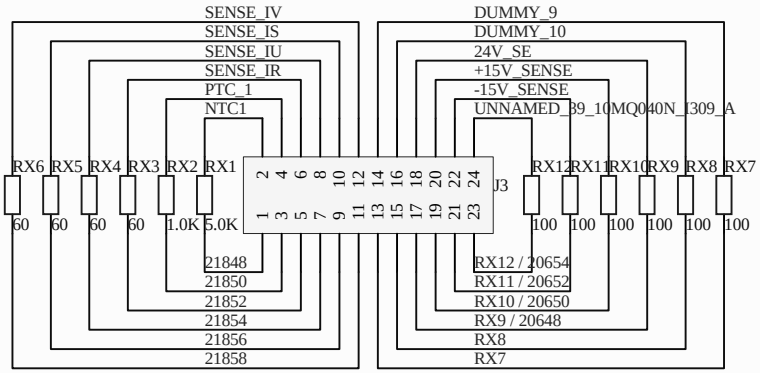

Note :
All the net name are the Agilent3070 ICT fixture P-pins.

Title	OPTO Board Wiring	
Size A4	Number OTIS G2A26800MXx ICT Fixture Design Wiring	Revision 1.0
Date: 2010-1-25	Sheet of 2 to 2	
File: C:\Agilent3070\..\opto_board_v1.0.SchDoc	Drawn By: Kicky Chen	