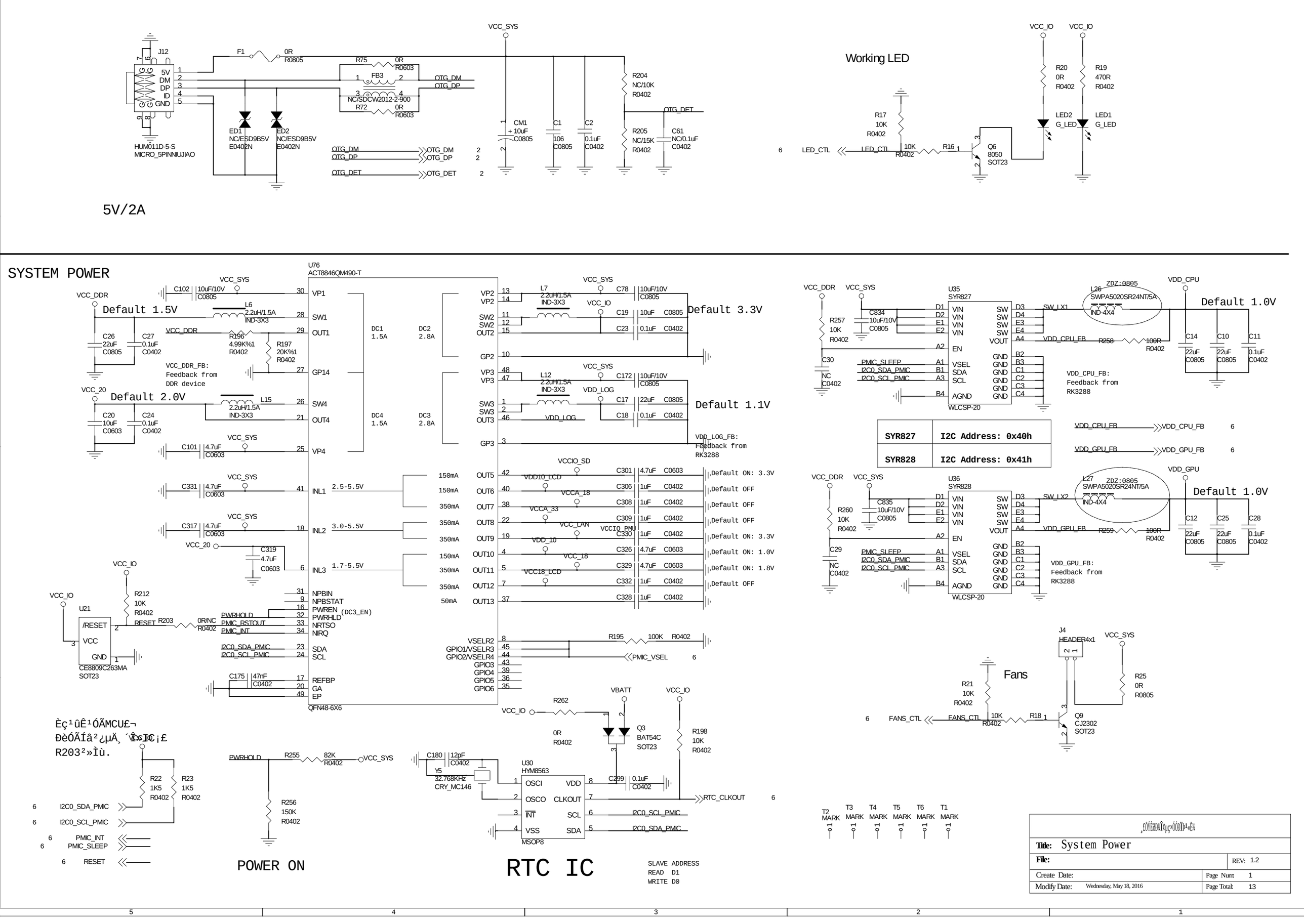
J12
5V
DM
DP
ID
GND
HUM011D-5-S
MICRO_5PINNIUJIAO
F1
0R
R0805
R75
0R
R0603
FB3
NC/SDCW2012-2-900
R72
0R
R0603
OTG_DM
OTG_DP
OTG_DET
ED1
NC/ESD9B5V
E0402N
ED2
NC/ESD9B5V
E0402N
VCC_SYS
CM1
+ 10uF
C0805
C1
106
C0805
C2
0.1uF
C0402
R204
NC/10K
R0402
R205
NC/15K
R0402
C61
NC/0.1uF
C0402
5V/2A
Working LED
VCC_IO
R20
0R
R0402
R19
470R
R0402
LED2
G_LED
LED1
G_LED
R17
10K
R0402
LED_CTL
R16
Q6
8050
SOT23
SYSTEM POWER
U76
ACT8846QM490-T
VCC_DDR
Default 1.5V
L6
2.2uH/1.5A
IND-3X3
C26
22uF
C0805
C27
0.1uF
C0402
R196
4.99K%1
R0402
R197
20K%1
R0402
VCC_DDR_FB:
Feedback from
DDR device
VCC_20
Default 2.0V
L15
2.2uH/1.5A
IND-3X3
C20
10uF
C0603
C24
0.1uF
C0402
C101
4.7uF
C0603
C102
10uF/10V
C0805
VP1
SW1
OUT1
GP14
SW4
OUT4
VP4
DC1
1.5A
DC2
2.8A
DC4
1.5A
DC3
2.8A
VP2
SW2
OUT2
GP2
VP3
SW3
OUT3
GP3
L7
2.2uH/1.5A
IND-3X3
VCC_IO
C78
10uF/10V
C0805
C19
10uF
C0805
C23
0.1uF
C0402
Default 3.3V
L12
2.2uH/1.5A
IND-3X3
VDD_LOG
C172
10uF/10V
C0805
C17
22uF
C0805
C18
0.1uF
C0402
Default 1.1V
VDD_LOG_FB:
Feedback from
RK3288
C331
4.7uF
C0603
INL1
2.5-5.5V
C317
4.7uF
C0603
INL2
3.0-5.5V
C319
4.7uF
C0603
INL3
1.7-5.5V
OUT5
OUT6
OUT7
OUT8
OUT9
OUT10
OUT11
OUT12
OUT13
150mA
150mA
350mA
350mA
350mA
150mA
350mA
350mA
50mA
VCCIO_SD
VDD10_LCD
VCCA_18
VCCA_33
VCC_LAN
VCCIO_PMU
VDD_10
VCC_18
VCC18_LCD
C301
4.7uF
C0603
C306
1uF
C0402
C308
1uF
C0402
C309
1uF
C0402
C330
1uF
C0402
C326
4.7uF
C0603
C329
4.7uF
C0603
C332
1uF
C0402
C328
1uF
C0402
Default ON: 3.3V
Default OFF
Default OFF
Default OFF
Default ON: 3.3V
Default ON: 1.0V
Default ON: 1.8V
Default OFF
NPBIN
NPBSTAT
PWREN (DC3_EN)
PWRHLD
NRTSO
NIRQ
SDA
SCL
REFBP
GA
EP
QFN48-6X6
PWRHOLD
PMIC_RSTOUT
PMIC_INT
I2C0_SDA_PMIC
I2C0_SCL_PMIC
VSELR2
GPIO1/VSELR3
GPIO2/VSELR4
GPIO3
GPIO4
GPIO5
GPIO6
R195
100K
R0402
PMIC_VSEL
VCC_IO
R212
10K
R0402
U21
/RESET
VCC
GND
CE8809C263MA
SOT23
RESET
R203
0R/NC
R0402
C175
47nF
C0402
U35
SYR827
VIN
EN
VSEL
SDA
SCL
AGND
SW
VOUT
GND
WLCSP-20
PMIC_SLEEP
I2C0_SDA_PMIC
I2C0_SCL_PMIC
VCC_DDR
VCC_SYS
R257
10K
R0402
C834
10uF/10V
C0805
C30
NC
C0402
L26
ZDZ:0805
SWPA5020SR24NT/5A
IND-4X4
SW_LX1
VDD_CPU
Default 1.0V
VDD_CPU_FB
R258
100R
R0402
C14
22uF
C0805
C10
22uF
C0805
C11
0.1uF
C0402
VDD_CPU_FB:
Feedback from
RK3288
SYR827 | I2C Address: 0x40h
SYR828 | I2C Address: 0x41h
VDD_CPU_FB
VDD_GPU_FB
U36
SYR828
R260
10K
R0402
C835
10uF/10V
C0805
C29
NC
C0402
L27
ZDZ:0805
SWPA5020SR24NT/5A
IND-4X4
SW_LX2
VDD_GPU
Default 1.0V
VDD_GPU_FB
R259
100R
R0402
C12
22uF
C0805
C25
22uF
C0805
C28
0.1uF
C0402
VDD_GPU_FB:
Feedback from
RK3288
J4
HEADER4x1
Fans
R21
10K
R0402
FANS_CTL
R18
Q9
CJ2302
SOT23
R25
0R
R0805
Èç¹ûÊ¹ÓÃMCU£¬
ÐèÓÃÍâ²¿µÄ¸´Î»Ïß¡£
R203²»Ìù.
R22
1K5
R0402
R23
1K5
R0402
I2C0_SDA_PMIC
I2C0_SCL_PMIC
PMIC_INT
PMIC_SLEEP
RESET
POWER ON
PWRHOLD
R255
82K
R0402
VCC_SYS
R256
150K
R0402
C180
12pF
C0402
Y5
32.768KHz
CRY_MC146
U30
HYM8563
OSCI
OSCO
INT
VSS
VDD
CLKOUT
SCL
SDA
MSOP8
C299
0.1uF
C0402
RTC_CLKOUT
I2C0_SCL_PMIC
I2C0_SDA_PMIC
VBATT
R262
0R
R0402
Q3
BAT54C
SOT23
R198
10K
R0402
RTC IC
SLAVE ADDRESS
READ D1
WRITE D0
T2 MARK
T3 MARK
T4 MARK
T5 MARK
T6 MARK
T1 MARK
Title: System Power
File:
REV: 1.2
Create Date:
Modify Date: Wednesday, May 18, 2016
Page Num: 1
Page Total: 13

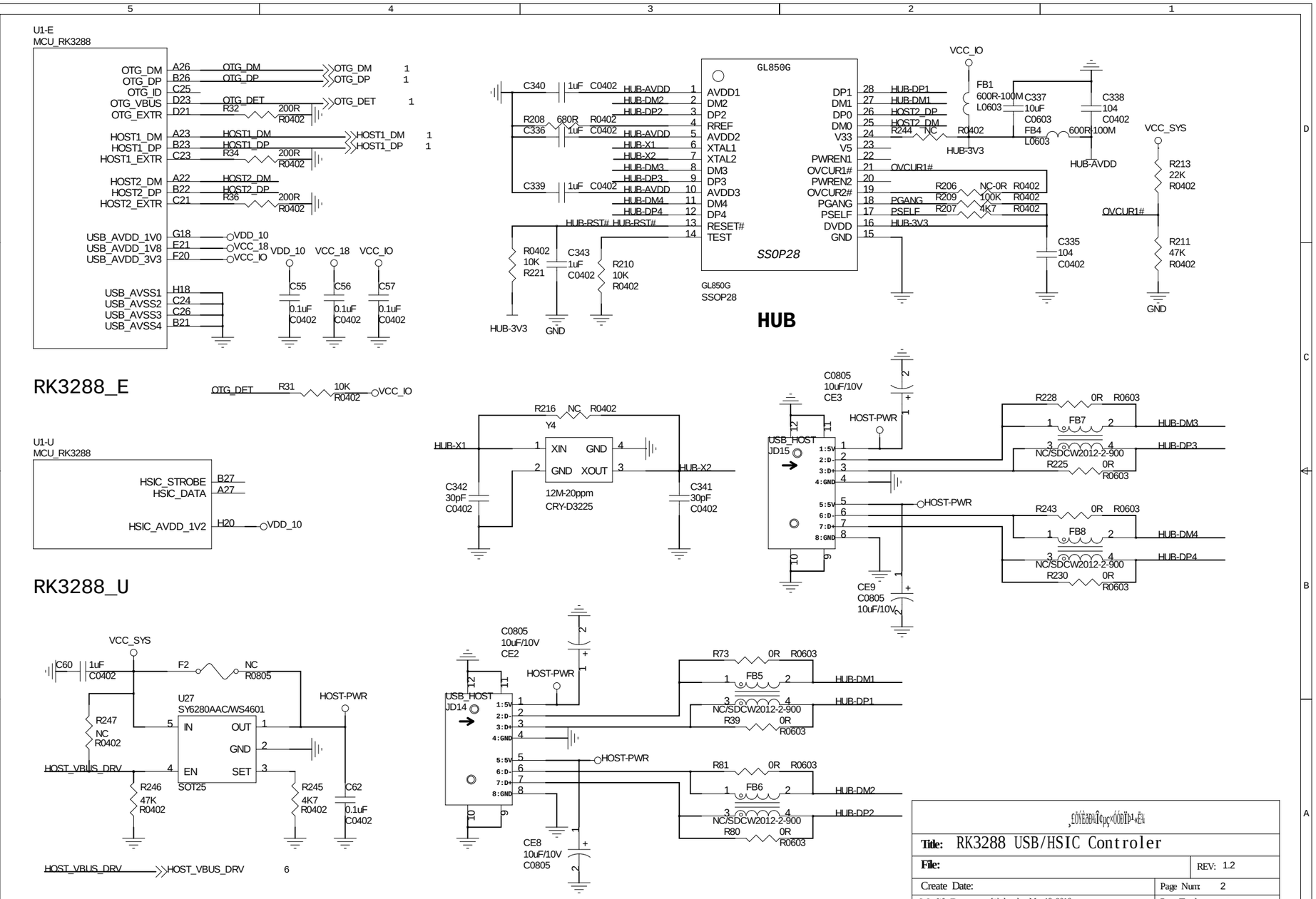
U1-E
MCU_RK3288
OTG_DM A26
OTG_DP B26
OTG_ID C25
OTG_VBUS D23
OTG_EXTR D21
HOST1_DM A23
HOST1_DP B23
HOST1_EXTR C23
HOST2_DM A22
HOST2_DP B22
HOST2_EXTR C21
USB_AVDD_1V0 G18
USB_AVDD_1V8 E21
USB_AVDD_3V3 F20
USB_AVSS1 H18
USB_AVSS2 C24
USB_AVSS3 C26
USB_AVSS4 B21
VDD_10
VCC_18
VCC_IO
C55 0.1uF C0402
C56 0.1uF C0402
C57 0.1uF C0402
R32 200R R0402
R34 200R R0402
R36 200R R0402
OTG_DET
HOST1_DM
HOST1_DP
HOST2_DM
HOST2_DP
RK3288_E
OTG_DET R31 10K R0402 VCC_IO
U1-U
MCU_RK3288
HSIC_STROBE B27
HSIC_DATA A27
HSIC_AVDD_1V2 H20
VDD_10
RK3288_U
VCC_SYS
C60 1uF C0402
F2 NC R0805
U27
SY6280AAC/WS4601
IN
OUT
GND
EN
SET
SOT25
R247 NC R0402
R246 47K R0402
R245 4K7 R0402
C62 0.1uF C0402
HOST_VBUS_DRV
HOST-PWR
GL850G
SSOP28
AVDD1
DM2
DP2
RREF
AVDD2
XTAL1
XTAL2
DM3
DP3
AVDD3
DM4
DP4
RESET#
TEST
DP1
DM1
DP0
DM0
V33
V5
PWREN1
OVCUR1#
PWREN2
OVCUR2#
PGANG
PSELF
DVDD
GND
HUB-AVDD
HUB-DM2
HUB-DP2
HUB-X1
HUB-X2
HUB-DM3
HUB-DP3
HUB-DM4
HUB-DP4
HUB-RST#
C340 1uF C0402
R208 680R R0402
C336 1uF C0402
C339 1uF C0402
R0402 10K R221
C343 1uF C0402
R210 10K R0402
HUB-3V3
GND
HUB-DP1
HUB-DM1
HUB-3V3
VCC_IO
FB1 600R-100M L0603
C337 10uF C0603
C338 104 C0402
FB4 600R-100M L0603
R244 NC R0402
R206 NC-0R R0402
R209 100K R0402
R207 4K7 R0402
C335 104 C0402
VCC_SYS
R213 22K R0402
R211 47K R0402
OVCUR1#
HUB
R216 NC R0402
Y4
XIN
XOUT
12M-20ppm
CRY-D3225
C342 30pF C0402
C341 30pF C0402
C0805 10uF/10V CE3
USB_HOST JD15
1:5V
2:D-
3:D+
4:GND
5:5V
6:D-
7:D+
8:GND
HOST-PWR
CE9 C0805 10uF/10V
R228 0R R0603
FB7
NC/SDCW2012-2-900
R225 0R R0603
R243 0R R0603
FB8
R230 0R R0603
C0805 10uF/10V CE2
USB_HOST JD14
R73 0R R0603
FB5
R39 0R R0603
R81 0R R0603
FB6
R80 0R R0603
CE8 10uF/10V C0805
Title: RK3288 USB/HSIC Controler
File:
REV: 1.2
Create Date:
Page Num: 2
Modify Date: Wednesday, May 18, 2016
Page Total: 13

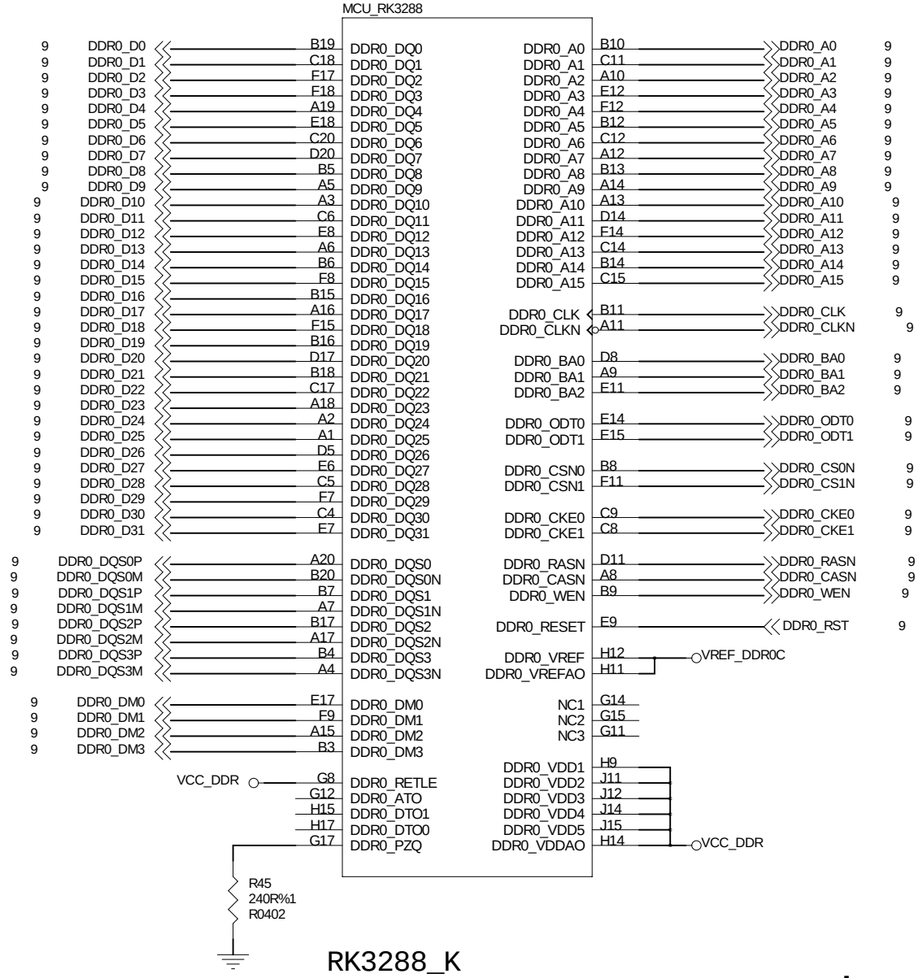

RK3288_K

Channel 0

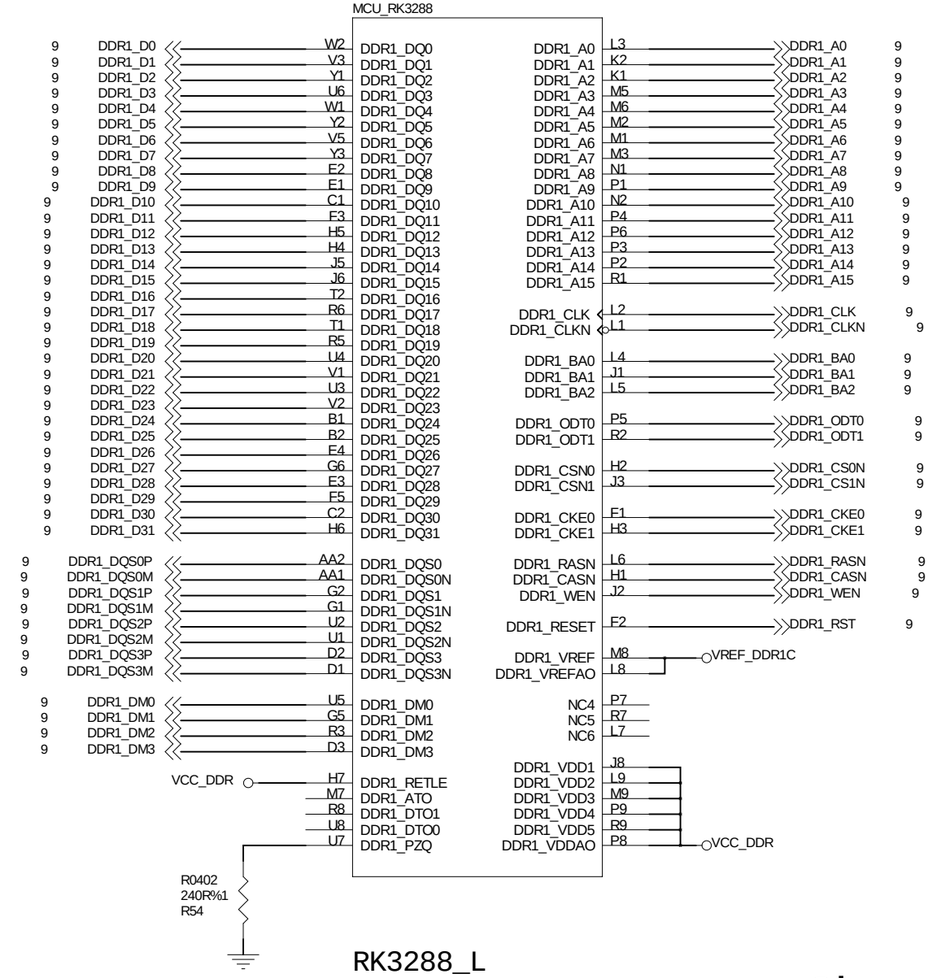

RK3288_L

Channel 1

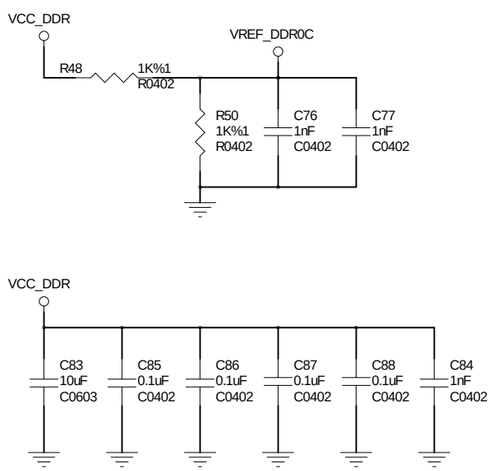

DDR0 FILTER

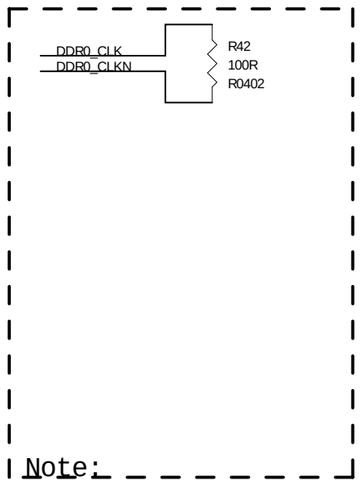

Note:
These termination resistors must be placed
in the middle of trace, and the termination resistor of CLK

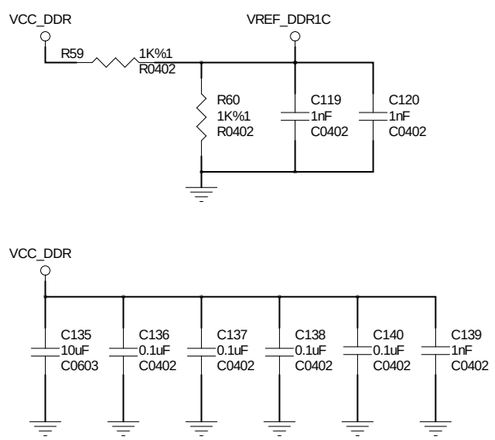

DDR1 FILTER

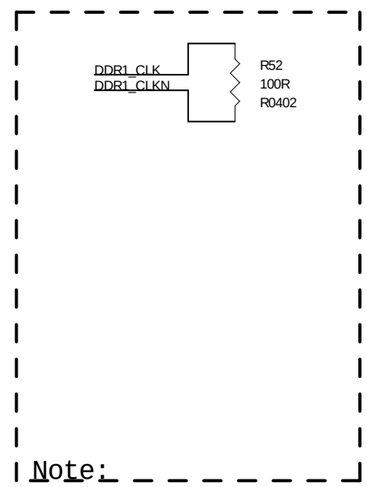

Note:
These termination resistors must be placed
in the middle of trace, and the termination resistor of CLK

Title:	RK3288 RAM Controler	
File:		REV: 1.2
Create Date:		Page Num: 3
Modify Date:	Wednesday, May 18, 2016	Page Total: 13

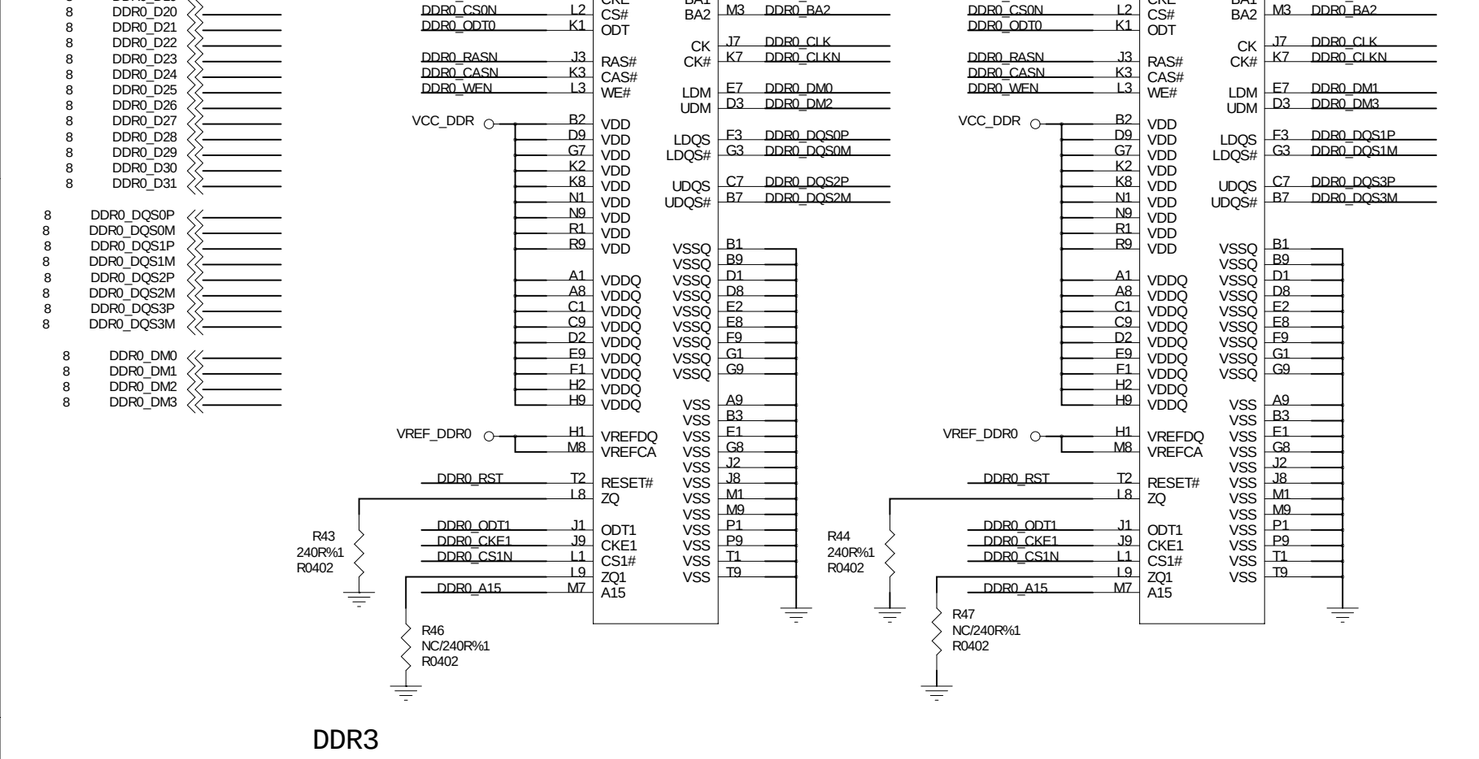

DDR3

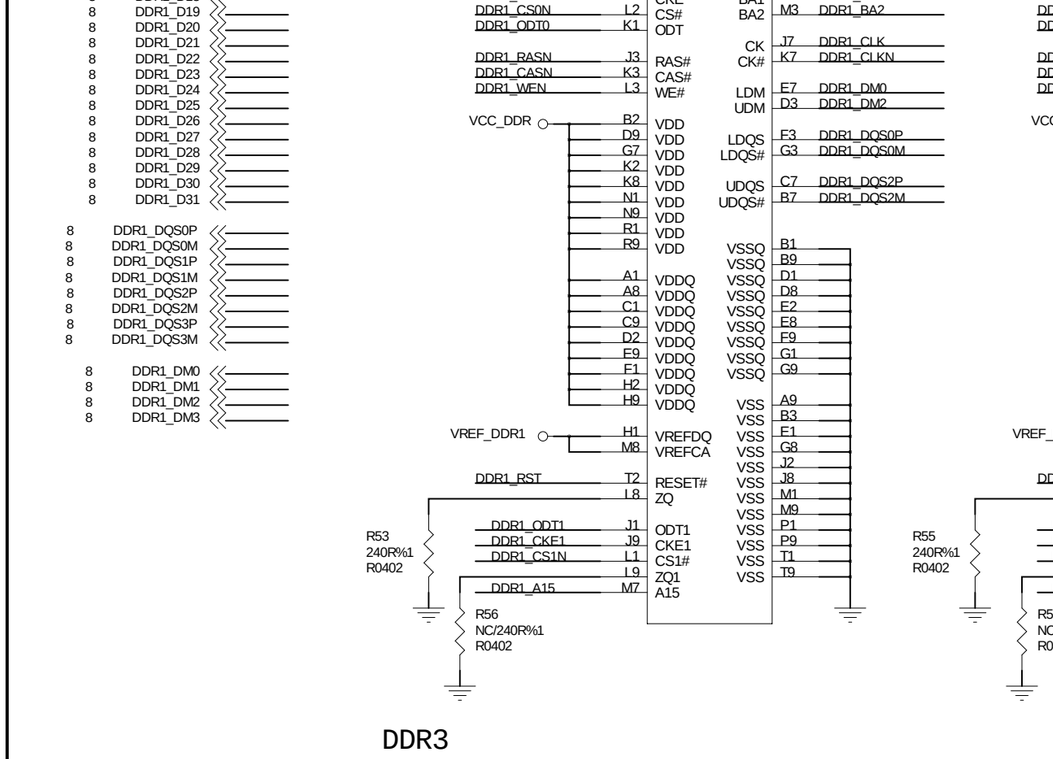

DDR3

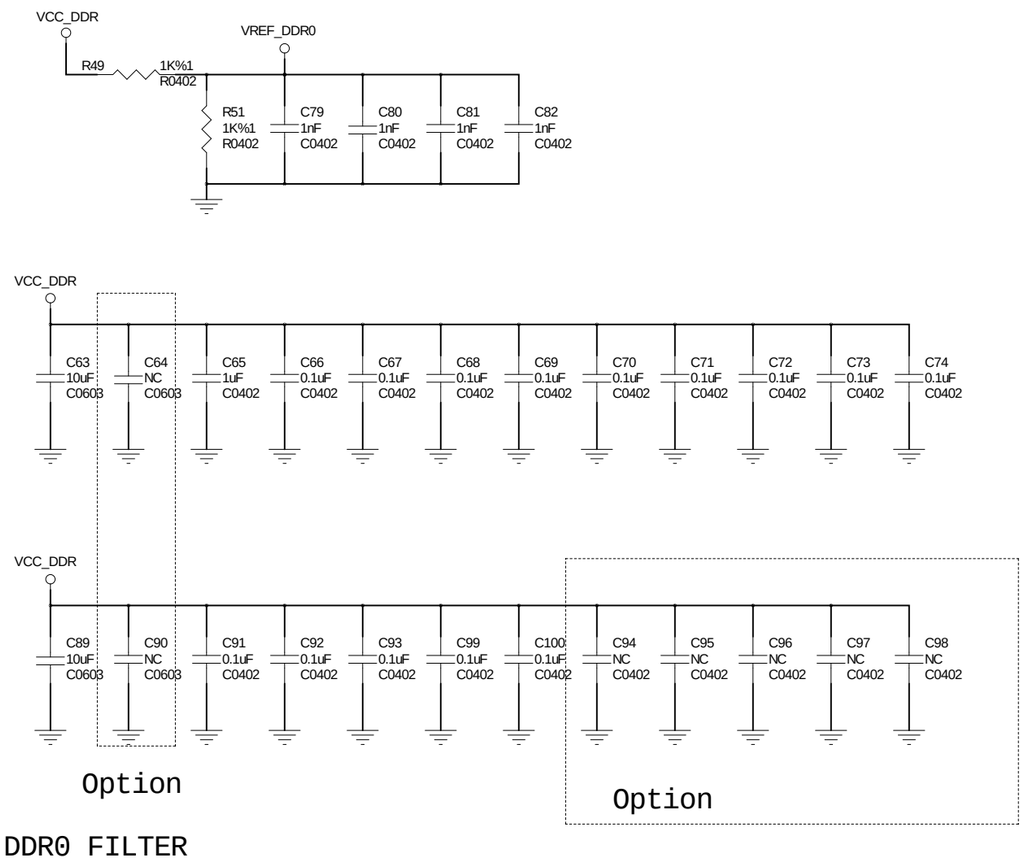

DDR0 FILTER

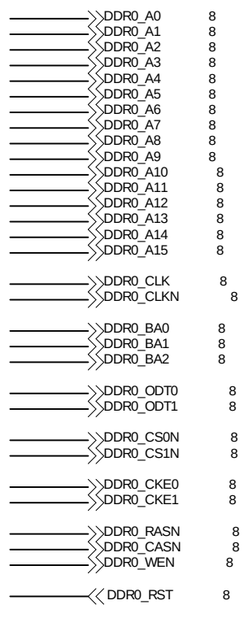

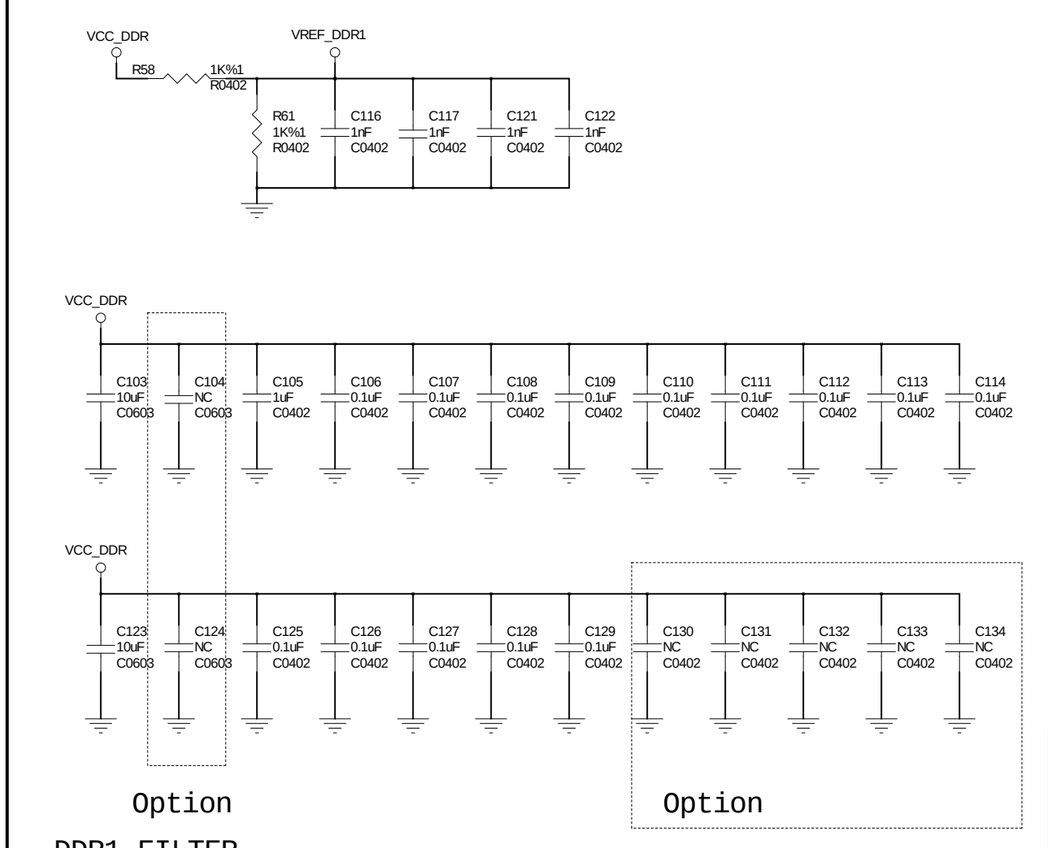

DDR1 FILTER

Title:	
File:	
Create	
Modify	

5 4 3 2

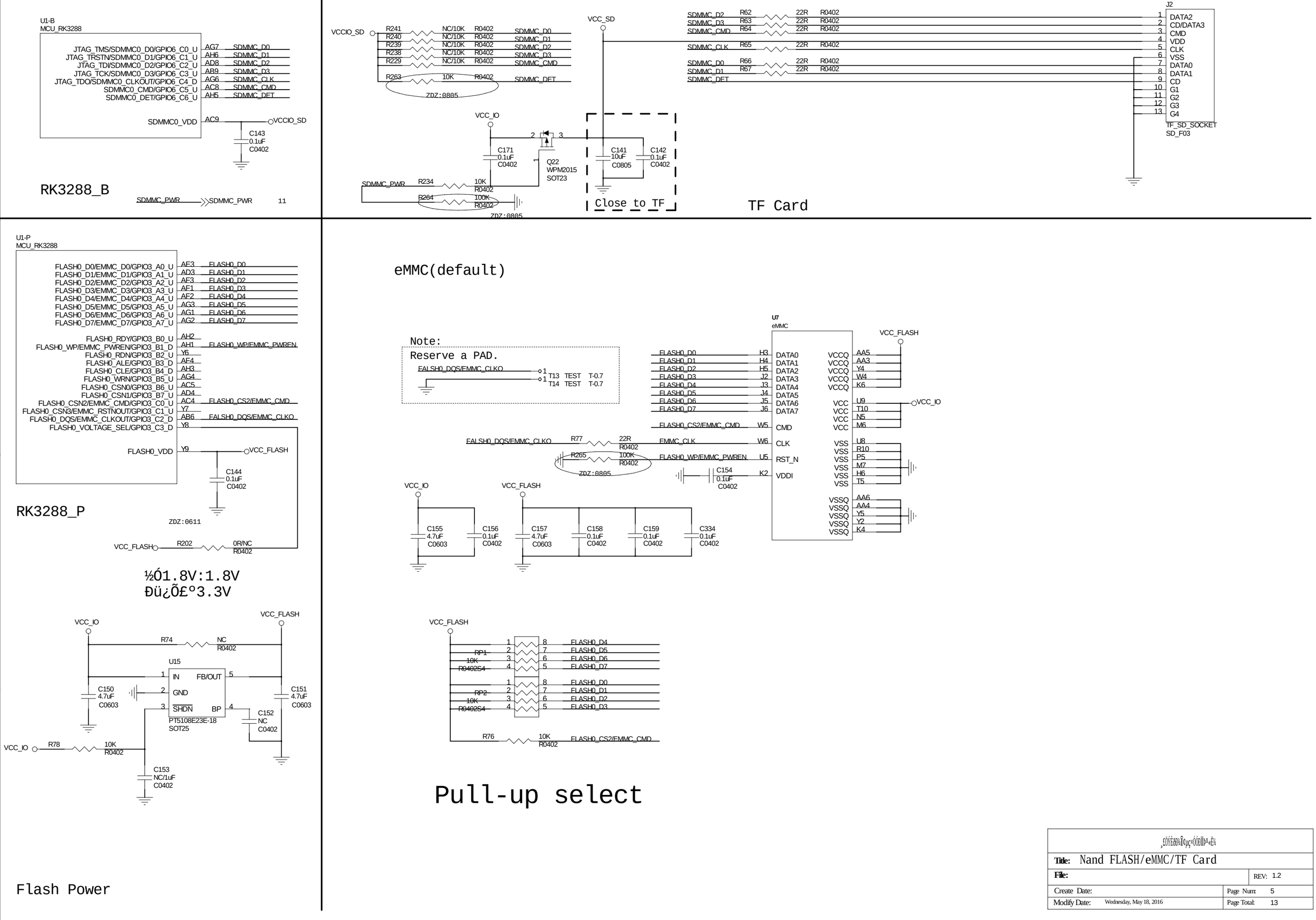

Title: Nand FLASH/eMMC/TF Card		
File:	REV: 1.2	
Create Date:	Page Num: 5	
Modify Date: Wednesday, May 18, 2016	Page Total: 13	

5 4 3 2 1

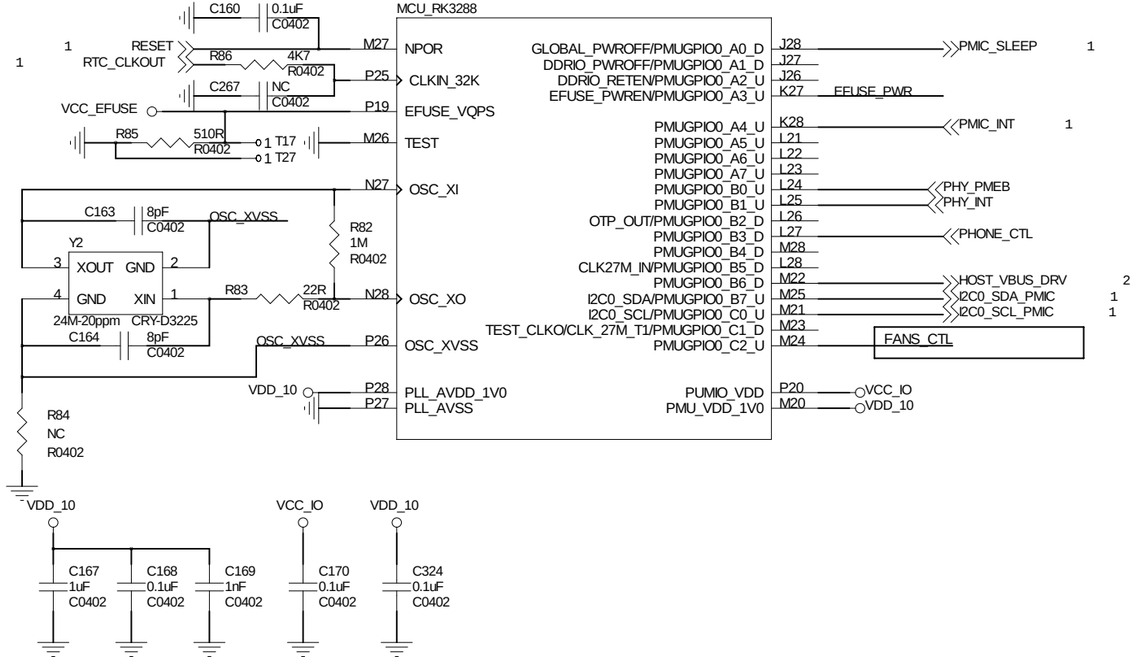

RK3288_D

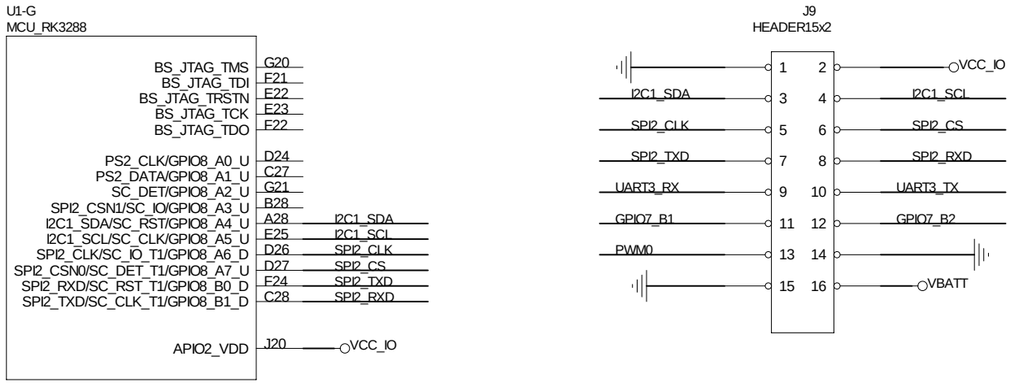

RK3288_G

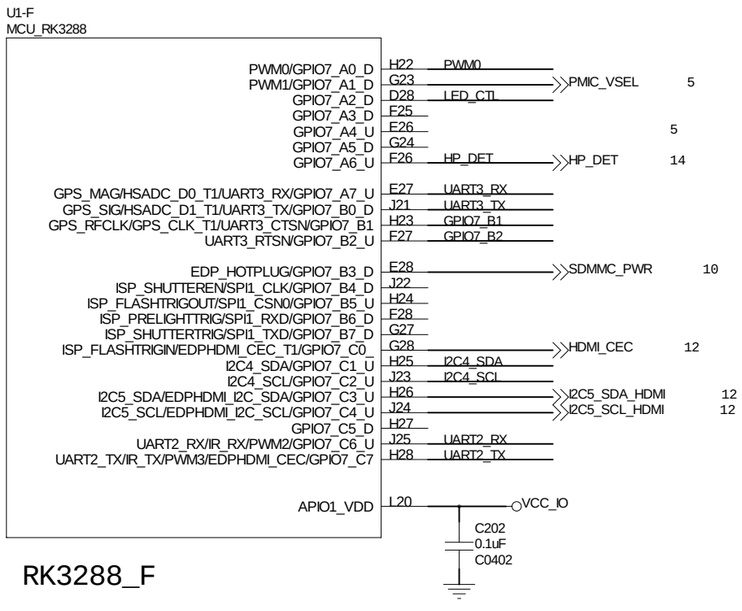

RK3288_F

For debug(Default)

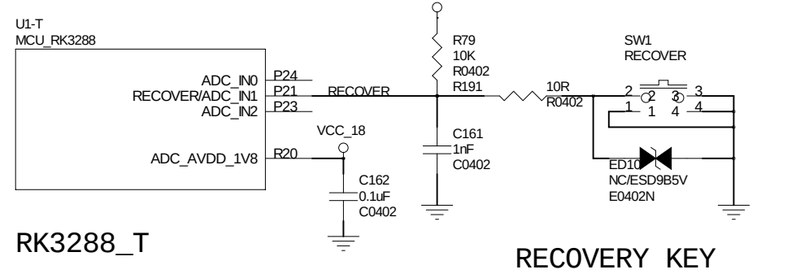

RK3288_T

RECOVERY KEY

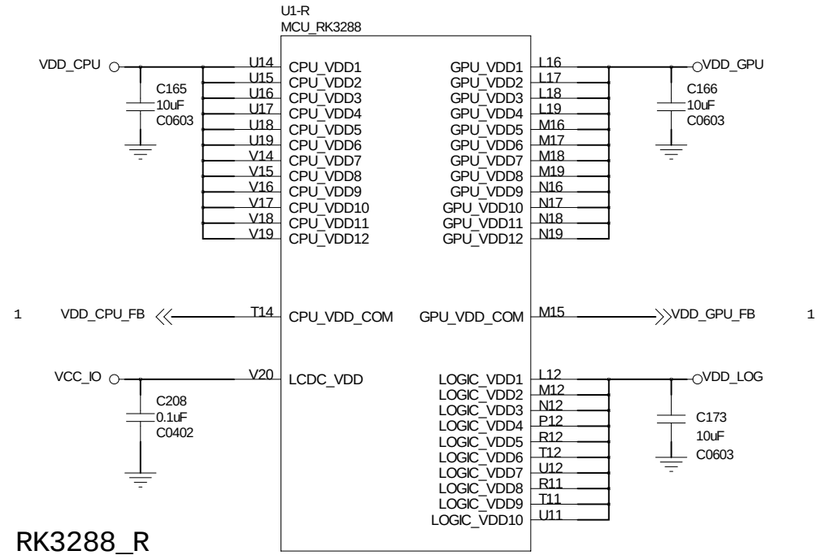

RK3288_R

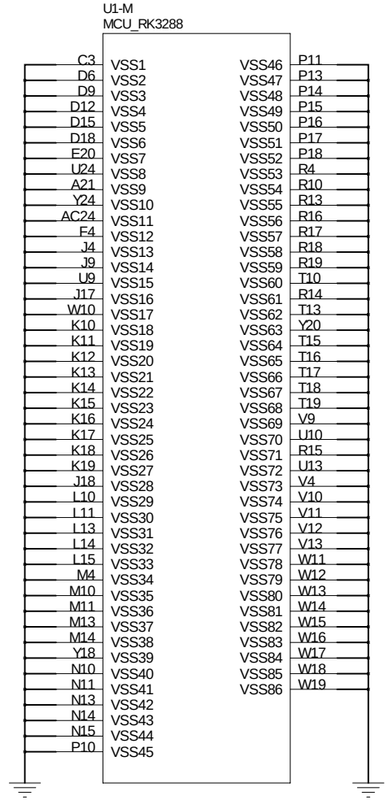

RK3288_M

RK3288 FILTER

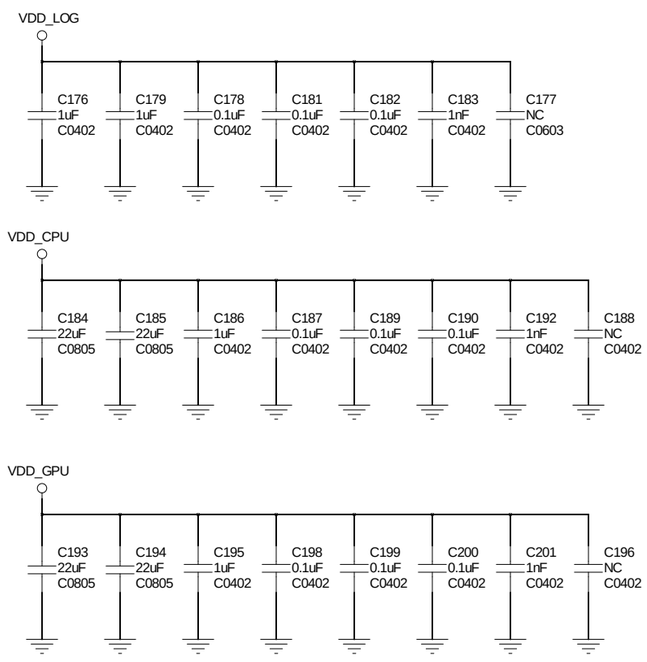

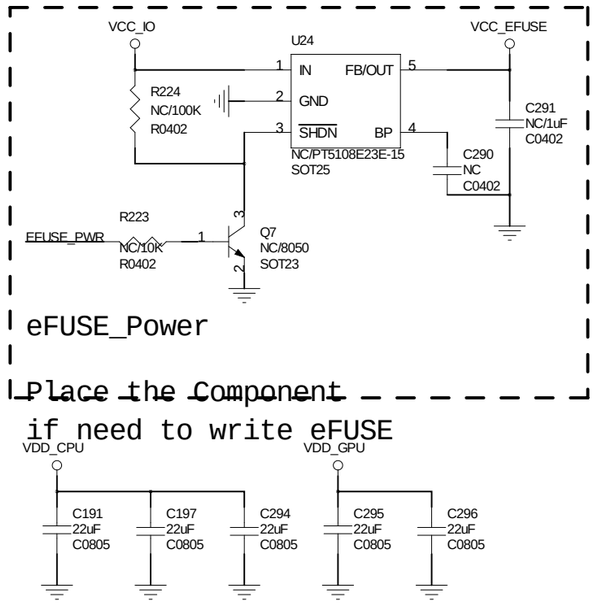

eFUSE_Power

Place the Component if need to write eFUSE

Title: RK3288 GPIO/POWER	
File:	REV: 1.2
Create Date:	Page Num: 6
Modify Date: Wednesday, May 18, 2016	Page Total: 13

5 4 3 2 1

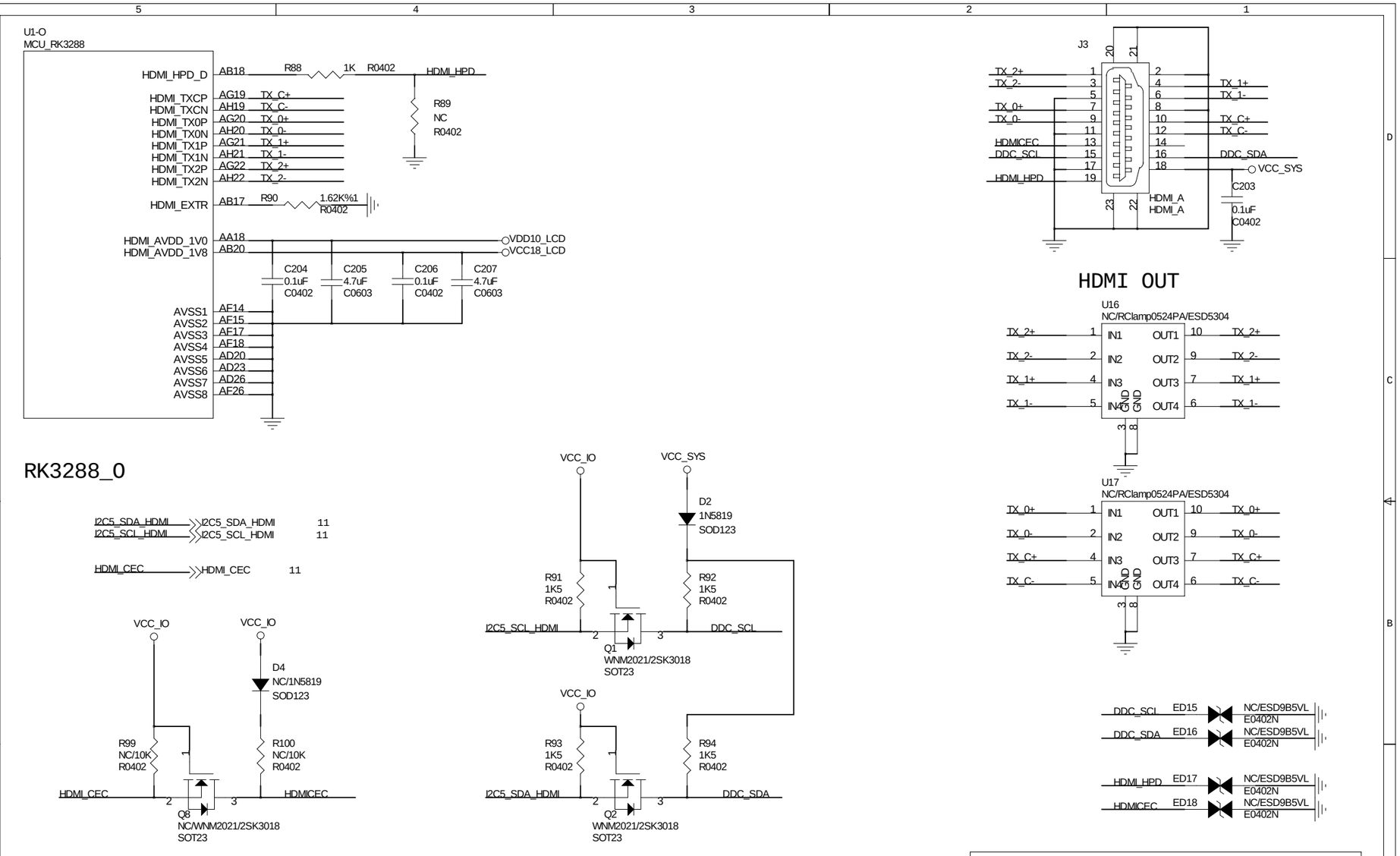

HDMI OUT

RK3288_0

Title: HDMI OUT		
File:	REV: 1.2	
Create Date:	Page Num:	7
Modify Date: Wednesday, May 18, 2016	Page Total:	13

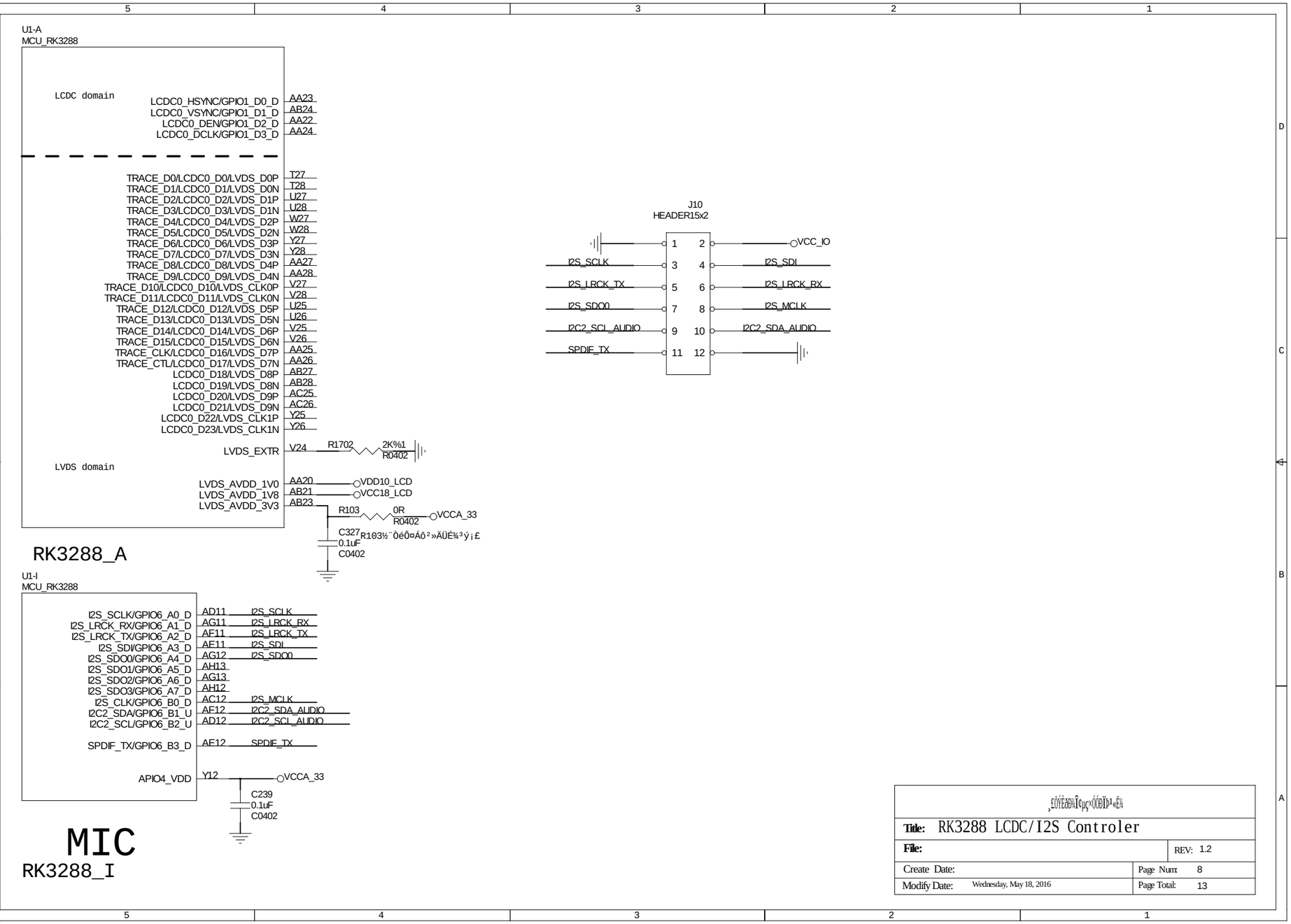

Title: RK3288 LCDC/I2S Controler	
File:	REV: 1.2
Create Date:	Page Num: 8
Modify Date: Wednesday, May 18, 2016	Page Total: 13

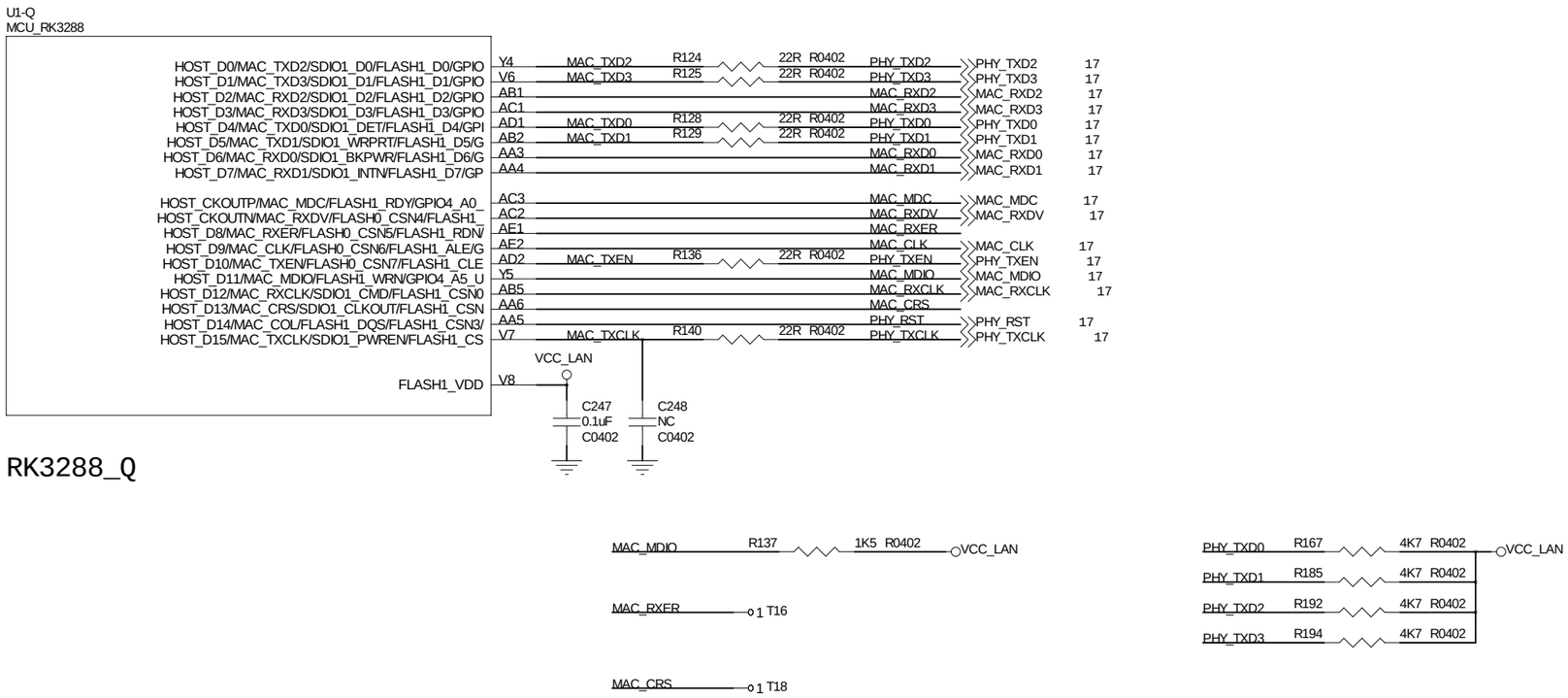

RK3288_Q

¸£ÕÝÉ£ØÞ¾Ïçµ¸×ÓÓÈÏÞ¹«Ê¼		
Title: RK3288 EthernetMAC Controler		
File:	REV: 1.2	
Create Date:	Page Num:	9
Modify Date: Wednesday, May 18, 2016	Page Total:	13

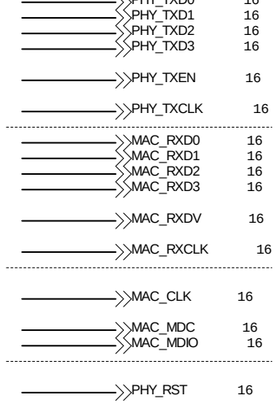

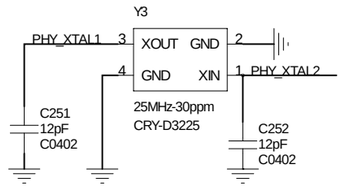

If use external clock
then the XTAL2 need
connect to GND for RTL8211E.

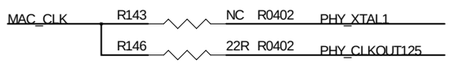

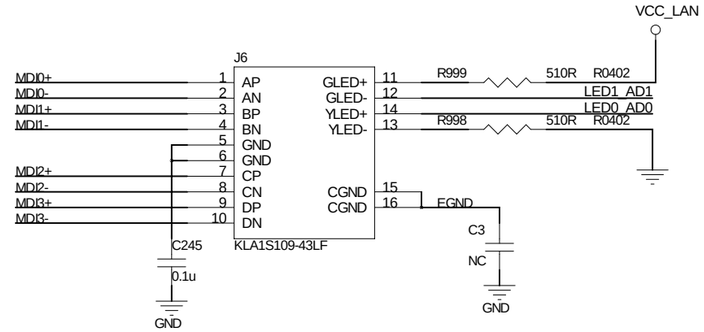

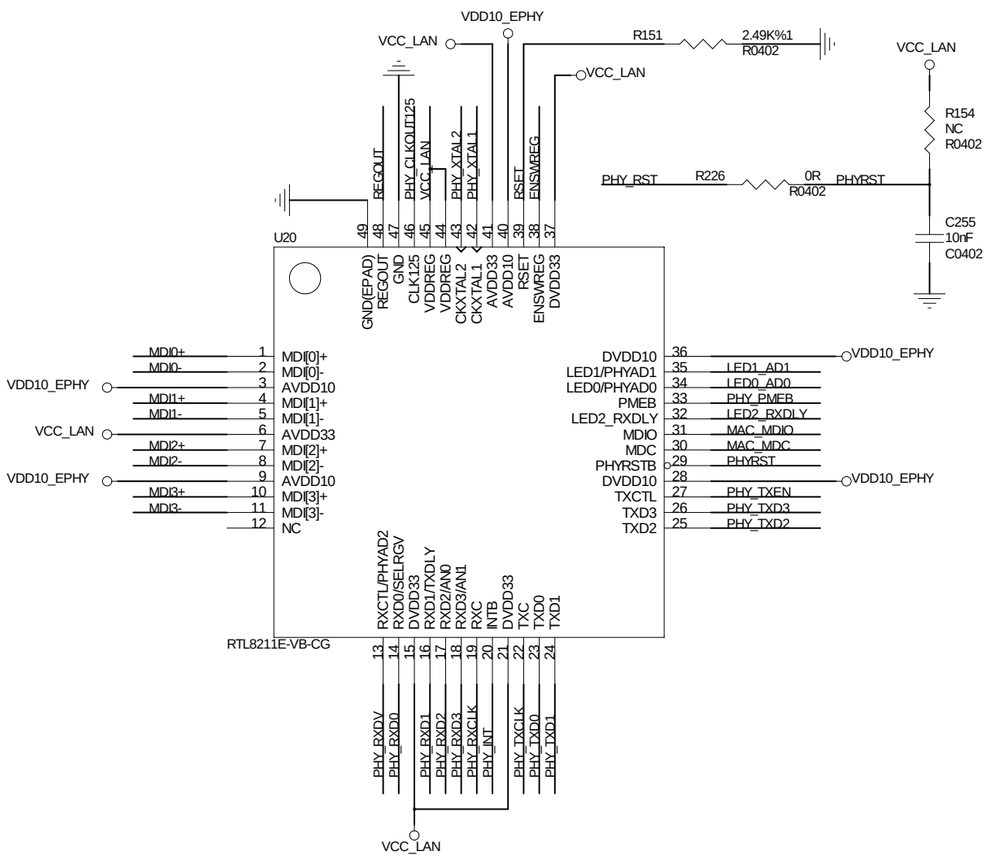

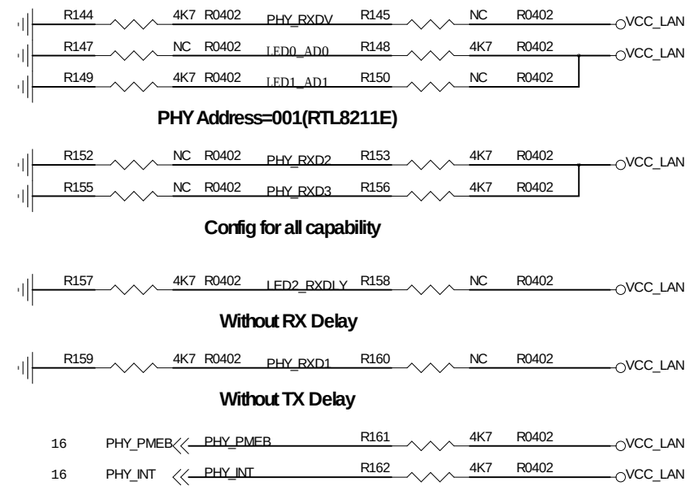

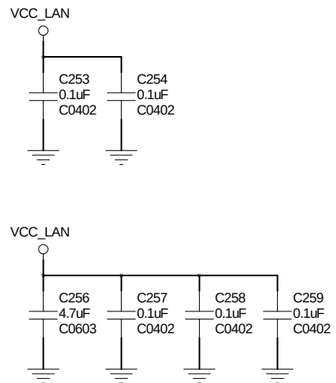

Connect ENSWREG to AVDD33 to enable
Switching regulator or connect ENSWREG
to GND to disable Switching regulator.

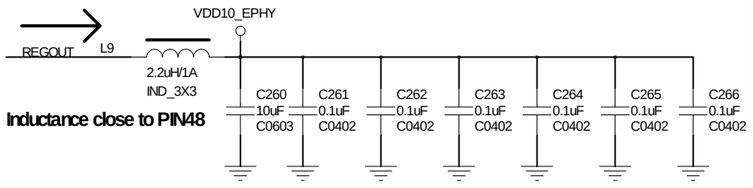

Inductance close to PIN48

Pull down for 2.5V RGMII(RTL8211D/8211E)
Pull up for 3.3V RGMII (RTL8211D/8211E)
Pull up1.5 /1.8V RGMII (RTL8211E-VL only)

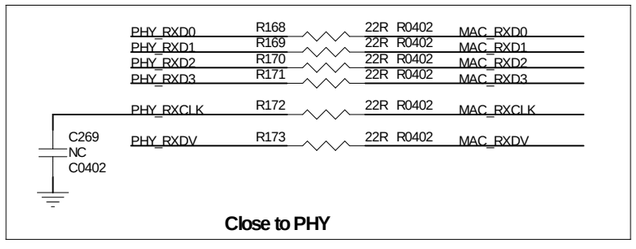

Close to PHY

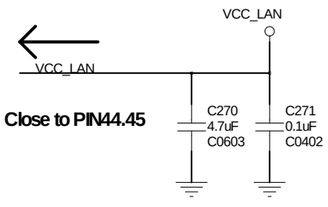

Close to PIN44.45

Title: 10/100/1000M-PHY			
File:		REV: 1.2	
Create Date:		Page Num:	10
Modify Date:	Wednesday, May 18, 2016	Page Total:	13

5 4 3 2 1

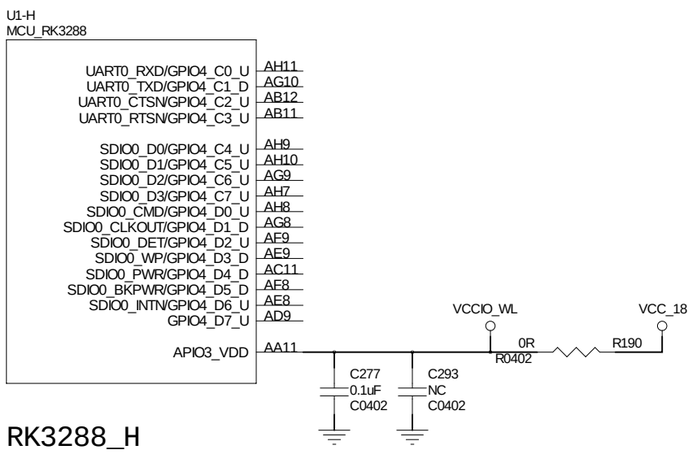

RK3288_H

¸£ÔÎÈÕBÞ¼Î¢µÇ×ÓÓÐÏÏÞ¹«Ê¼	
Title: RK3288 SDIO0 Controler	
File:	REV: 1.2
Create Date:	Page Num: 11
Modify Date: Wednesday, May 18, 2016	Page Total: 13

U1-C
MCU_RK3288

HOST_D0/TS_D0/CIF_D2/GPIO2_A0_D	Y23
HOST_D1/TS_D1/CIF_D3/GPIO2_A1_D	Y21
HOST_D2/TS_D2/CIF_D4/GPIO2_A2_D	Y22
HOST_D3/TS_D3/CIF_D5/GPIO2_A3_D	V21
HOST_CKINP/TS_D4/CIF_D6/GPIO2_A4_D	U22
HOST_CKINN/TS_D5/CIF_D7/GPIO2_A5_D	U21
HOST_D4/TS_D6/CIF_D8/GPIO2_A6_D	U23
HOST_D5/TS_D7/CIF_D9/GPIO2_A7_D	V23
HOST_D6/TS_SYNC/CIF_VSYNC/GPIO2_B0_D	R25
HOST_D7/TS_VALID/CIF_HREF/GPIO2_B1_D	R28
HOST_WKACK/GPS_CLK/TS_CLKOUT/CIF_CLKIN/G	V22
HOST_WKREQ/TS_FAIL/CIF_CLKOUT/GPIO2_B3_D	R22
CIF_D0/GPIO2_B4_D	R27
CIF_D1/GPIO2_B5_D	R26
CIF_D10/GPIO2_B6_D	R24
CIF_D11/GPIO2_B7_D	R21
I2C3_SCL/GPIO2_C0_U	P22
I2C3_SDA/GPIO2_C1_U	R23
DVPIO_VDD	U20

RK3288_C

U1-W
MCU_RK3288

MIPI_RX_D0P	AG23
MIPI_RX_D0N	AH23
MIPI_RX_D1P	AG24
MIPI_RX_D1N	AH24
MIPI_RX_CLKP	AG25
MIPI_RX_CLKN	AH25
MIPI_RX_D2P	AG26
MIPI_RX_D2N	AH26
MIPI_RX_D3P	AH28
MIPI_RX_D3N	AH27
MIPI_RX_REXT	AD21
MIPI_RX_AVDD_1V8	AC20

RK3288_W

U1-X
MCU_RK3288

MIPI_TX/RX_D0P	AE20
MIPI_TX/RX_D0N	AF20
MIPI_TX/RX_D1P	AE21
MIPI_TX/RX_D1N	AF21
MIPI_TX/RX_CLKP	AE23
MIPI_TX/RX_CLKN	AF23
MIPI_TX/RX_D2P	AE24
MIPI_TX/RX_D2N	AF24
MIPI_TX/RX_D3P	AF25
MIPI_TX/RX_D3N	AD25
MIPI_TX/RX_REXT	AD22
MIPI_TX/RX_AVDD_1V8	AC21

RK3288_X

U1-N
MCU_RK3288

EDP_TP_OUT/SATA_EXTR	AA12
EDP_CLK24M_IN/MIPI_LLI_EXTR	AC17
EDP_TX0P	AG14
EDP_TX0N	AH14
EDP_TX1P	AG15
EDP_TX1N	AH15
EDP_TX2P	AG16
EDP_TX2N	AH16
EDP_TX3P	AG17
EDP_TX3N	AH17
EDP_AXUP	AG18
EDP_AXUN	AH18
EDP_EXTR	AC18
EDP_AVDD_1V0	Y17
EDP_AVDD_1V8	AA17

RK3288_N

U1-V
MCU_RK3288

MIPI_TX_D0P	AG27
MIPI_TX_D0N	AG28
MIPI_TX_D1P	AF27
MIPI_TX_D1N	AF28
MIPI_TX_CLKP	AE27
MIPI_TX_CLKN	AE28
MIPI_TX_D2P	AD27
MIPI_TX_D2N	AD28
MIPI_TX_D3P	AC27
MIPI_TX_D3N	AC28
MIPI_TX_REXT	AE26
MIPI_TX_AVDD_1V8	AC22

RK3288_V

¸£ÛÝÈ£ÐÞ¼Ïé¢µÇ×ÓÚÐÏÞ¹«È¼		
Title: Camera Interface		
File:	REV: 1.2	
Create Date:	Page Num:	12
Modify Date: Wednesday, May 18, 2016	Page Total:	13

5 4 3 2 1

U1-J
MCU_RK3288

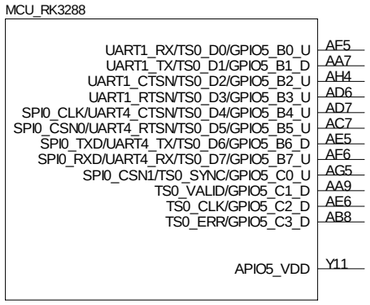

RK3288_J

¸£ÔÝÉ©Ð¾Ì¢µÇ×ÓÓÐÏÞ¹«Ê¼		
Title: DTV-(Reserve)		
File:	REV: 1.2	
Create Date:	Page Num:	13
Modify Date: Wednesday, May 18, 2016	Page Total:	13