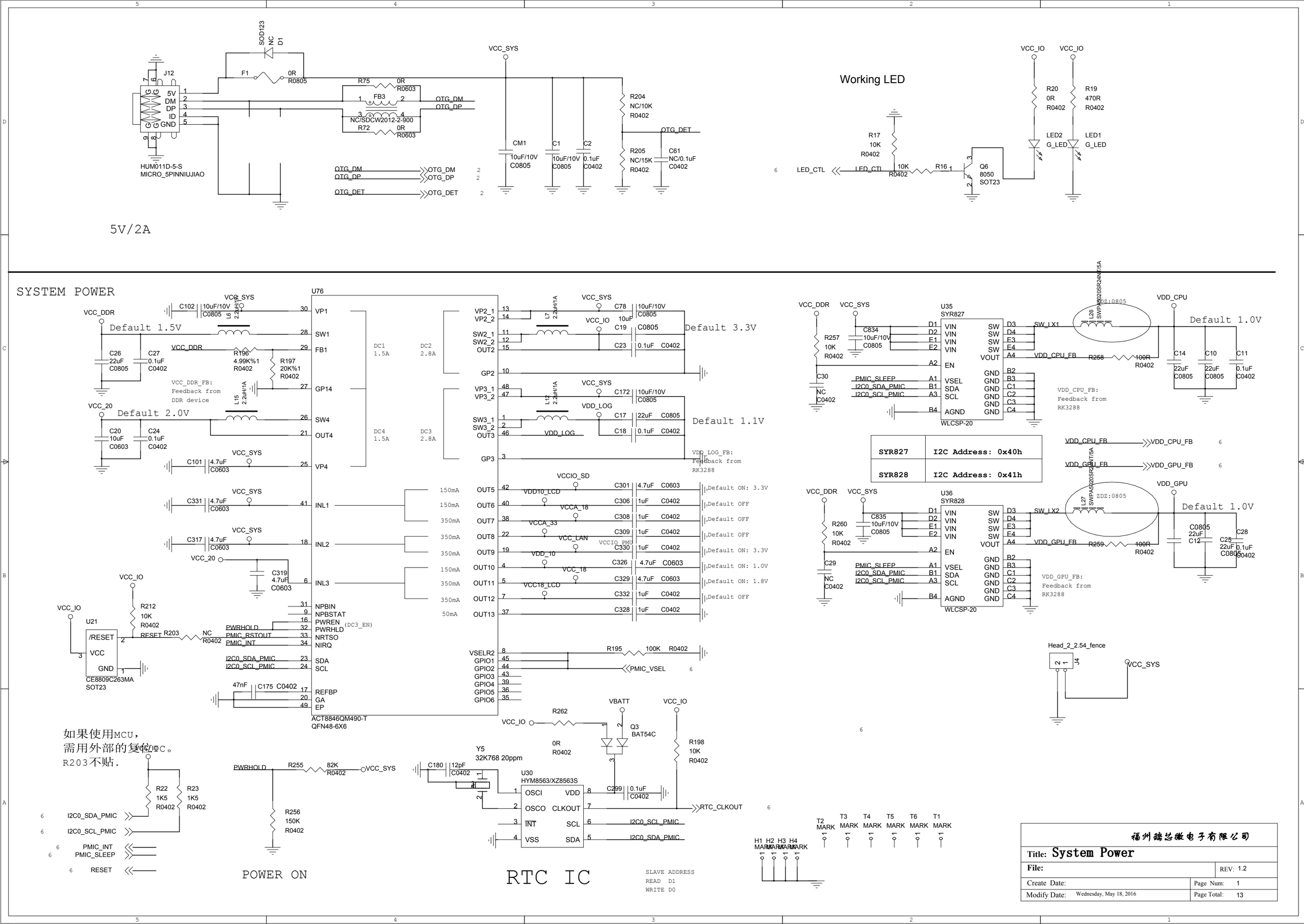
5V/2A
J12
HUM011D-5-S
MICRO_5PINNIUJIAO
SOD123
NC
D1
F1
0R
R0805
R75
0R
R0603
FB3
NC/SDCW2012-2-900
R72
0R
R0603
OTG_DM
OTG_DP
OTG_DET
VCC_SYS
CM1
10uF/10V
C0805
C1
10uF/10V
C0805
C2
0.1uF
C0402
R204
NC/10K
R0402
R205
NC/15K
R0402
C61
NC/0.1uF
C0402
Working LED
VCC_IO
R20
0R
R0402
R19
470R
R0402
LED2
G_LED
LED1
G_LED
R17
10K
R0402
LED_CTL
10K
R0402
R16
Q6
8050
SOT23
SYSTEM POWER
U76
VCC_DDR
Default 1.5V
C102
10uF/10V
C0805
L6
2.2uH/1A
VP1
SW1
FB1
C26
22uF
C0805
C27
0.1uF
C0402
R196
4.99K%1
R0402
R197
20K%1
R0402
VCC_DDR_FB:
Feedback from
DDR device
L15
2.2uH/1A
GP14
VCC_20
Default 2.0V
C20
10uF
C0603
C24
0.1uF
C0402
SW4
OUT4
C101
4.7uF
C0603
VP4
DC1
1.5A
DC2
2.8A
DC4
1.5A
DC3
2.8A
VP2_1
VP2_2
SW2_1
SW2_2
OUT2
GP2
L7
2.2uH/1A
C78
10uF/10V
C0805
VCC_IO
10uF
C19
C0805
C23
0.1uF
C0402
Default 3.3V
VP3_1
VP3_2
SW3_1
SW3_2
OUT3
GP3
L12
2.2uH/1A
C172
10uF/10V
C0805
VDD_LOG
C17
22uF
C0805
C18
0.1uF
C0402
Default 1.1V
VDD_LOG_FB:
Feedback from
RK3288
C331
4.7uF
C0603
INL1
C317
4.7uF
C0603
INL2
C319
4.7uF
C0603
INL3
150mA
OUT5
150mA
OUT6
350mA
OUT7
350mA
OUT8
350mA
OUT9
150mA
OUT10
350mA
OUT11
350mA
OUT12
50mA
OUT13
VCCIO_SD
VDD10_LCD
VCCA_18
VCCA_33
VCC_LAN
VCCIO_PMU
VDD_10
VCC_18
VCC18_LCD
C301
4.7uF
C0603
C306
1uF
C0402
C308
1uF
C0402
C309
1uF
C0402
C330
1uF
C0402
C326
4.7uF
C0603
C329
4.7uF
C0603
C332
1uF
C0402
C328
1uF
C0402
Default ON: 3.3V
Default OFF
Default OFF
Default OFF
Default ON: 3.3V
Default ON: 1.0V
Default ON: 1.8V
Default OFF
NPBIN
NPBSTAT
PWREN
(DC3_EN)
PWRHLD
NRTSO
NIRQ
SDA
SCL
REFBP
GA
EP
PWRHOLD
PMIC_RSTOUT
PMIC_INT
I2C0_SDA_PMIC
I2C0_SCL_PMIC
47nF
C175
C0402
ACT8846QM490-T
QFN48-6X6
VSELR2
GPIO1
GPIO2
GPIO3
GPIO4
GPIO5
GPIO6
R195
100K
R0402
PMIC_VSEL
VCC_IO
R212
10K
R0402
U21
/RESET
VCC
GND
CE8809C263MA
SOT23
RESET
R203
NC
R0402
VCC_DDR
VCC_SYS
R257
10K
R0402
C834
10uF/10V
C0805
C30
NC
C0402
U35
SYR827
VIN
VIN
VIN
VIN
EN
VSEL
SDA
SCL
AGND
SW
SW
SW
SW
VOUT
GND
WLCSP-20
PMIC_SLEEP
I2C0_SDA_PMIC
I2C0_SCL_PMIC
SW_LX1
L26
SWPA5020S2R2NT/5A
ZDZ:0805
VDD_CPU
Default 1.0V
VDD_CPU_FB
R258
100R
R0402
C14
22uF
C0805
C10
22uF
C0805
C11
0.1uF
C0402
VDD_CPU_FB:
Feedback from
RK3288
SYR827 | I2C Address: 0x40h
SYR828 | I2C Address: 0x41h
VDD_CPU_FB
VDD_GPU_FB
VCC_DDR
VCC_SYS
R260
10K
R0402
C835
10uF/10V
C0805
C29
NC
C0402
U36
SYR828
VIN
VIN
VIN
VIN
EN
VSEL
SDA
SCL
AGND
SW
SW
SW
SW
VOUT
GND
WLCSP-20
PMIC_SLEEP
I2C0_SDA_PMIC
I2C0_SCL_PMIC
SW_LX2
L27
SWPA5020S2R2NT/5A
ZDZ:0805
VDD_GPU
Default 1.0V
VDD_GPU_FB
R259
100R
R0402
C0805
22uF
C12
C25
22uF
C0805
C28
0.1uF
C0402
VDD_GPU_FB:
Feedback from
RK3288
Head_2_2.54_fence
J4
VCC_SYS
如果使用MCU，
需用外部的复位IC。
R203不贴.
R22
1K5
R0402
R23
1K5
R0402
I2C0_SDA_PMIC
I2C0_SCL_PMIC
PMIC_INT
PMIC_SLEEP
RESET
PWRHOLD
R255
82K
R0402
VCC_SYS
R256
150K
R0402
POWER ON
Y5
32K768 20ppm
C180
12pF
C0402
U30
HYM8563/XZ8563S
OSCI
OSCO
INT
VSS
VDD
CLKOUT
SCL
SDA
C299
0.1uF
C0402
RTC_CLKOUT
I2C0_SCL_PMIC
I2C0_SDA_PMIC
RTC IC
SLAVE ADDRESS
READ D1
WRITE D0
R262
0R
R0402
VBATT
Q3
BAT54C
R198
10K
R0402
H1 MARK
H2 MARK
H3 MARK
H4 MARK
T2 MARK
T3 MARK
T4 MARK
T5 MARK
T6 MARK
T1 MARK
福州瑞达微电子有限公司
Title: System Power
File:
REV: 1.2
Create Date:
Page Num: 1
Modify Date: Wednesday, May 18, 2016
Page Total: 13

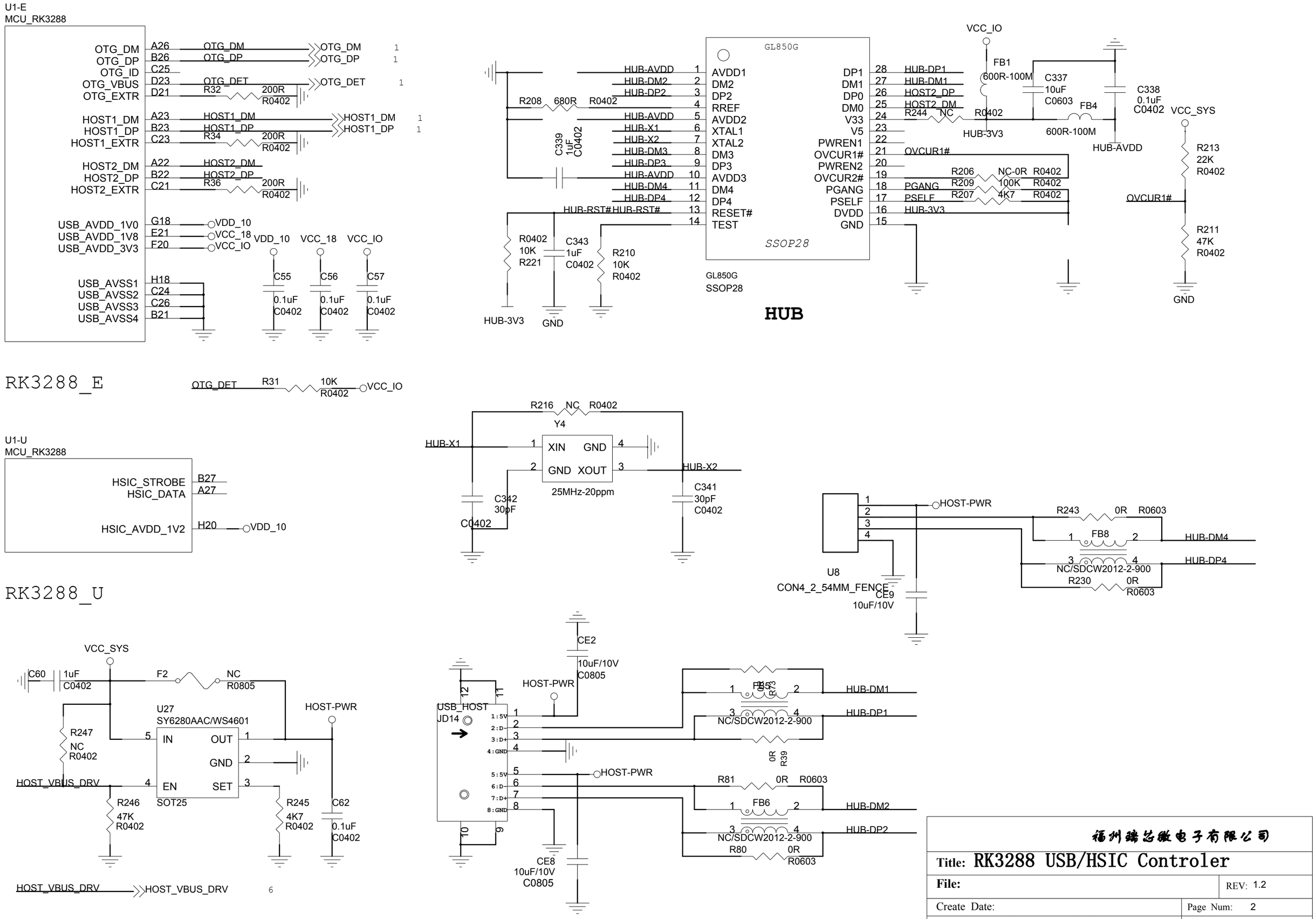

福州瑞芯微电子有限公司	
Title: RK3288 USB/HSIC Controler	
File:	REV: 1.2
Create Date:	Page Num: 2
Modify Date: Wednesday, May 18, 2016	Page Total: 13

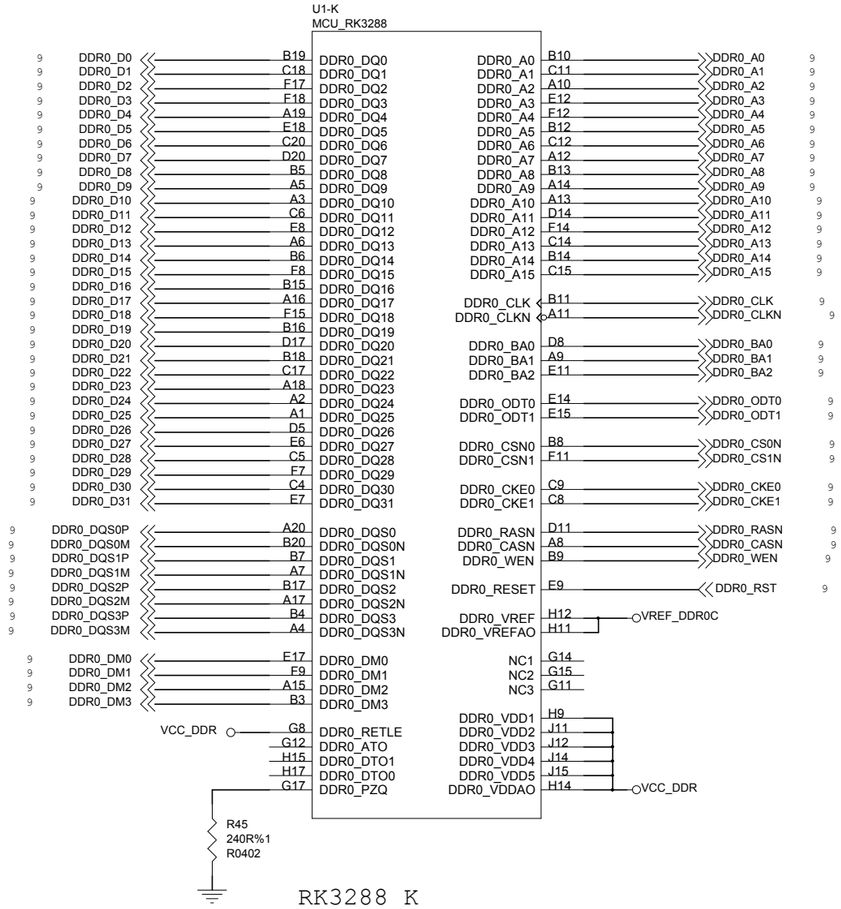

RK3288_K

Channel 0

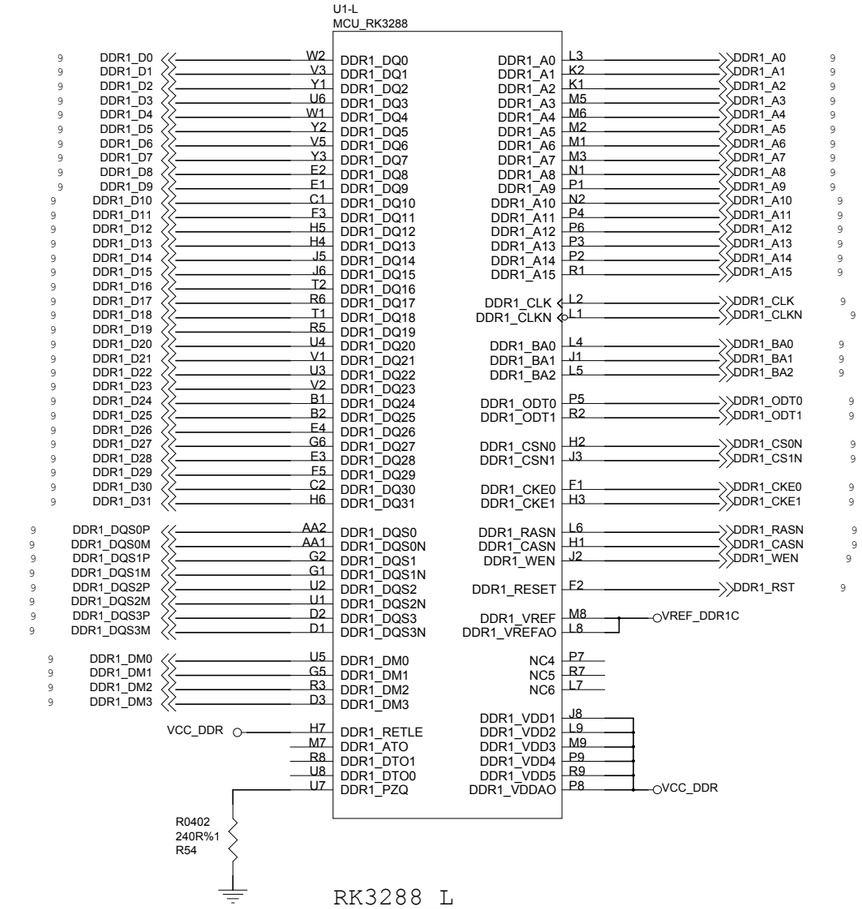

RK3288_L

Channel 1

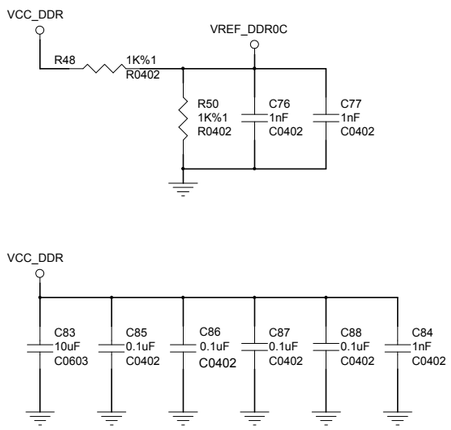

DDR0 FILTER

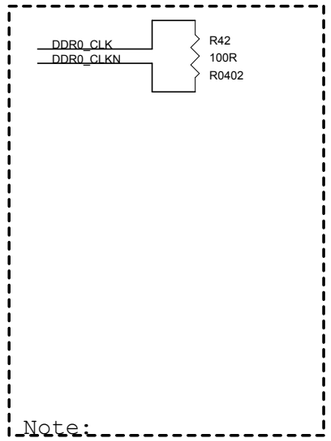

Note:
These termination resistors must be placed
in the middle of trace, and the termination resistor of CLK must be placed in thebifurcation point.

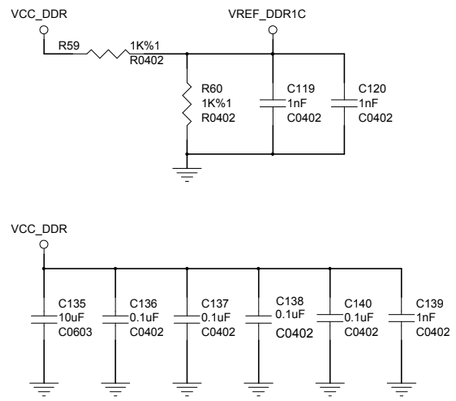

DDR1 FILTER

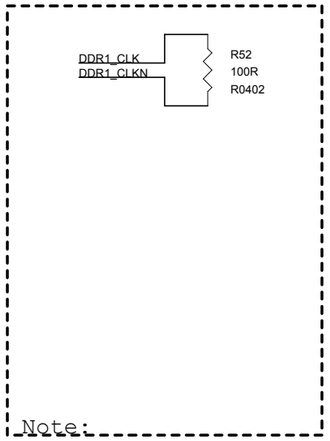

Note:
These termination resistors must be placed
in the middle of trace, and the termination resistor of CLK must be placed in thebifurcation point.

	福州瑞芯微电子有限公司	
Title:	RK3288 RAM Controler	
File:		REV: 1.2
Create Date:		Page Num: 3
Modify Date:	Wednesday, May 18, 2016	Page Total: 13

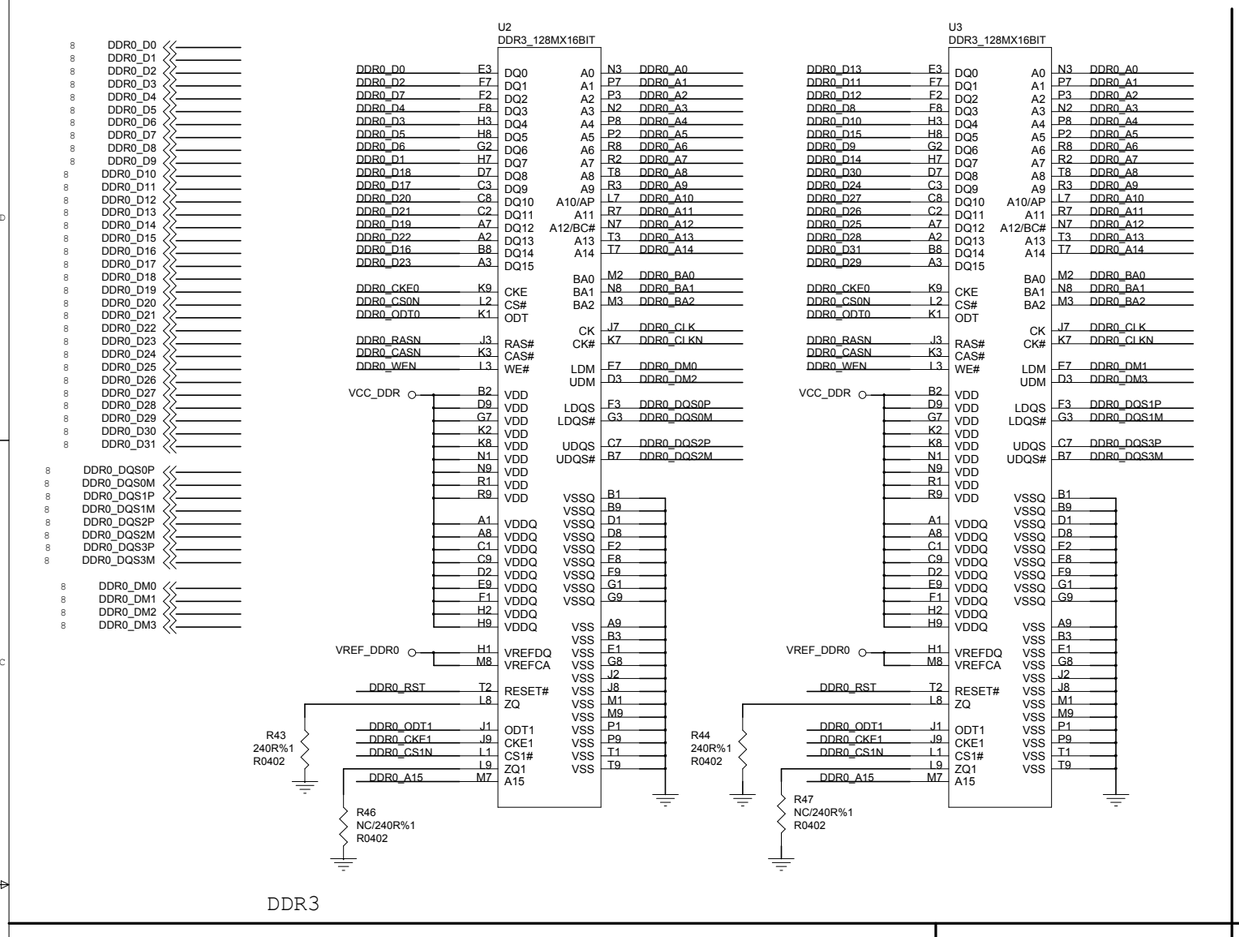

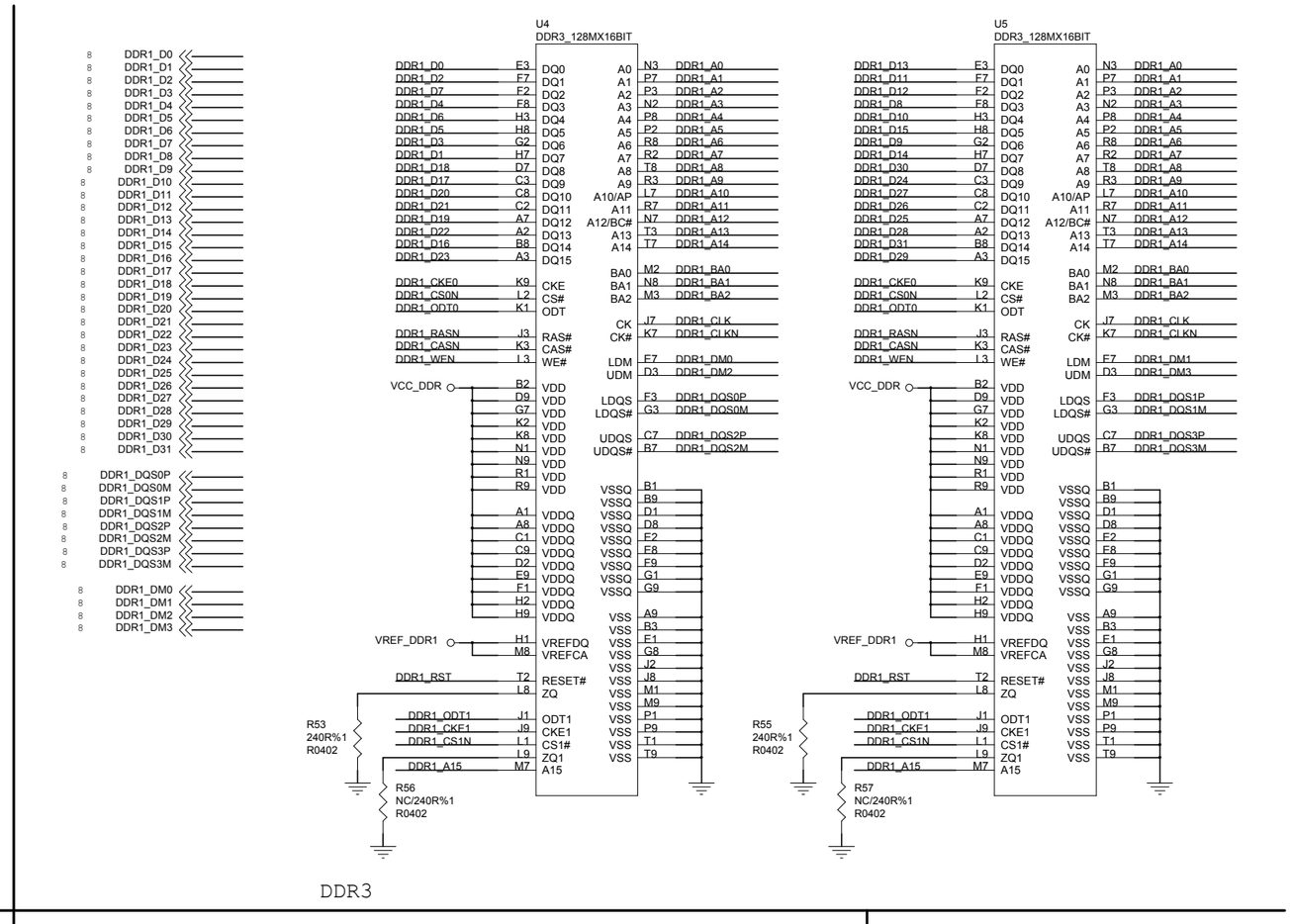

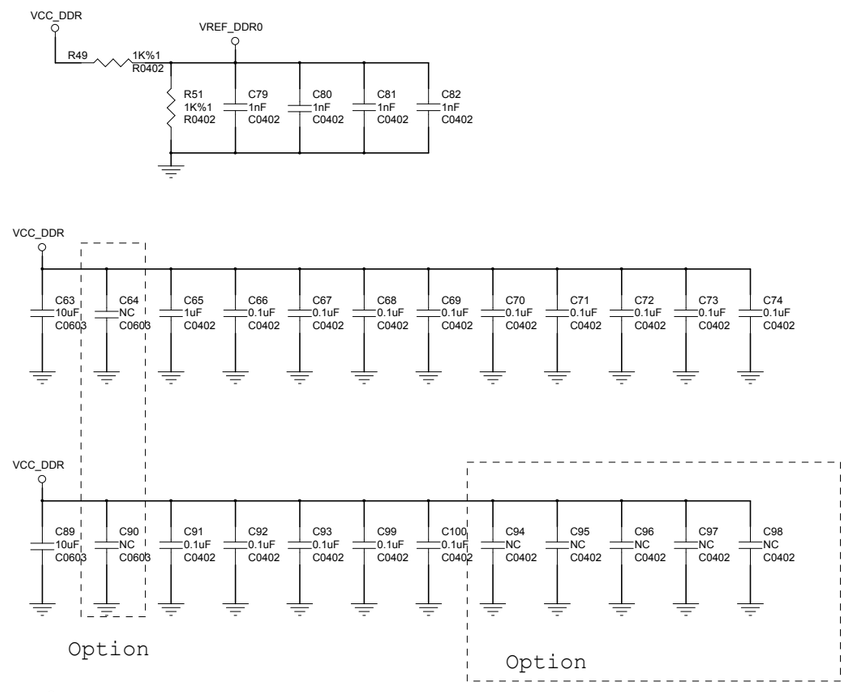

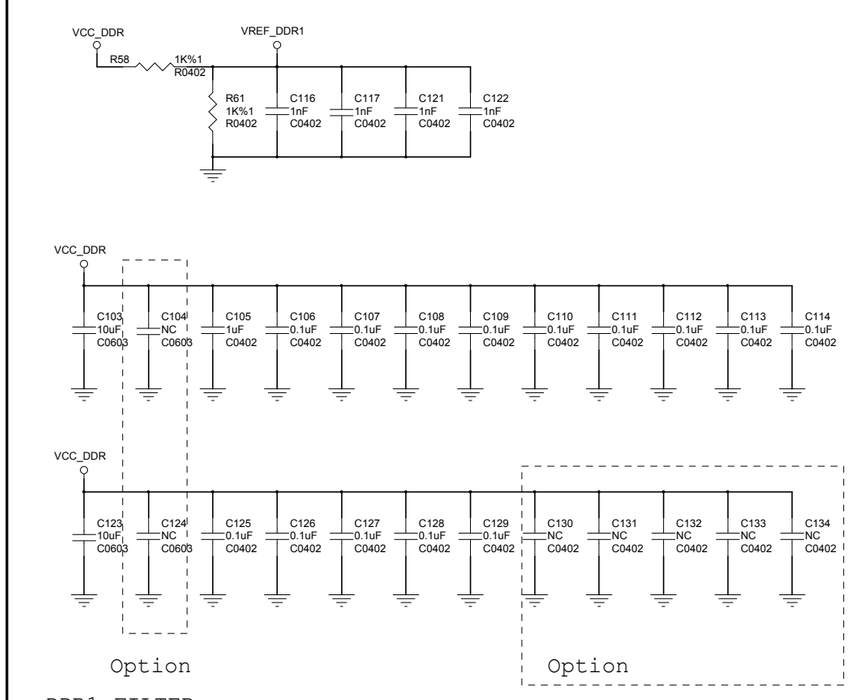

福州瑞芯微电子有限公司	
Title: RAM-DDR3-4X16bit	
File:	REV: 1.2
Create Date:	Page Num: 4
Modify Date: Wednesday, May 18, 2016	Page Total: 13

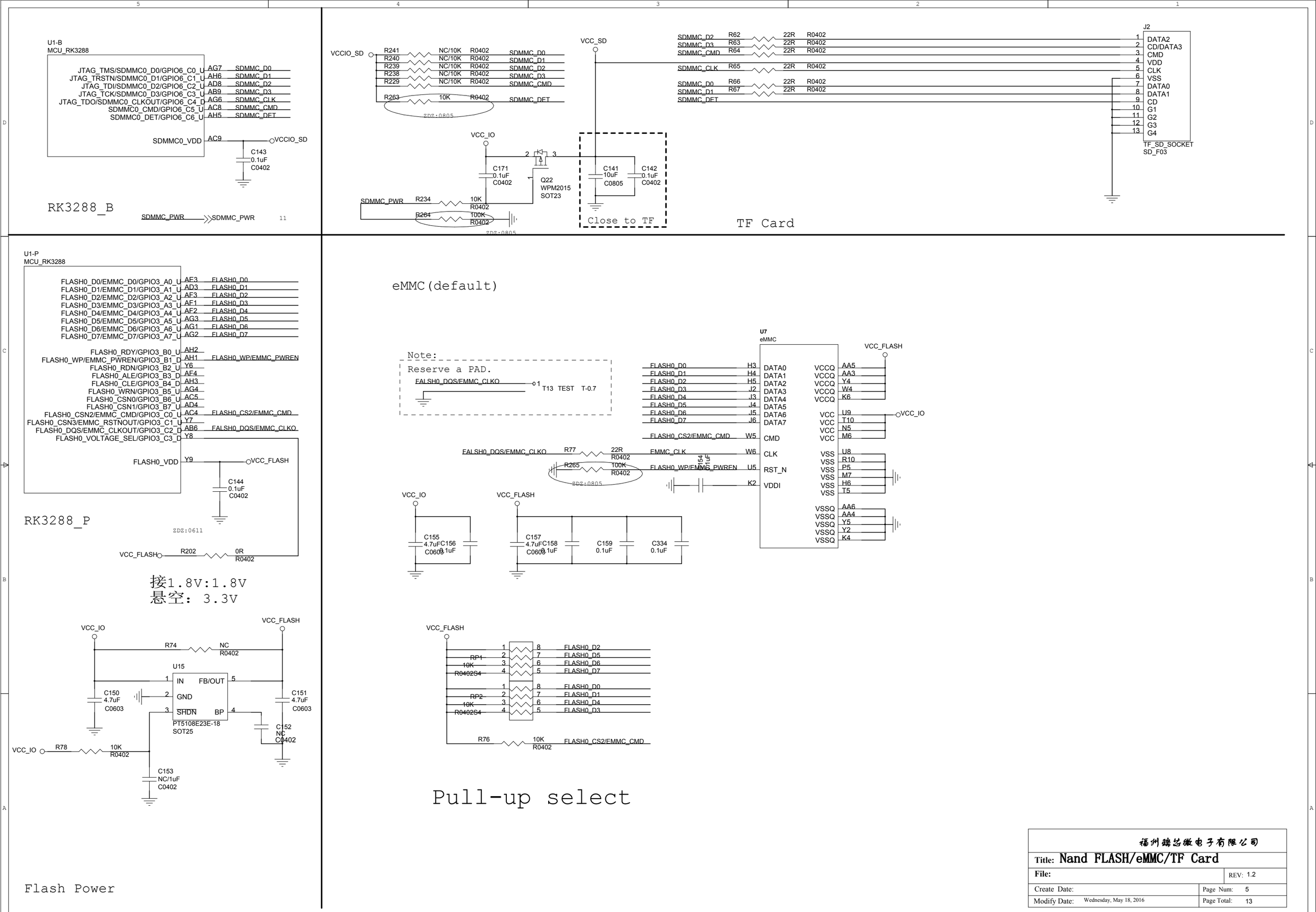

福州瑞芯微电子有限公司	
Title: Nand FLASH/eMMC/TF Card	
File:	REV: 1.2
Create Date:	Page Num: 5
Modify Date: Wednesday, May 18, 2016	Page Total: 13

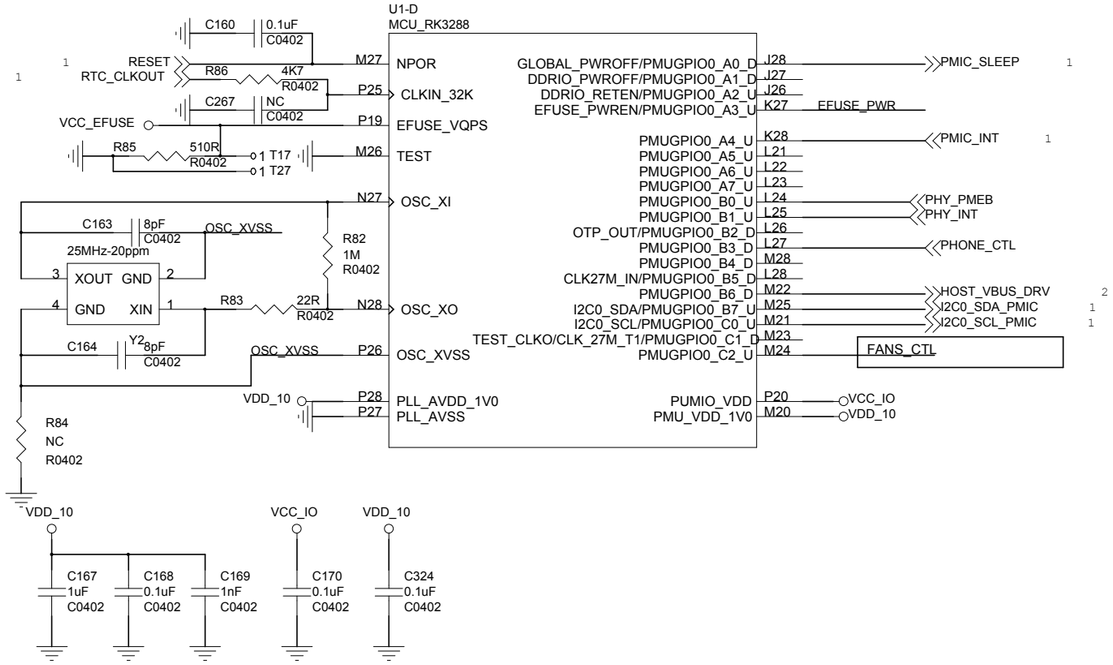

RK3288_D

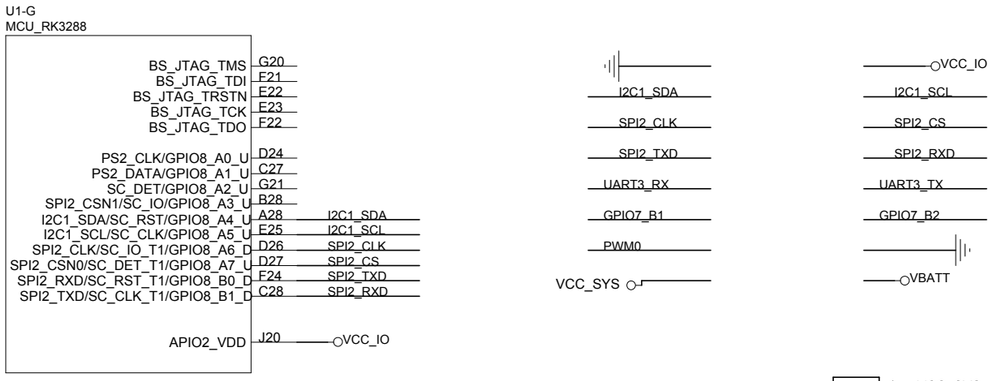

RK3288_G

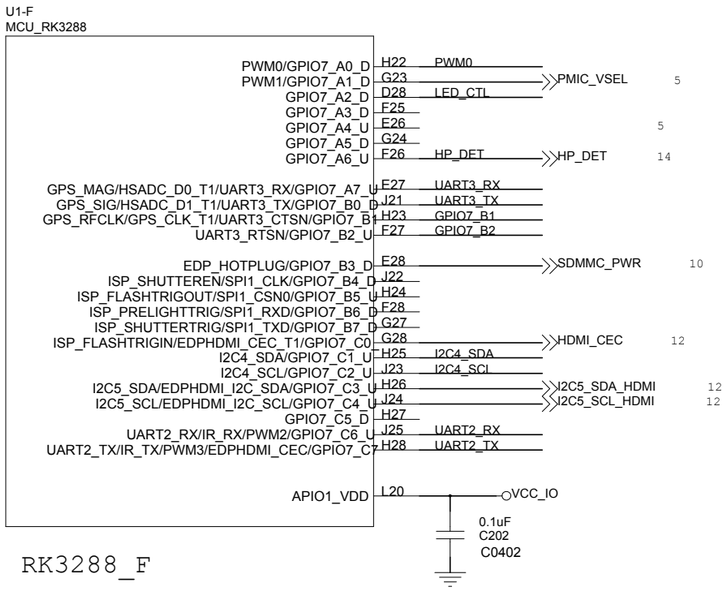

RK3288_F

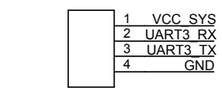

U6
CON4_2_54MM_FENCE

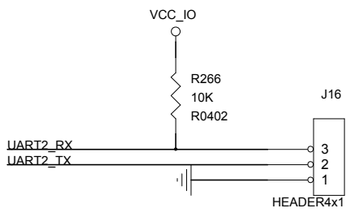

For debug(Default)

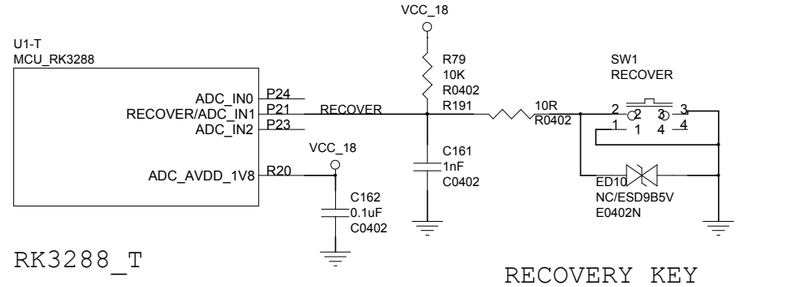

RK3288_T

RECOVERY KEY

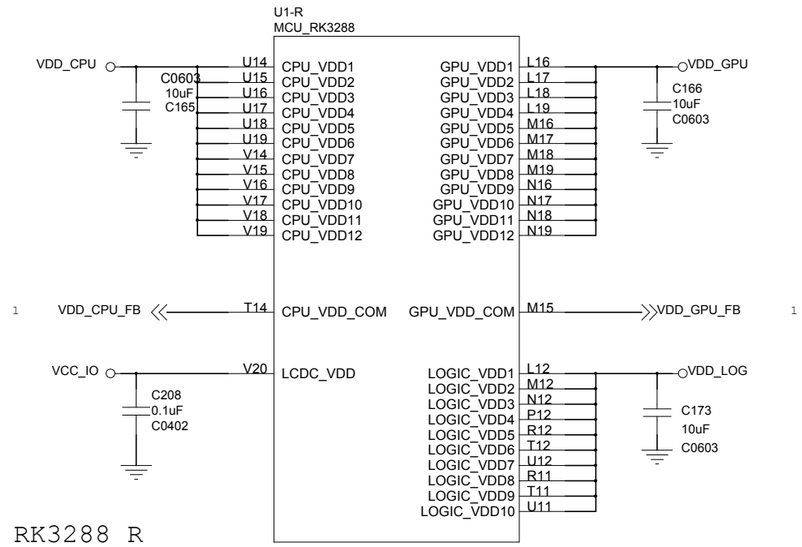

RK3288_R

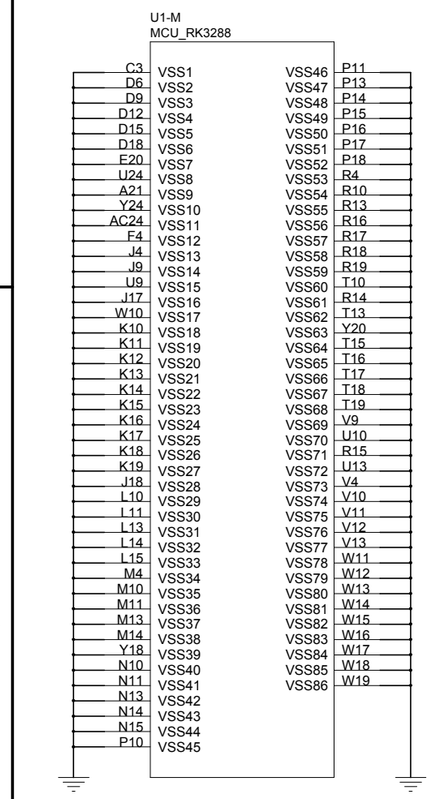

RK3288_M

RK3288 FILTER

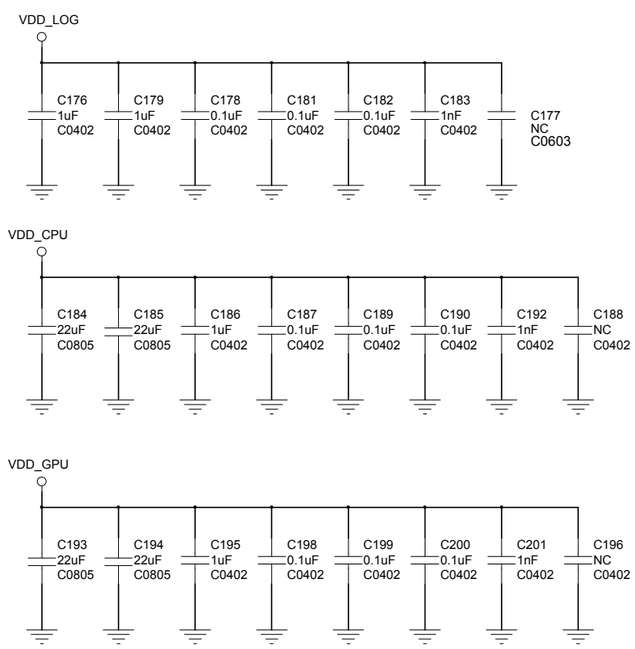

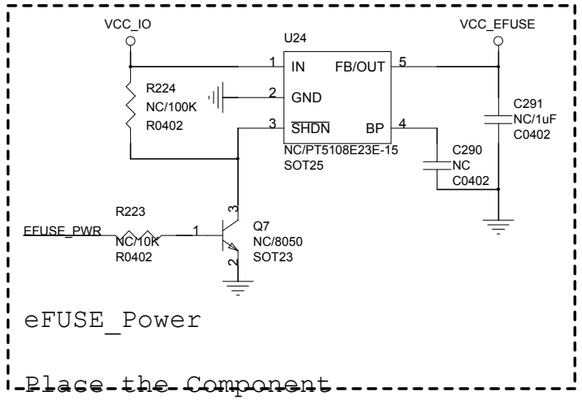

eFUSE_Power

Place the Component if need to write eFUSE

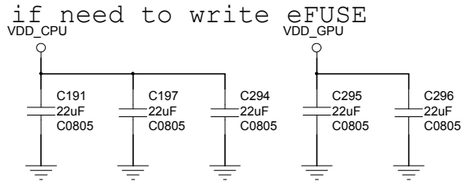

福州瑞达微电子有限公司

Title: RK3288 GPIO/POWER		
File:		REV: 1.2
Create Date:	Page Num:	6
Modify Date: Wednesday, May 18, 2016	Page Total:	13

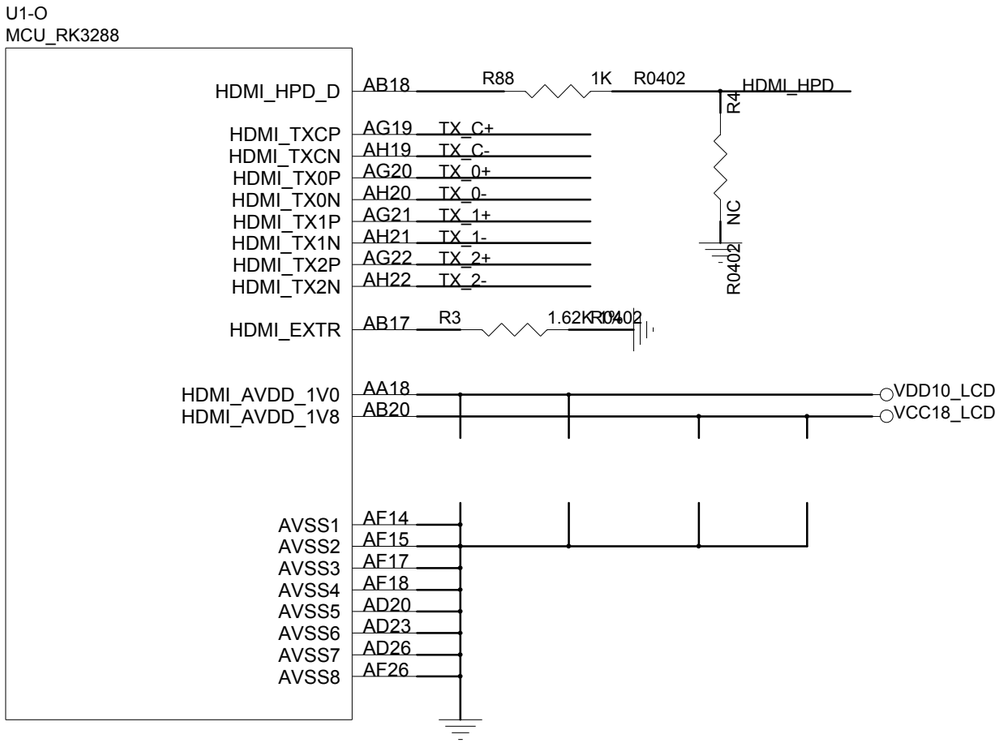

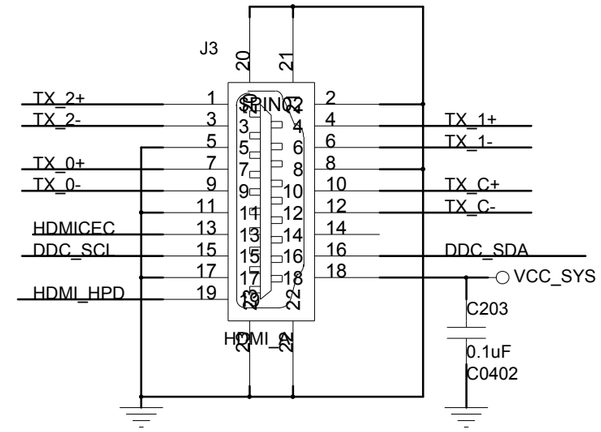

HDMI OUT

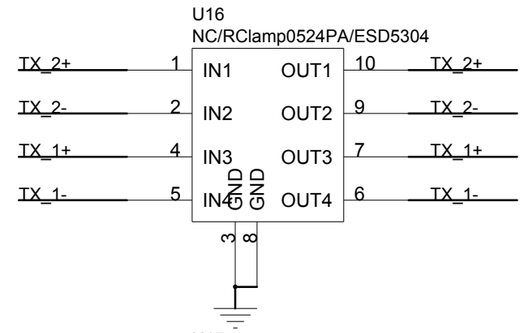

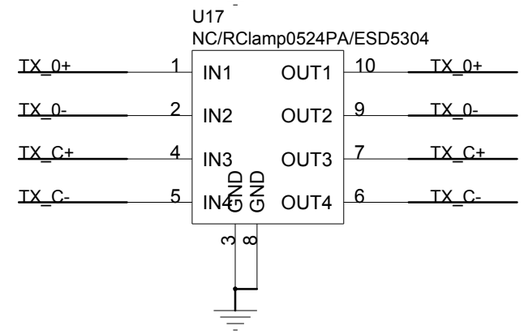

RK3288_O

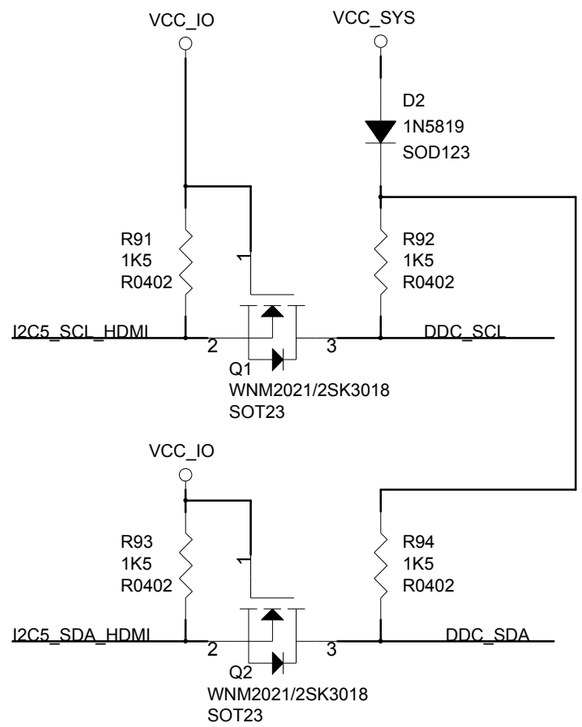

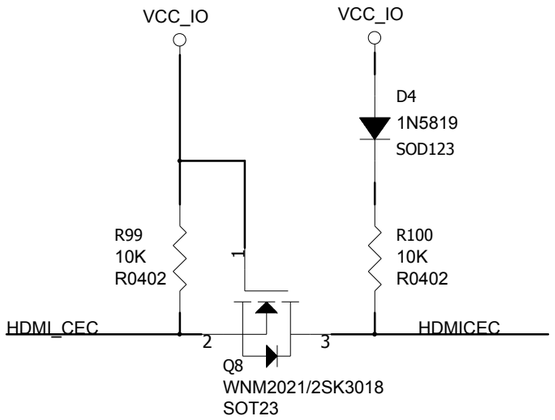

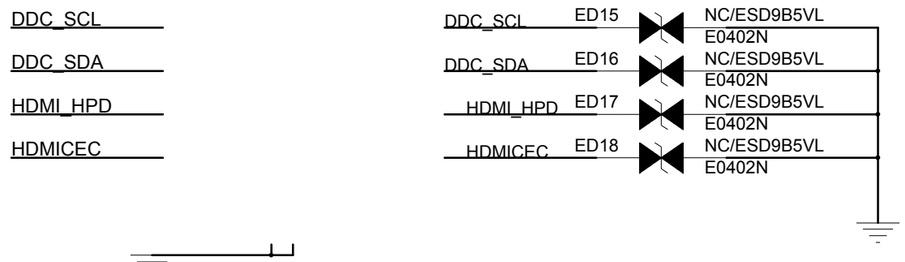

福州瑞芯微电子有限公司		
Title: HDMI OUT		
File:	REV: 1.2	
Create Date:	Page Num:	7
Modify Date: Wednesday, May 18, 2016	Page Total:	13

U1-A
MCU_RK3288

LCDC domain

LCDC0_HSYNC/GPIO1_D0_D	AA23
LCDC0_VSYNC/GPIO1_D1_D	AB24
LCDC0_DEN/GPIO1_D2_D	AA22
LCDC0_DCLK/GPIO1_D3_D	AA24
TRACE_D0/LCDC0_D0/LVDS_D0P	T27
TRACE_D1/LCDC0_D1/LVDS_D0N	T28
TRACE_D2/LCDC0_D2/LVDS_D1P	U27
TRACE_D3/LCDC0_D3/LVDS_D1N	U28
TRACE_D4/LCDC0_D4/LVDS_D2P	W27
TRACE_D5/LCDC0_D5/LVDS_D2N	W28
TRACE_D6/LCDC0_D6/LVDS_D3P	Y27
TRACE_D7/LCDC0_D7/LVDS_D3N	Y28
TRACE_D8/LCDC0_D8/LVDS_D4P	AA27
TRACE_D9/LCDC0_D9/LVDS_D4N	AA28
TRACE_D10/LCDC0_D10/LVDS_CLK0P	V27
TRACE_D11/LCDC0_D11/LVDS_CLK0N	V28
TRACE_D12/LCDC0_D12/LVDS_D5P	U25
TRACE_D13/LCDC0_D13/LVDS_D5N	U26
TRACE_D14/LCDC0_D14/LVDS_D6P	V25
TRACE_D15/LCDC0_D15/LVDS_D6N	V26
TRACE_CLK/LCDC0_D16/LVDS_D7P	AA25
TRACE_CTL/LCDC0_D17/LVDS_D7N	AA26
LCDC0_D18/LVDS_D8P	AB27
LCDC0_D19/LVDS_D8N	AB28
LCDC0_D20/LVDS_D9P	AC25
LCDC0_D21/LVDS_D9N	AC26
LCDC0_D22/LVDS_CLK1P	Y25
LCDC0_D23/LVDS_CLK1N	Y26
LVDS_EXTR	V24

R1702 2K%1 R0402

LVDS domain

LVDS_AVDD_1V0	AA20
LVDS_AVDD_1V8	AB21
LVDS_AVDD_3V3	AB23

VDD10_LCD
VCC18_LCD

R103 0R R0402 VCCA_33

C327 0.1uF C0402

R103建议预留不能删除。

RK3288_A

I2S_SCLK
I2S_LRCK_TX
I2S_SDO0
I2C2_SCL_AUDIO
SPDIF_TX

VCC_IO
I2S_SDI
I2S_LRCK_RX
I2S_MCLK
I2C2_SDA_AUDIO

U1-I
MCU_RK3288

I2S_SCLK/GPIO6_A0_D	AD11	I2S_SCLK
I2S_LRCK_RX/GPIO6_A1_D	AG11	I2S_LRCK_RX
I2S_LRCK_TX/GPIO6_A2_D	AF11	I2S_LRCK_TX
I2S_SDI/GPIO6_A3_D	AE11	I2S_SDI
I2S_SDO0/GPIO6_A4_D	AG12	I2S_SDO0
I2S_SDO1/GPIO6_A5_D	AH13	
I2S_SDO2/GPIO6_A6_D	AG13	
I2S_SDO3/GPIO6_A7_D	AH12	
I2S_CLK/GPIO6_B0_D	AC12	I2S_MCLK
I2C2_SDA/GPIO6_B1_U	AF12	I2C2_SDA_AUDIO
I2C2_SCL/GPIO6_B2_U	AD12	I2C2_SCL_AUDIO
SPDIF_TX/GPIO6_B3_D	AE12	SPDIF_TX
APIO4_VDD	Y12	

VCCA_33

C239 0.1uF C0402

MIC

RK3288_I

福州瑞芯微电子有限公司

Title:	RK3288 LCDC/I2S Controler		
File:		REV:	1.2
Create Date:		Page Num:	8
Modify Date:	Wednesday, May 18, 2016	Page Total:	13

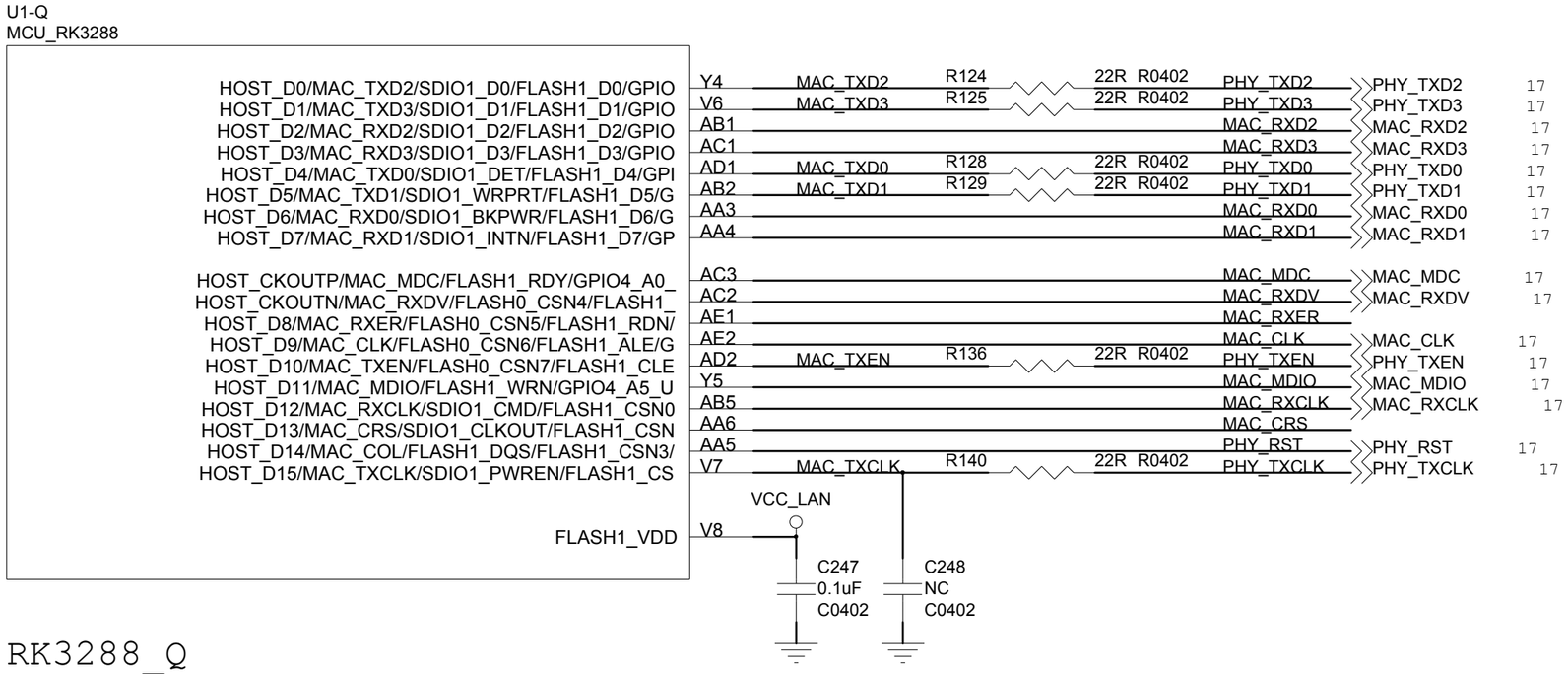

RK3288_Q

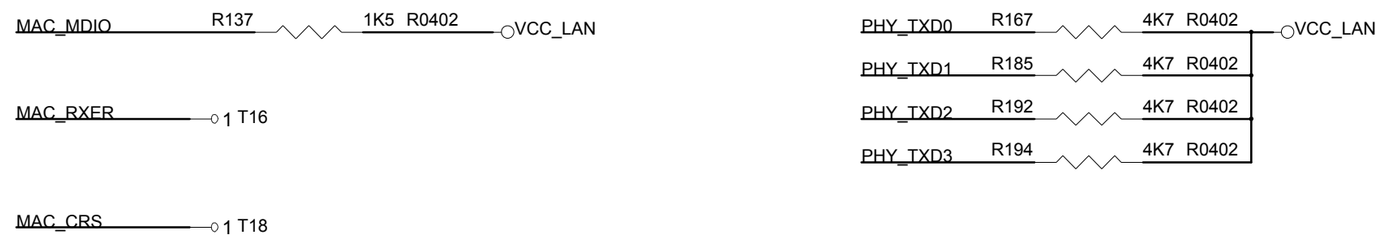

福州瑞芯微电子有限公司		
Title: RK3288 EthernetMAC Controler		
File:	REV: 1.2	
Create Date:	Page Num:	9
Modify Date: Wednesday, May 18, 2016	Page Total:	13

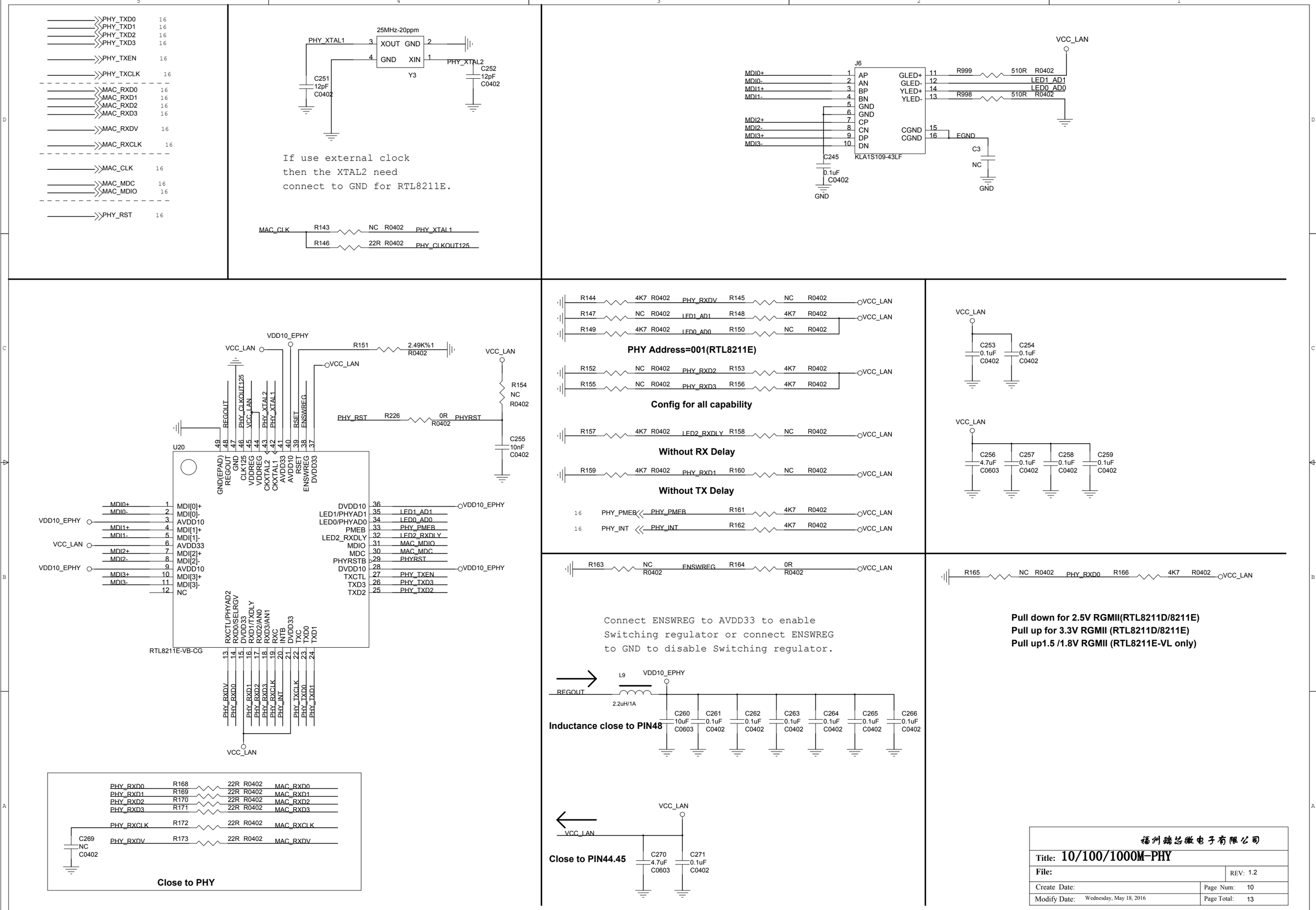

福州瑞芯微电子有限公司	
Title: 10/100/1000M-PHY	
File:	REV: 1.2
Create Date:	Page Num: 10
Modify Date: Wednesday, May 18, 2016	Page Total: 13

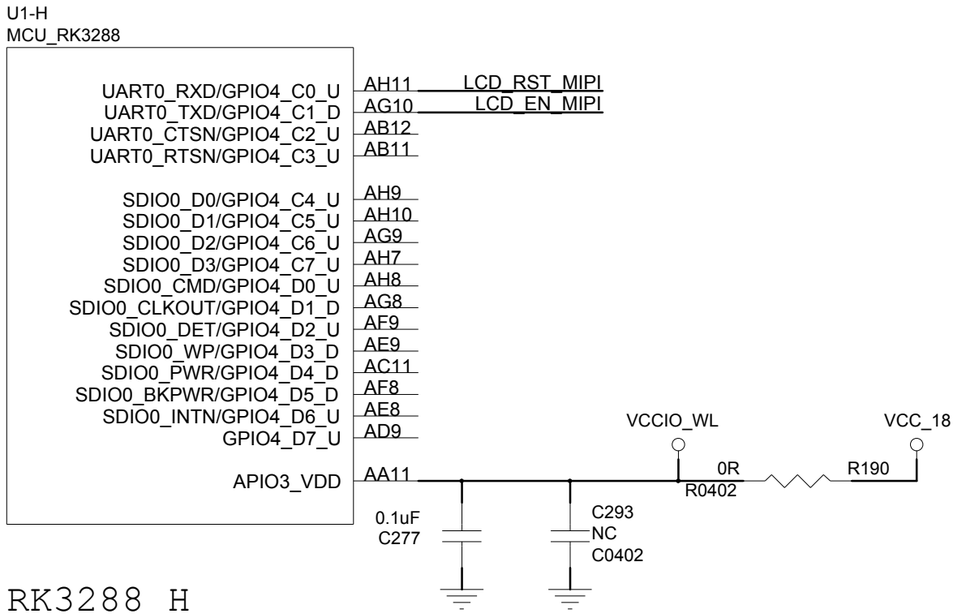

RK3288_H

福州瑞芯微电子有限公司

Title: RK3288 SDIO0 Controler		
File:	REV: 1.2	
Create Date:	Page Num: 11	
Modify Date: Wednesday, May 18, 2016	Page Total: 13	

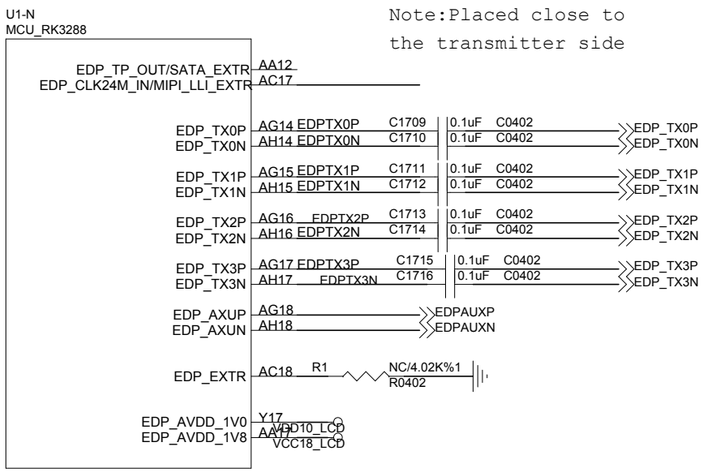

RK3288_N

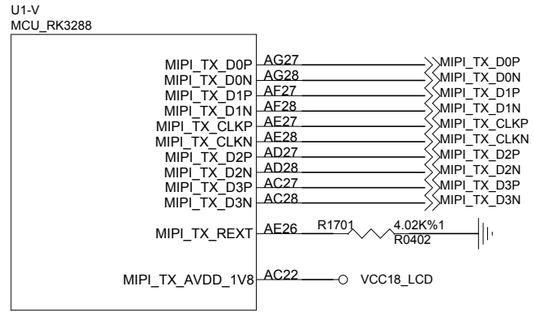

RK3288_V

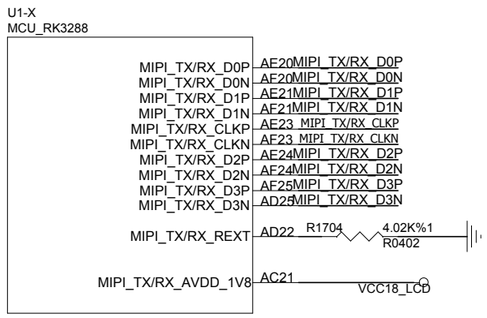

RK3288_X

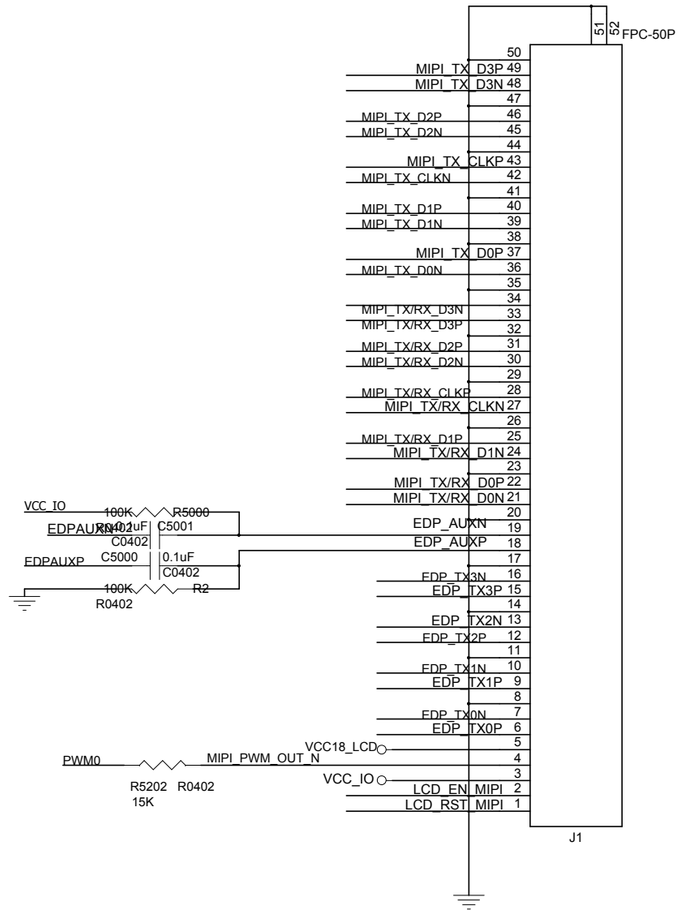

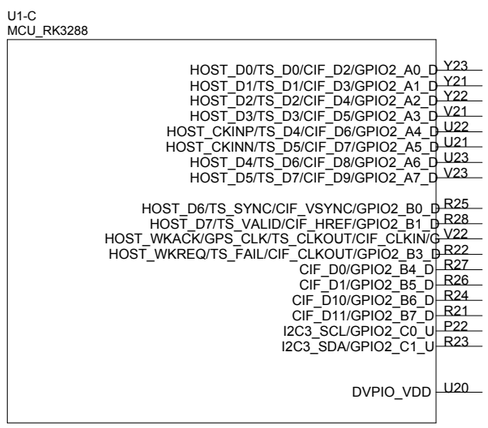

RK3288_C

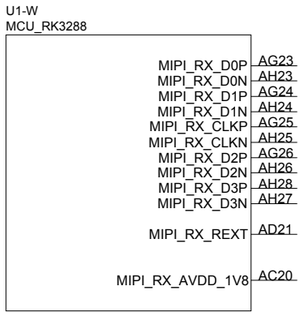

RK3288_W

福州瑞达微电子有限公司

Title: Camera Interface		
File:		REV: 1.2
Create Date:	Page Num:	12
Modify Date: Wednesday, May 18, 2016	Page Total:	13

U1-J
MCU_RK3288

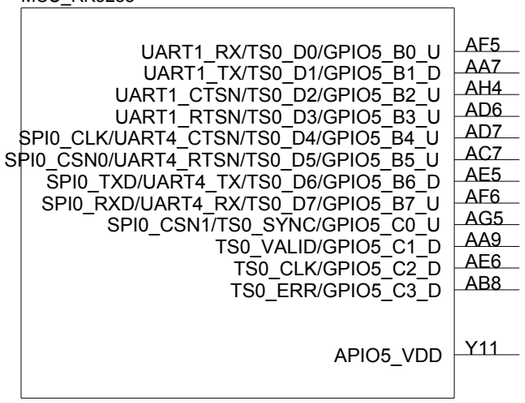

RK3288_J

福州瑞芯微电子有限公司	
Title: DTV-(Reserve)	
File:	REV: 1.2
Create Date:	Page Num: 13
Modify Date: Wednesday, May 18, 2016	Page Total: 13