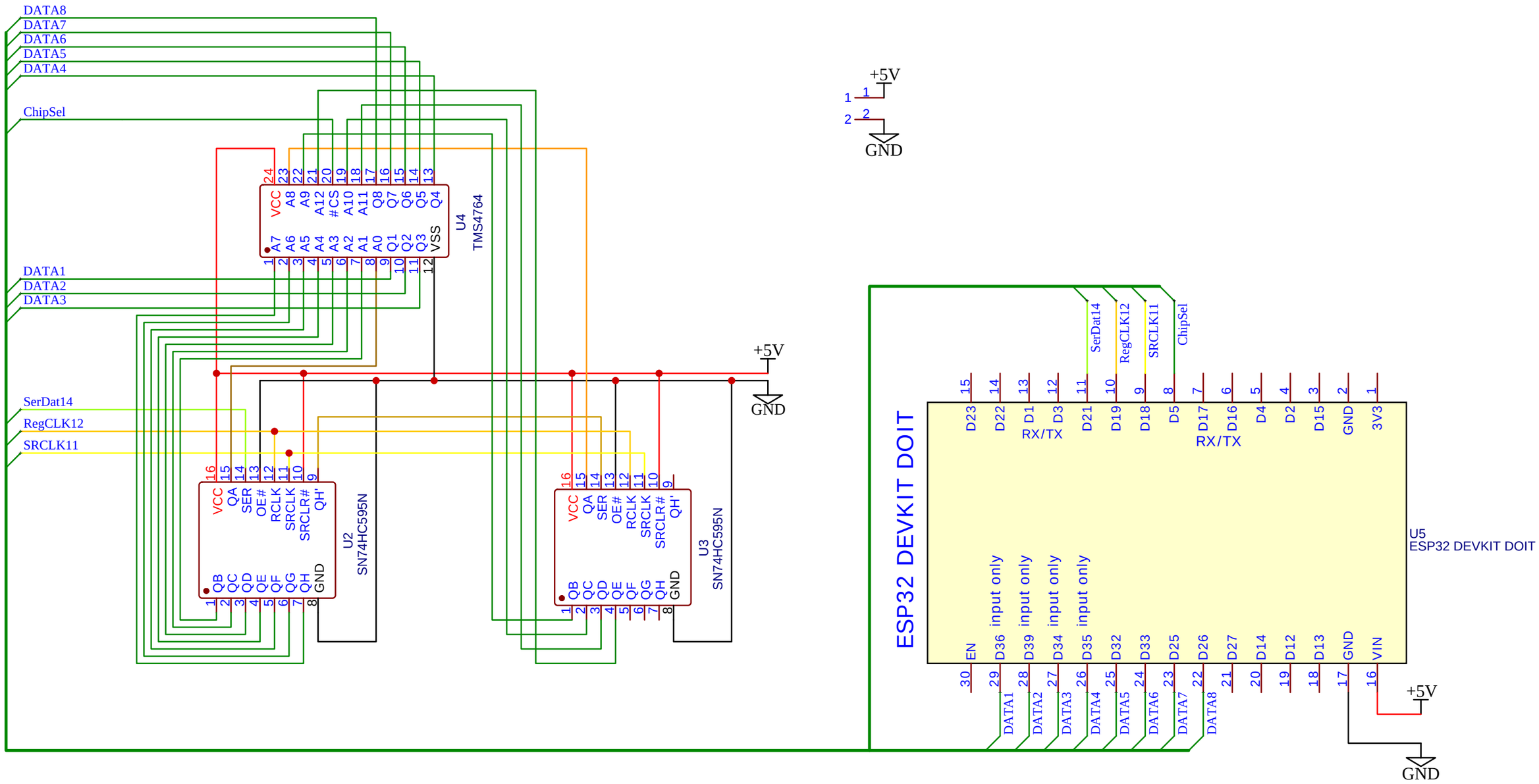

TITLE: Parallel ROM reader		REV: 1.0
嘉立创EDA	Company:	Sheet: 1/1
	Date: 2023-04-20	Drawn By: larryl79