File Systems II

DM510 Operating Systems

Lars Rohwedder

Windows macOS Android iOS

Disclaimer

These slides contain (modified) content and media from the official Operating System Concepts slides:
https://www.os-book.com/OS10/slide-dir/index.html

Today's lecture

- Chapter 14 of course book
- Introduction to programming project 3: implement a file system

Overview

We assume that the following basic abstraction of a storage device is provided by a driver:

- Storage device is array of **logical blocks** of specific size (e.g. 4 KB) that can be accessed by index

In this lecture, we are concerned with a (logical) file system responsible for

- Managing files, directories
- Managing protection and metadata
- Implementing file system operations: listing directory content, adding/removing files, etc.

Naive File System

Overview

- For Project 3 you will implement your own file system using FUSE
- Simplifying assumptions: files may have fixed size, efficiency not important

FUSE

- Framework to write a file system in user space that can be mounted into Linux
- You “only” need to implement the callback functions defined in FUSE

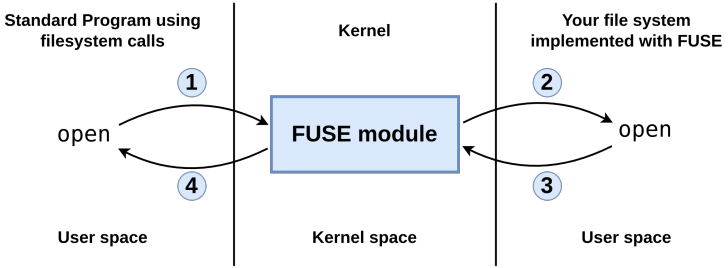

Project 3 structure overview

- For each directory and each file there is a **file-control-block (FCB) / inode**, here containing both meta-data (name, directory, etc.) and data of file
- Persistent data can be an array of FCBs
- We keep the array on a new partition on the SD card

File system operations

- **Reading/writing:** Write into data part of correct FCB
- **Listing directory contents:** requires scanning through entire array of FCBs
- **Creating/remove files and directories:** Add/remove FCB (may require rearranging FCBs and resizing array)

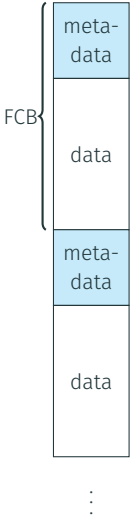

Basic internal elements of an advanced file system

File control block (FCB)

Object stored for each file. Contains

- file attributes (meta-data)
- data itself or where to find data

FCB is sometimes called **inode**

file permissions
file dates (create, access, write)
file owner, group, ACL
file size
file data blocks or pointers to file data blocks

Directory structure

A directory structure maps filenames (including paths) to FCBs.

- Each directory (folder) could be implemented as a file itself, storing the information about files contained in it in its data
- Alternatively, the directory structure could be stored separately from FCBs
- **Many options for internal data structure:** linear list, sorted list, tree structure, hash table
- **Aspects to consider:** space efficiency, performance, reliability, flexibility in directory size

In-memory file system structures

For performance optimization: caches for frequently accessed data:

- Directory structures
- Free data block list
- Frequently accessed file contents

Non-persistent data associated with file systems:

- Open-file tables, containing current position in sequential file access, list of processes that have opened the file, etc.

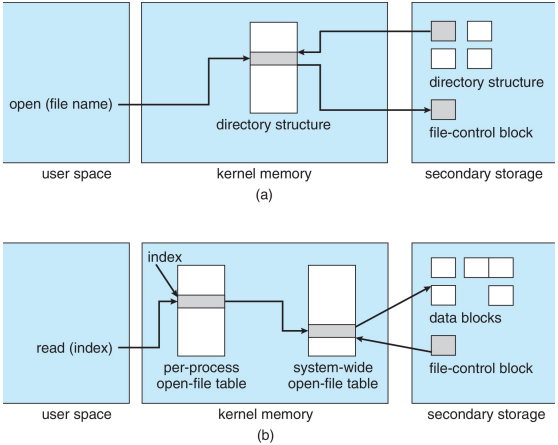

Allocation Methods

Contiguous allocation

- Each FCB contains pointer to first block and number of consecutively allocated blocks
- Very efficient access (both random and sequential)
- Leads to external fragmentation

Extent based system

The purpose is to make contiguous allocation more flexibile

- An extent is a contiguous set of blocks
- A file consists of zero or more extents
- To list the extents for a file we combine this with other approaches from the next slides

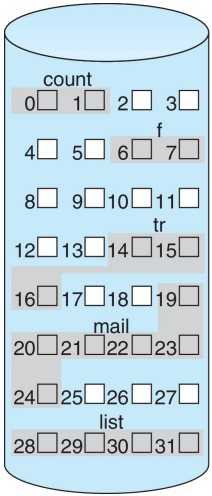

directory

file	start	length
count	0	2
tr	14	3
mail	19	6
list	28	4
f	6	2

Linked allocation

- Blocks for one file form a linked list: FCB contains pointer to first and last block; each block contains pointer to next block of this file
- Storage overhead: Loses size of one pointer for each block
- Slow random access: need to traverse entire linked list, which is scattered over hard drive (bad locality)

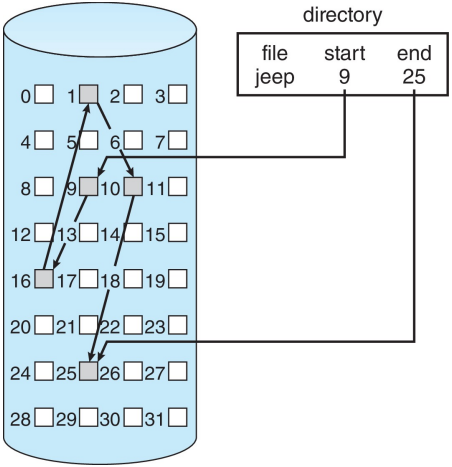

File-allocation table (FAT)

Disadvantages of linked allocation can be reduced by using a FAT:

- Store linking information in file-allocation table (FAT) in specific segment
- FAT has an entry for each block, with index of next block or special value for end of list
- Leads to better locality for random access and FAT can be cached

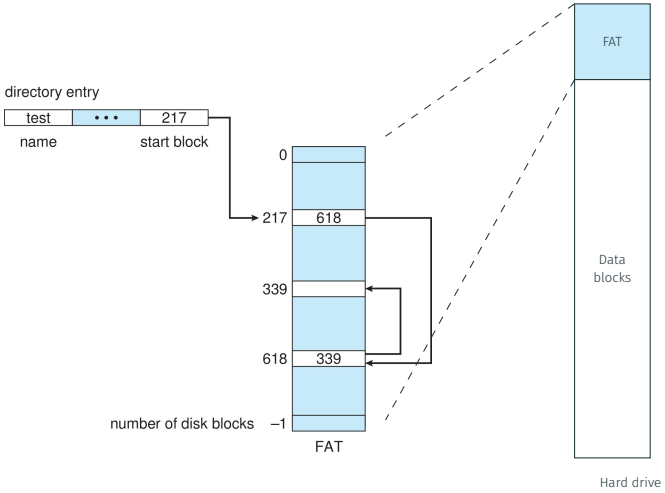

Indexed allocation

- Each file contains a pointer to a special **index block**
- Index block contains pointers to all other blocks of file
- Leads to storage overhead from index block
- Number of blocks for a file limited by number of pointers that fit into block

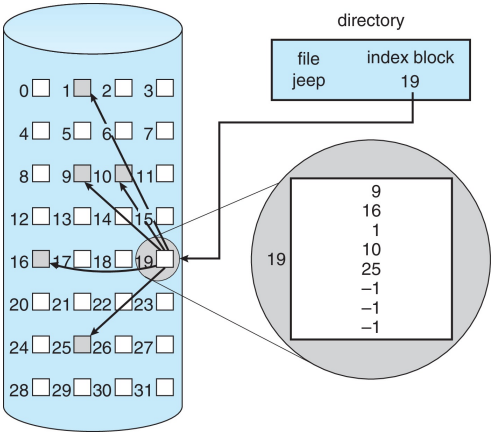

Indexed allocation

- Each file contains a pointer to a special **index block**
- Index block contains pointers to all other blocks of file
- Leads to storage overhead from index block
- Number of blocks for a file limited by number of pointers that fit into block

Large files

- Can use linked list of index blocks
- or multilevel indexing

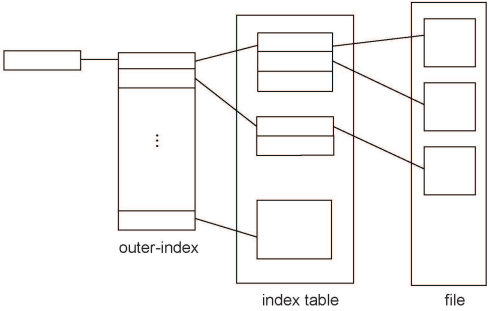

Combined scheme

- Example: Unix UFS
- 4KB blocks, 32 bit addresses

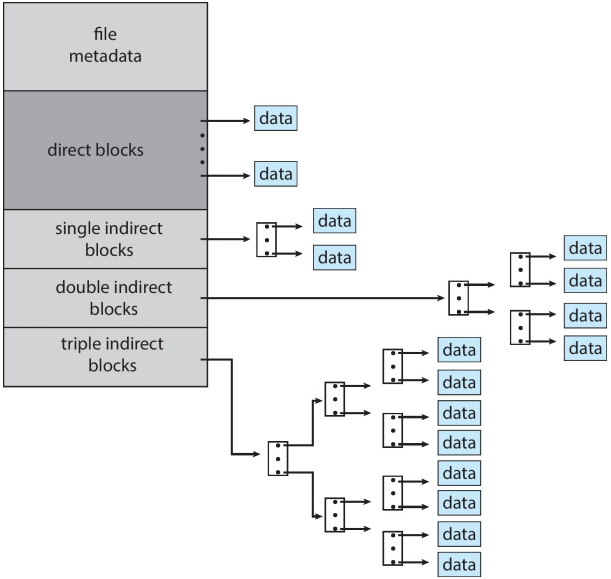

Data structures for free blocks

Bit map

- For hard drive with n blocks, use vector $\mathrm{free} \in \{0,1\}^n$ of n bits.
- $\mathrm{free}[i] = 0$: ith block is occupied
- $\mathrm{free}[i] = 1$: ith block is free
- Space overhead: $1/\text{bits-per-block}$

0 0 0 1 1 1 0 1 0 0 ···

5th block free

Data structures for free blocks

Bit map

- For hard drive with n blocks, use vector $\text{free} \in \{0,1\}^n$ of n bits.
- $\text{free}[i] = 0$: ith block is occupied
- $\text{free}[i] = 1$: ith block is free
- Space overhead: $1/\text{bits-per-block}$

0 0 0 1 1 1 0 1 0 0 ···

5th block free

Linked list

- No space overhead
- Efficient for allocating a single block (or few)
- Use for contiguous allocation is not easy

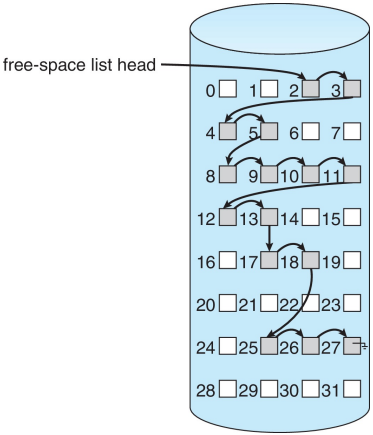

Data structures for free blocks

Bit map

- For hard drive with n blocks, use vector $\text{free} \in \{0,1\}^n$ of n bits.
- $\text{free}[i] = 0$: ith block is occupied
- $\text{free}[i] = 1$: ith block is free
- Space overhead: $1/\text{bits-per-block}$

0 0 0 1 1 1 0 1 0 0 ···

5th block free

Grouping

- Linked list of some of the free blocks
- Each blocks in this list contains pointers to other free blocks

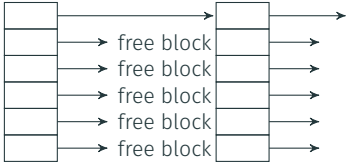

Linked list

- No space overhead
- Efficient for allocating a single block (or few)
- Use for contiguous allocation is not easy

Data structures for free blocks

Bit map

- For hard drive with n blocks, use vector $\text{free} \in \{0,1\}^n$ of n bits.
- $\text{free}[i] = 0$: ith block is occupied
- $\text{free}[i] = 1$: ith block is free
- Space overhead: 1/bits-per-block

0 0 0 1 1 1 0 1 0 0 ···

5th block free

Linked list

- No space overhead
- Efficient for allocating a single block (or few)
- Use for contiguous allocation is not easy

Grouping

- Linked list of some of the free blocks
- Each blocks in this list contains pointers to other free blocks

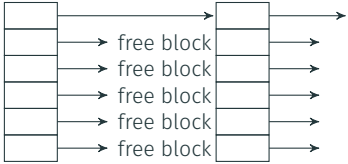

Counting

For more efficient use of contiguous areas of free blocks:

- Pointer to first free block and count of following free blocks
- Keep areas (first block and count) in linked list

Recovery

Recovery

- Modifications to file system often involves many write operations
- **Problem:** system crash may leave file system in inconsistent state, potentially resulting in data loss
- Here our focus is on file system, not file content

Consistency checking

- Programs, e.g. `fsck`, can attempt to detect and fix inconsistencies
- Very slow and not guaranteed to succeed

Backups

- Copy entire hard drive content to other storage device (disk, magnetic tape, etc.)
- If file system is broken, restore from most recent backup
- Expensive and may still lose recent data

Other solutions for recovery

Log structured file system

- File system maintains a log of **transactions**
- A transaction described the modification to perform
- All modifications are written to the log
- Transactions are asynchronously applied to the actual data
- After system crash, (incomplete) transactions from log are first applied

Not-in-place updates

- Instead of overwriting blocks with new data (in-place), create copy of block and modify it
- Once finished, change link from old copy to new copy