Digital Signal Processing

Correlation
Linear Model for Quantization
Power and Energy in Discrete-Time

Prof. Aldebaro Klautau.
Federal University of Pará (UFPA)

www.lasse.ufpa.br & www.ppgee.ufpa.br

What is correlation?

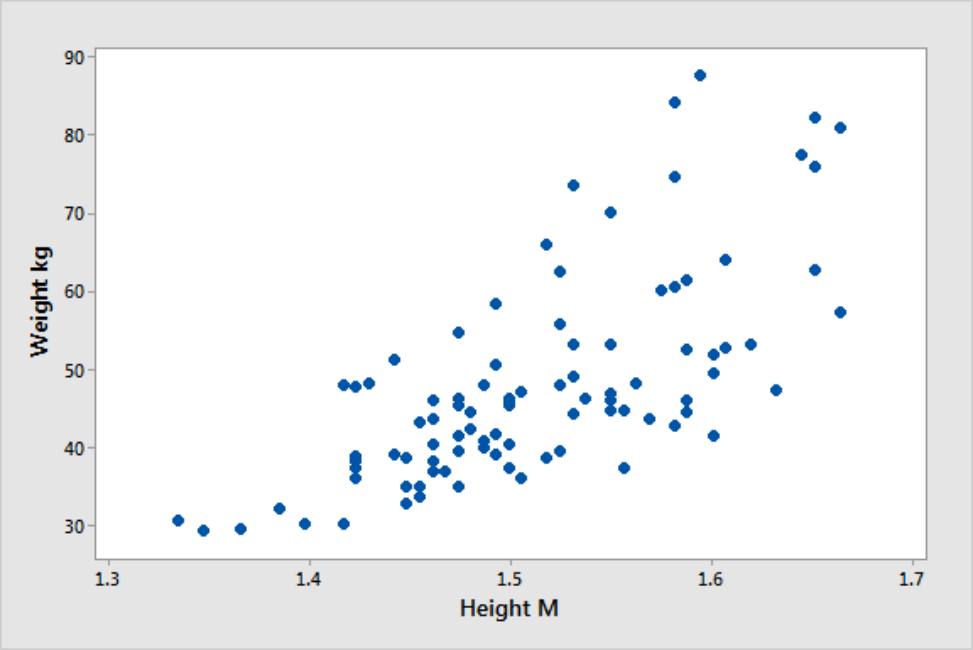

https://statisticsbyjim.com/basics/correlations/

Does height have a relationship with weight?

Convolution x Correlation

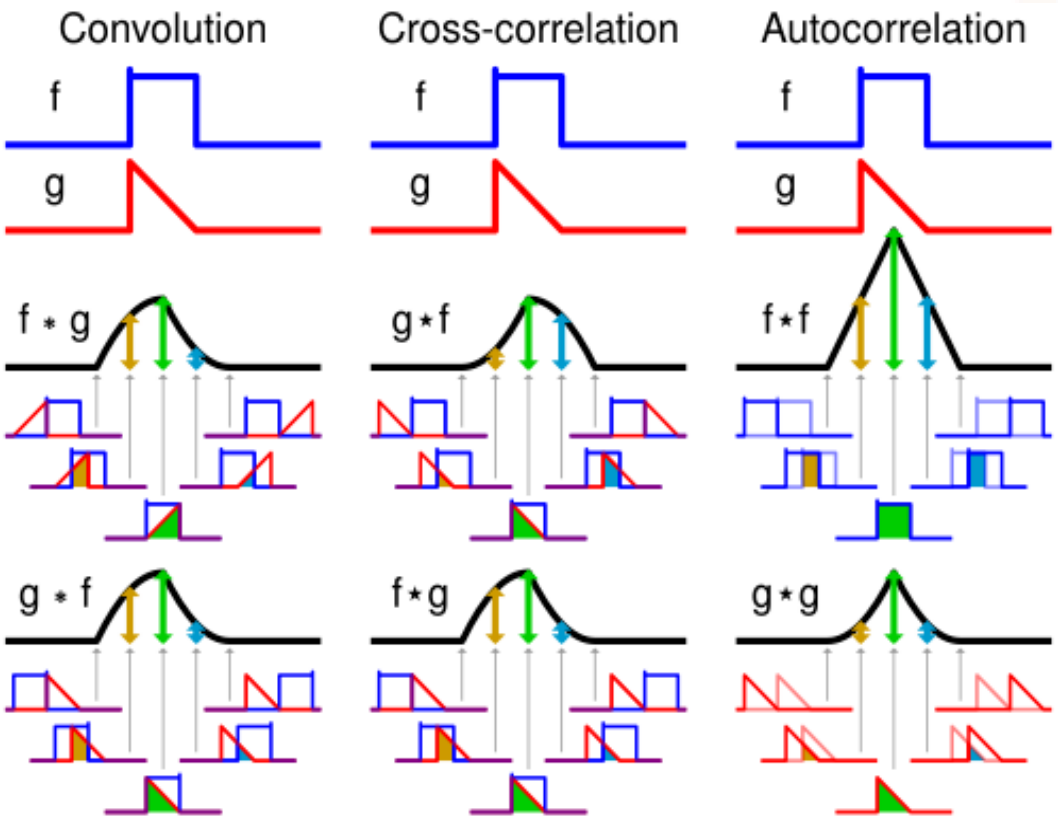

https://en.wikipedia.org/wiki/Cross-correlation

Autocorrelation

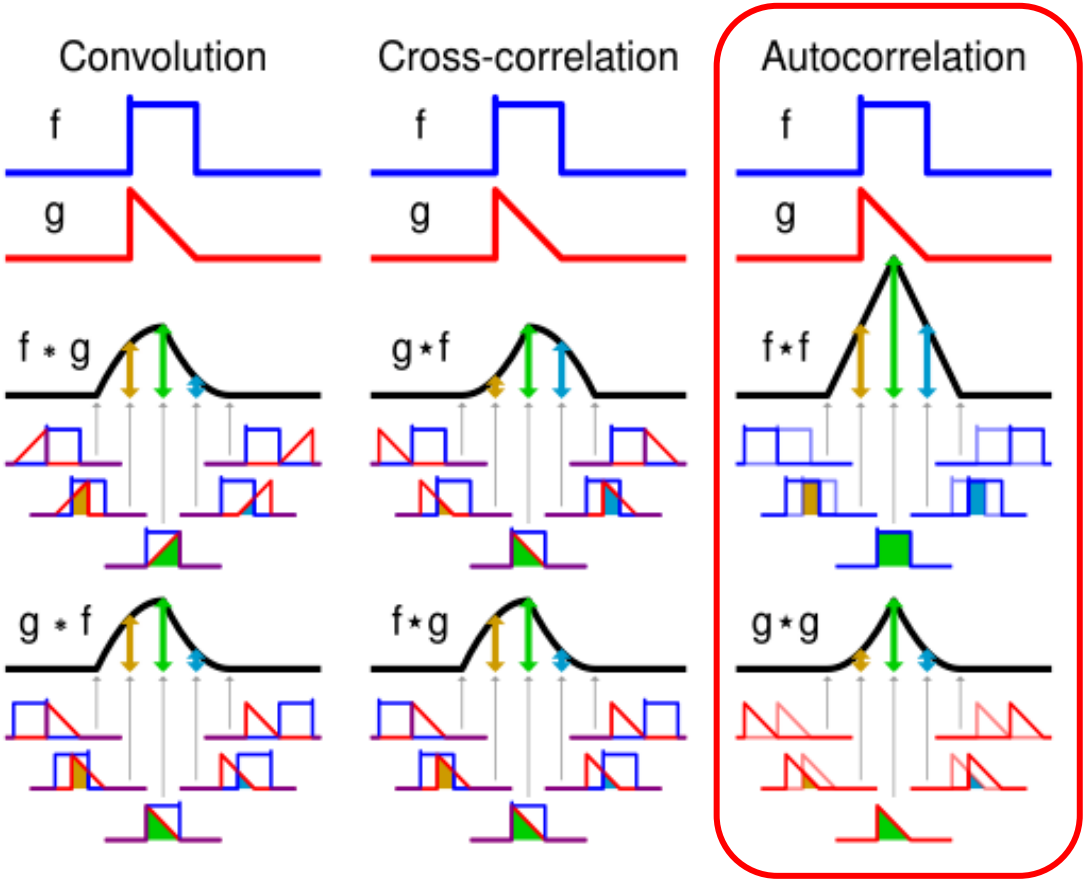

Autocorrelation measures the correlation of a signal with a lagged copy of itself

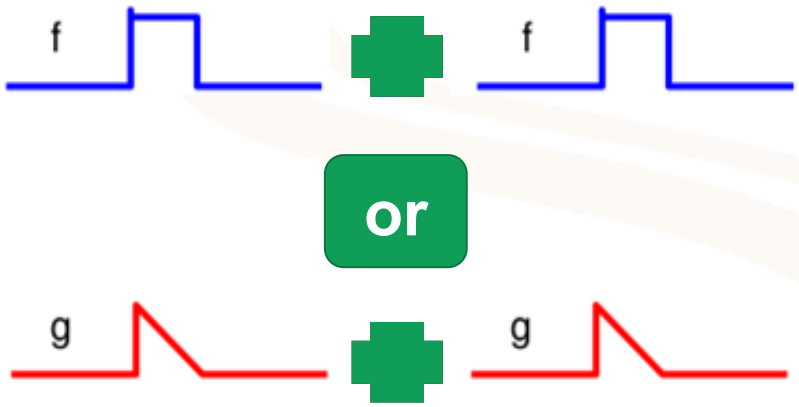

There are various formulas depending on the the type of signal or if we are dealing with stochastic processes

Autocorrelation for random signals

General stochastic processes

$$R_X(s,t) = \mathbb{E}[\mathcal{X}(s)\mathcal{X}^*(t)]$$

Wide-sense stationary (WSS) processes

$$R_X(\tau) = \mathbb{E}[\mathcal{X}(t+\tau)\mathcal{X}^*(t)]$$

Autocorrelation for deterministic signals (continuous-time)

Energy signals

P = 0 | E = finite

$$R_X(\tau) = \int_{-\infty}^{\infty} x(t+\tau)x^*(t)\mathrm{d}t$$

Power signals

P = finite | E = ∞

$$R_X(\tau) = \lim_{T\to\infty} \frac{1}{2T}\int_{-T}^{T} x(t+\tau)x^*(t)\mathrm{d}t$$

Special cases: $\tau = 0$

$$R_X(0) = \int_{-\infty}^{\infty} |x(t)|^2\mathrm{d}t = E$$

$$R_X(0) = \lim_{T\to\infty} \frac{1}{2T}\int_{-T}^{T} |x(t)|^2\mathrm{d}t = \mathcal{P}$$

Autocorrelation for deterministic signals (discrete-time)

In discrete-time the autocorrelation can be not normalized or normalized.

Not normalized version:

$$R_X[i] = \sum_n x[n+i]x^*[n]$$

$$i = -(N-1), \ldots, -1, 0, 1, \ldots, N-1$$

N: samples of the discrete-time signal

Table 1.10: *Example of autocorrelation for a real signal* $[1, 2, 3]$ $(n = 0, 1, 2)$.

lag i	valid products $x^*[n]x[n+i]$	$R_X[i]$
-2	$x^*[2]x[0]$	3
-1	$x^*[1]x[0] + x^*[2]x[1]$	8
0	$x^*[0]x[0] + x^*[1]x[1] + x^*[2]x[2]$	14
1	$x^*[0]x[1] + x^*[1]x[2]$	8
2	$x^*[0]x[2]$	3

$$x[n] = \delta[n] + 2\delta[n-1] + 3\delta[n-2]$$

Example: i = -2

$$x[n] = \delta[n] + 2\delta[n-1] + 3\delta[n-2]$$

n-2 n-3 n-4

Autocorrelation for deterministic signals (discrete-time)

Normalized version:

$$R_X[i] = \frac{1}{N - |i|} \sum_n x[n+i]x^*[n]$$

Table 1.11: *Example of calculating the unscaled autocorrelation for a complex-valued signal* $[1+j, 2, 3]$ $(n = 0, 1, 2)$, *where* $j = \sqrt{-1}$.

lag i	valid products $x^*[n]x[n+i]$	$R_X[i]$
-2	$x^*[2]x[0]$	3+3j
-1	$x^*[1]x[0] + x^*[2]x[1]$	8+2j
0	$x^*[0]x[0] + x^*[1]x[1] + x^*[2]x[2]$	15
1	$x^*[0]x[1] + x^*[1]x[2]$	8-2j
2	$x^*[0]x[2]$	3-3j

Real signals: EVEN function

$$R_X(\tau) = R_X(-\tau)$$

Complex signals: Hermitian symmetric

$$R_X(\tau) = R_X^*(-\tau)$$

Examples of autocorrelation: white signal

A white signal has the following properties:

$$R[i] = A\delta[i]$$

$$R(\tau) = A\delta(\tau)$$

The autocorrelation is non-zero only in the origin implies in:

- The samples of it are uncorrelated
- The PSD (Power Spectral Density) is a constant
  - Fourier transform of autocorrelation = PSD

The name "white" comes from the fact that this signal has power in all frequencies, i.e., flat in the PSD -> Inspired in the property of white light

If the samples of the signal are identically distributed according to a Gaussian PDF:

White Gaussian Noise (WGN)

If we add them to another signal:

Additive Gaussian Noise (AWGN)

Examples of autocorrelation: sinusoid

Example 1.51. **Autocorrelation of sinusoid.** Using Eq. (1.53), the autocorrelation of a sinusoid $x(t) = A\sin(\omega t + \phi)$ can be calculated as follows:

$$R_X(\tau) = \lim_{T\to\infty} \frac{1}{2T}\int_{-T}^{T} x(t+\tau)x^*(t)\mathrm{d}t$$

$$R(\tau) = \lim_{T\to\infty}\left[\frac{1}{2T}\int_{-T}^{T} A\sin(\omega t+\phi)A\sin(\omega t+\omega\tau+\phi)\mathrm{d}t\right]$$

$$\boxed{\frac{A^2\cos(\omega\tau)}{2}}$$

Periodic

Not dependent on the phase

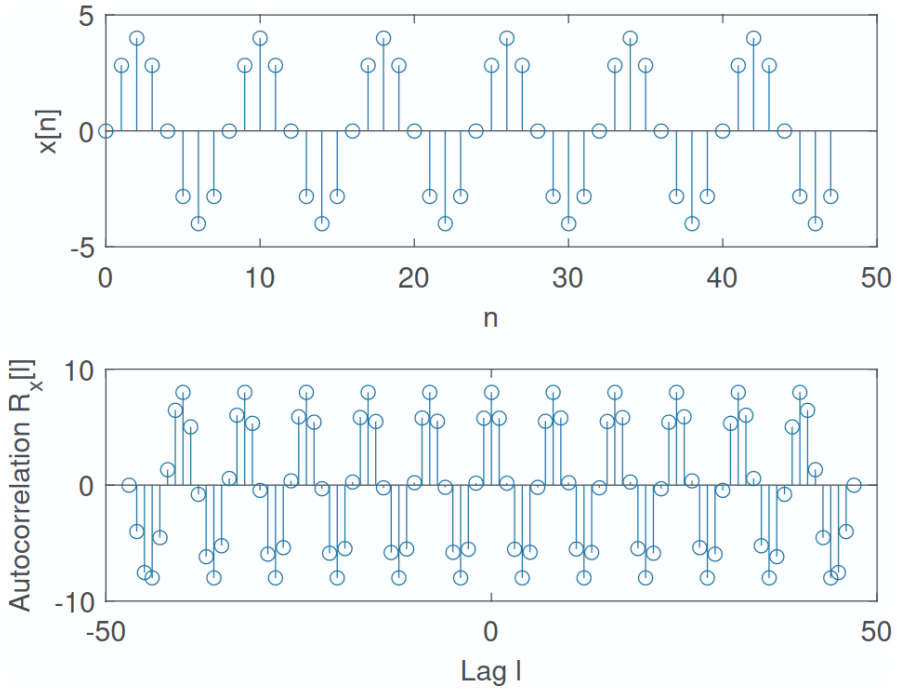

Figure 1.54: *A sinusoid of period N=8 samples and its autocorrelation, which is also periodic each 8 lags. The cosine corresponding to $R_x[l]$ has amplitude $A^2/2 = 4^2/2 = 8$.*

Autocorrelation of a signal inherits any periodicity that is present in the signal

This periodicity can be more evident in the autocorrelation than in the signal waveform

Examples of autocorrelation: sinusoid

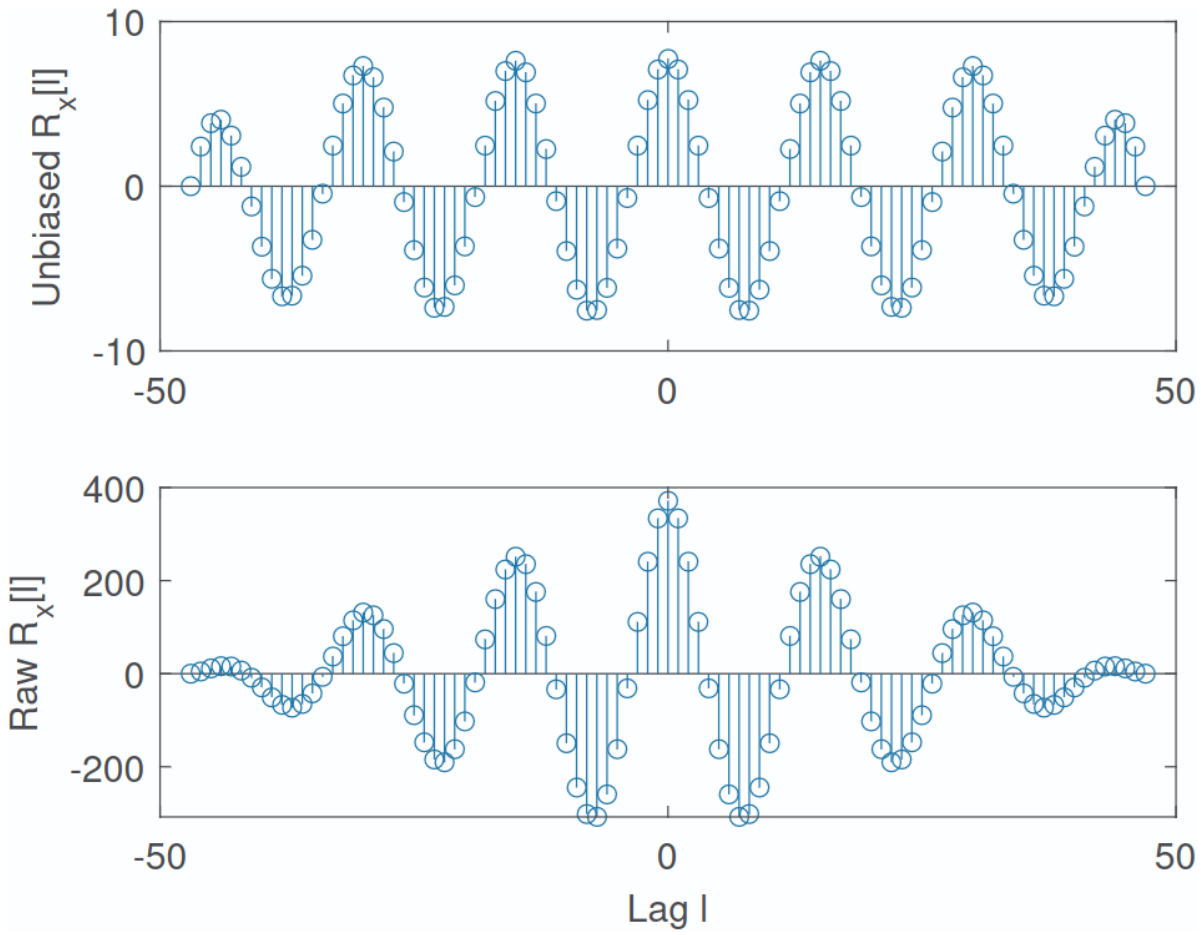

$$R_X[i] = \frac{1}{N - |i|} \sum_n x[n+i]x^*[n]$$

$$R_X[i] = \sum_n x[n+i]x^*[n]$$

Figure 1.55: *The a) unbiased and b) raw (unscaled) autcorrelations for the sinusoid of Figure 1.54 with a new period of N=15 samples.*

Cross-correlation

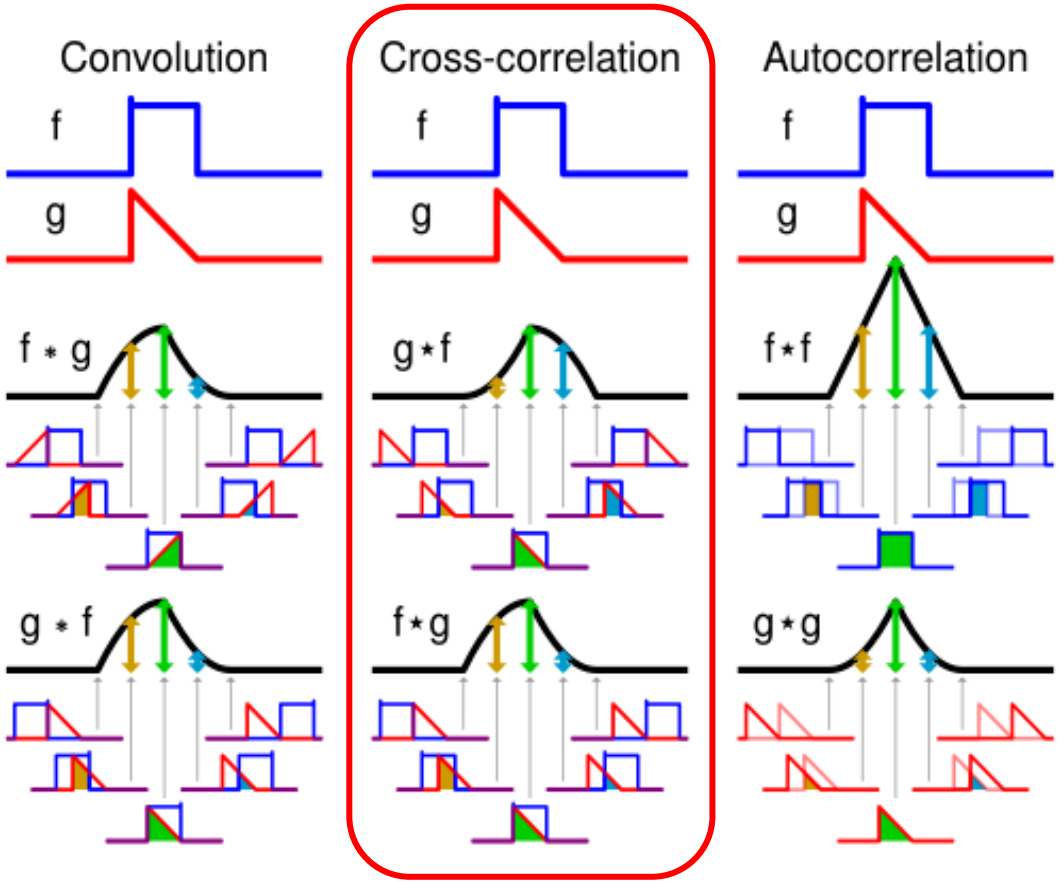

Similar to the ACF, but uses two different signals

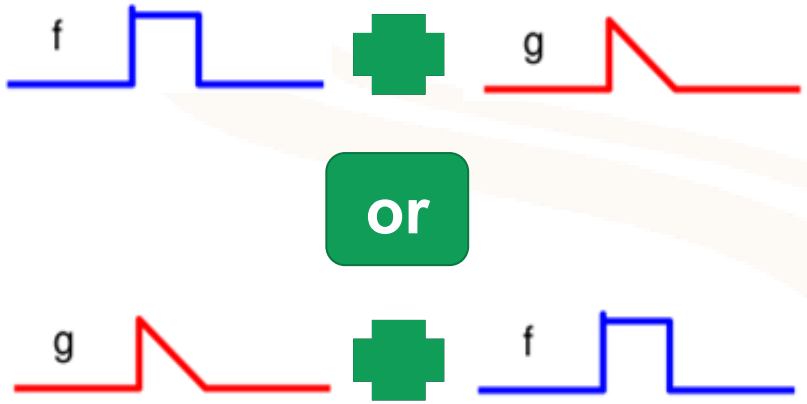

Can be seen as the standard correlation

Cross-correlation for deterministic cases

$$R_{xy}(\tau) \triangleq \int_{-\infty}^{\infty} x(t+\tau)y^*(t)\mathrm{d}t$$

Continuous-time

$$R_{xy}[l] \triangleq \sum_{n=-\infty}^{\infty} x[n+l]y^*[n]$$

Discrete-time

Cross-correlation example

Example 1.52. **The power of a sum of signals is the sum of their powers in case they are uncorrelated.** Assume that a sinusoid $x[n]$ is contaminated by noise $z[n]$ such that the noisy version of the signal is $y[n] = x[n] + z[n]$. The signal $z[n]$ is a WGN (see Section 1.10.1) that is added to the signal of interest $x[n]$ and, therefore, called additive white Gaussian noise (AWGN). If $x[n]$ and $z[n]$ are uncorrelated, such that $R_{xz}[l] = \mathbb{E}[x[n+l]z[n]] = 0, \forall l$, the autocorrelation $R_y[l]$ of $y[n]$ is given by

$$\begin{aligned} R_y[l] &= \mathbb{E}[y[n+l]y[n]] = \mathbb{E}[(x[n+l] + z[n+l])(x[n] + z[n])] \\ &= R_x[l] + R_{zx}[l] + R_{xz}[l] + R_z[l] \\ &= R_x[l] + R_z[l]. \end{aligned}$$

Cross-correlation example

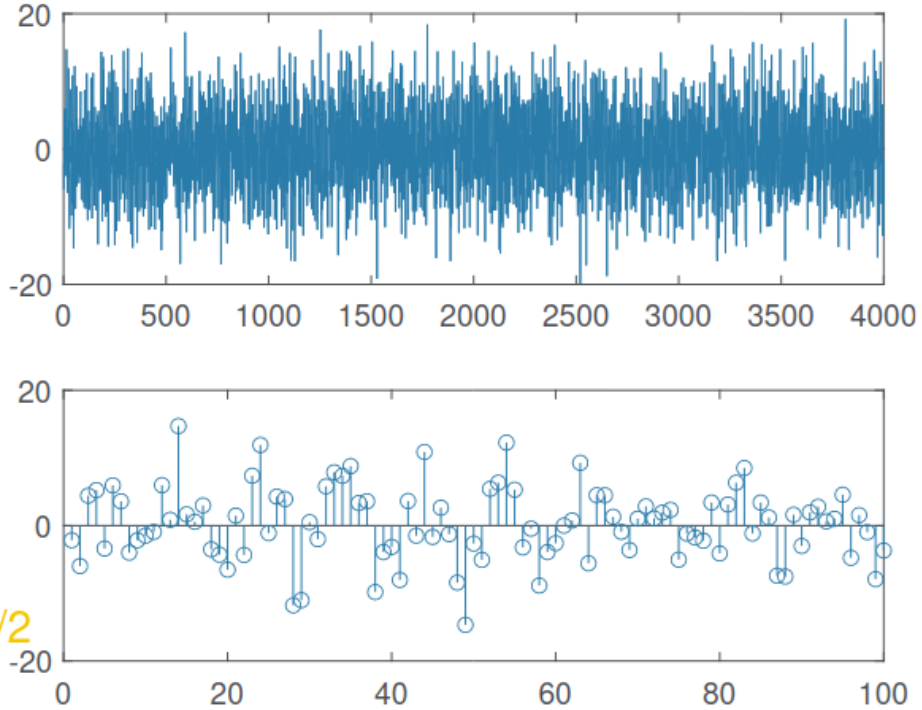

Sinusoid power = A^2/2
4^2/2=8W

Figure 1.56: *Sinusoid of amplitude 4 V immersed in AWGN of power 25 W. The bottom graph is a zoom showing the first 100 samples.*

Hard to see the sinusoid

$$\mathrm{SNR}_{\mathrm{dB}} = 10\log_{10}(8/25) \approx -5 \text{ dB}$$

Then, we will try the autocorrelation $R_y(l)$

Cross-correlation example

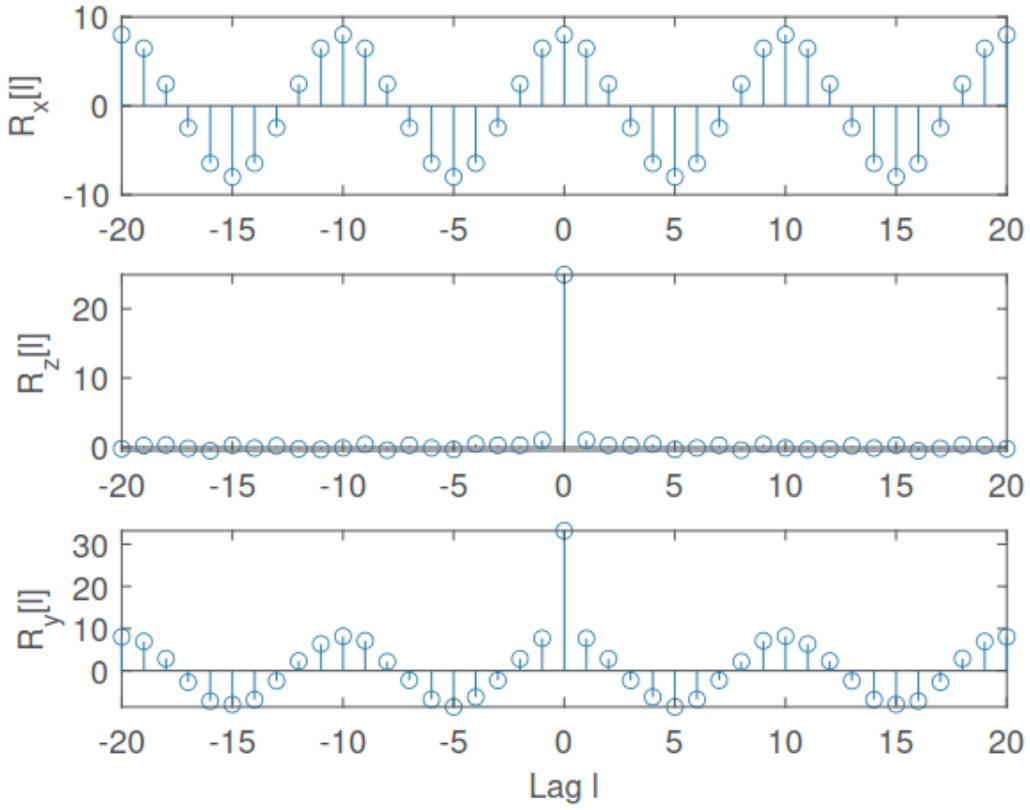

Figure 1.57: *Bottom graph: autocorrelation of the sine plus noise in Figure 1.56, top: autocorrelation of the sine and middle: autocorrelation of the noise.*

POWER (W)

$$R_x[0] = 8$$

$$R_z[0] = 24.92$$

$$8 + 25 = 33 \text{ W}$$

Rule of thumb for ADC: 6dB SNR gain per bit

$e[n]$ is quantization noise with uniform distribution with $\mu = 0$ and $\sigma^2 = \Delta^2/12$, due to range $e[n] \in [-0.5\Delta, 0.5\Delta[$

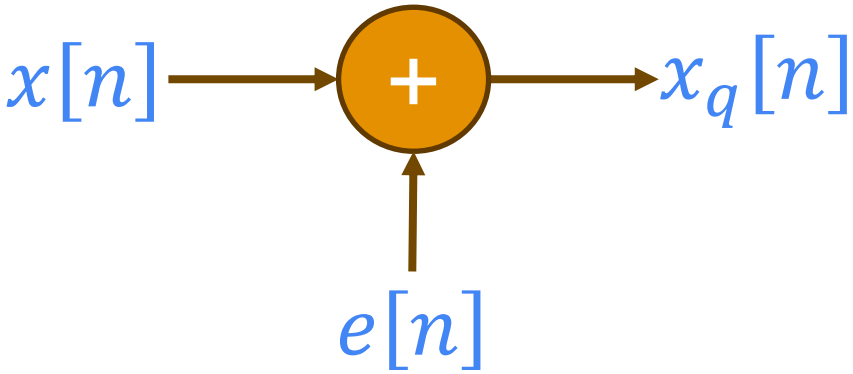

We use the model

$$\Delta = \frac{\hat{X}_{max} - \hat{X}_{min}}{2^b - 1}$$

$$P_n = \frac{(\hat{X}_{max} - \hat{X}_{min})^2}{(2^b - 1)^2 12}$$

$$SNR = \frac{P_x}{P_e}$$

$$C_1 = \frac{(\hat{X}_{max} - \hat{X}_{min})^2}{12}$$

$$SNR_{db} = 10log(P_x) + 20log(2^b - 1) - 10log(C_1)$$

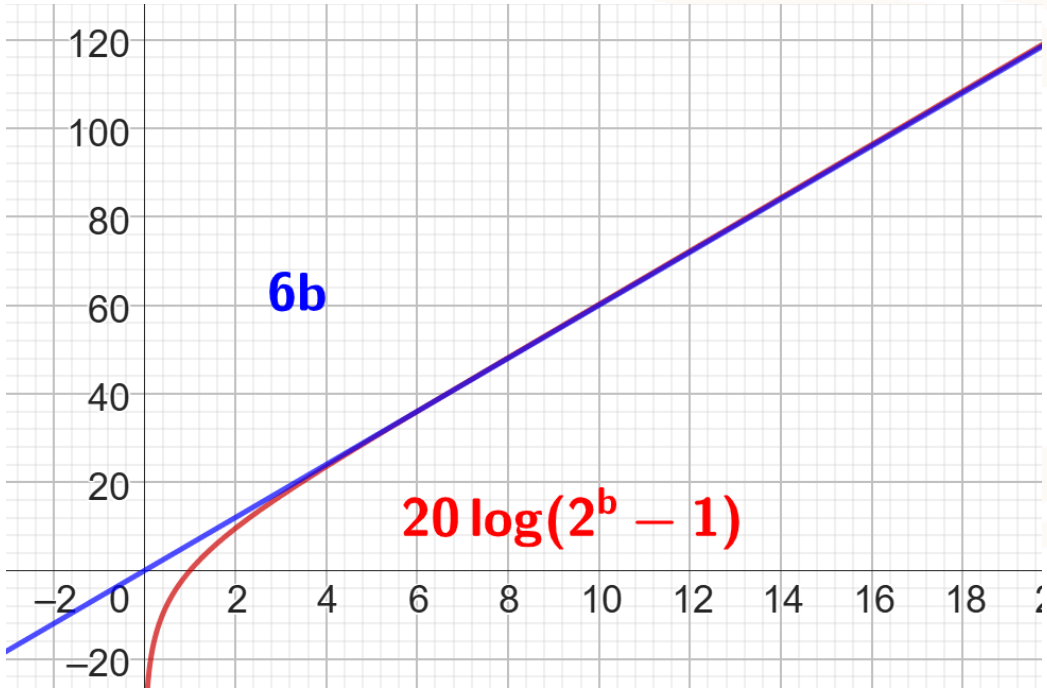

Each bit increases 6.021 dB
Approx 6 dB in SNR

Power and energy of discrete-time signals

We are assuming the following formulas to discrete-time signals:

$$\mathcal{P} \triangleq \lim_{N\to\infty} \frac{1}{2N+1} \sum_{n=-N}^{N} |x[n]|^2$$

$$E \triangleq \sum_{n=-\infty}^{\infty} |x[n]|^2$$

If we are dealing with vectors, we simplify to:

$$\mathcal{P} = \frac{E}{N} = \frac{1}{N} \sum_{n=1}^{N} |x[n]|^2$$

$$E = \sum_{n=1}^{N} |x[n]|^2 = ||\mathbf{x}||^2$$

Power and energy of discrete-time signals

Caution: discrete-time *n* does not have a dimension of time as the continous time *t*

Vector elements are time-ordered:

$$\mathcal{P} = \frac{E}{N} = \frac{1}{N}\sum_{n=1}^{N} |x[n]|^2$$

Watts

Vector elements are not time-ordered:

$$\overline{E} = \frac{1}{M}\sum_{i=1}^{M} E_i = \frac{1}{M}\sum_{i=1}^{M} ||\mathbf{x}_i||^2$$

Joules

Obs: in this case there are M vectors

Power and energy of discrete-time signals

Under adequate conditions, i.e., when the sampling theorem is obeyed, the power in analog time can be preserved in discrete time

$$P_c = P_d$$

$$\underset{(P_c)}{x(t)} \rightarrow \boxed{sampling} \rightarrow x_s(t) \rightarrow \boxed{S\,/\,D} \rightarrow \underset{(P_d)}{x[n]} = x(nT_s).$$

$$x(nT_s) = \underset{(P_d)}{x[n]} \rightarrow \boxed{D\,/\,S} \rightarrow x_s(t) \rightarrow \boxed{h(t)} \rightarrow \underset{(P_c)}{x(t)}$$

Quiz Time!

Autocorrelation

Energy and Power

Cross-Correlation

6db Rule of Thumb

Thank you!

Prof. Aldebaro Klautau.
Federal University of Pará (UFPA)

www.lasse.ufpa.br & www.ppgee.ufpa.br