Recurrent Neural Networks (RNN)

EC1036 - Inteligência Computacional

5G & IoT Research Group - Telecommunications, Automation and Electronics Research and Development Center (LASSE)

Federal University of Pará

Why recurrent neural networks?

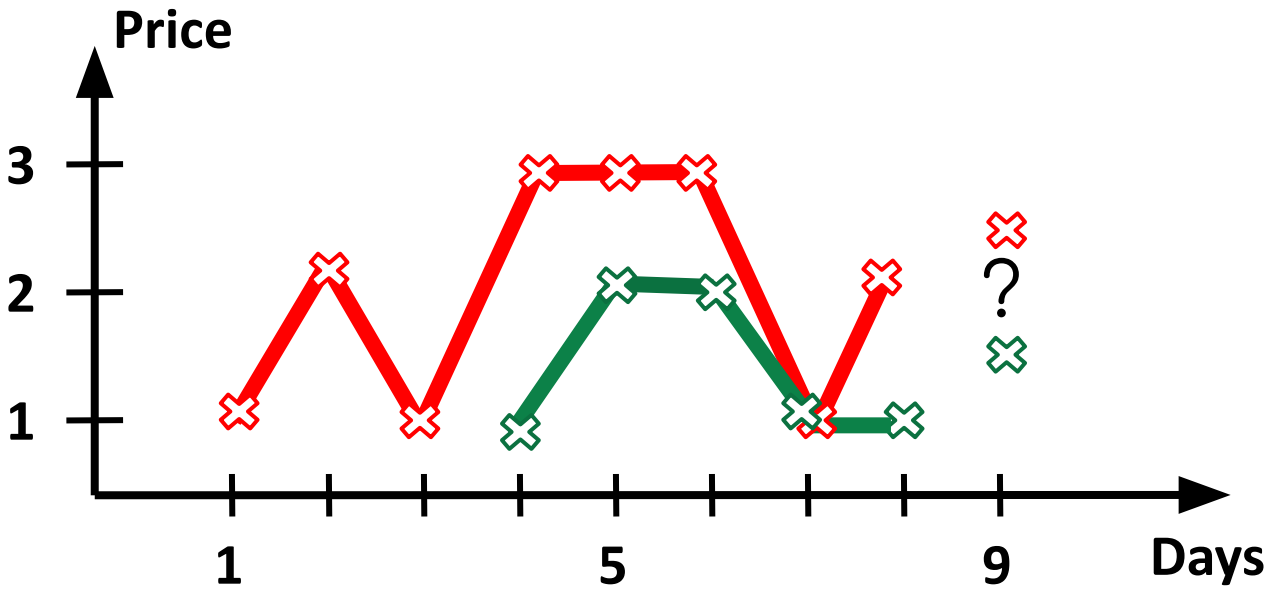

Let's think in a problem about prediction house prices!

We need a neural network that can predict the price in the 9-th day

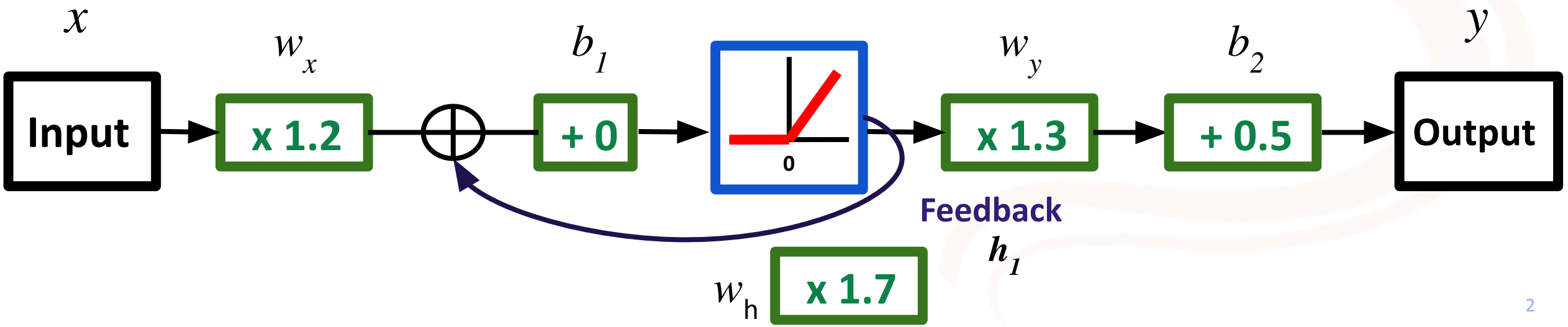

Vanilla RNN main characteristics

The hidden state mathematical definition

$$h_t = \sigma(W_h h_{t-1} + W_x x_t + b_h)$$

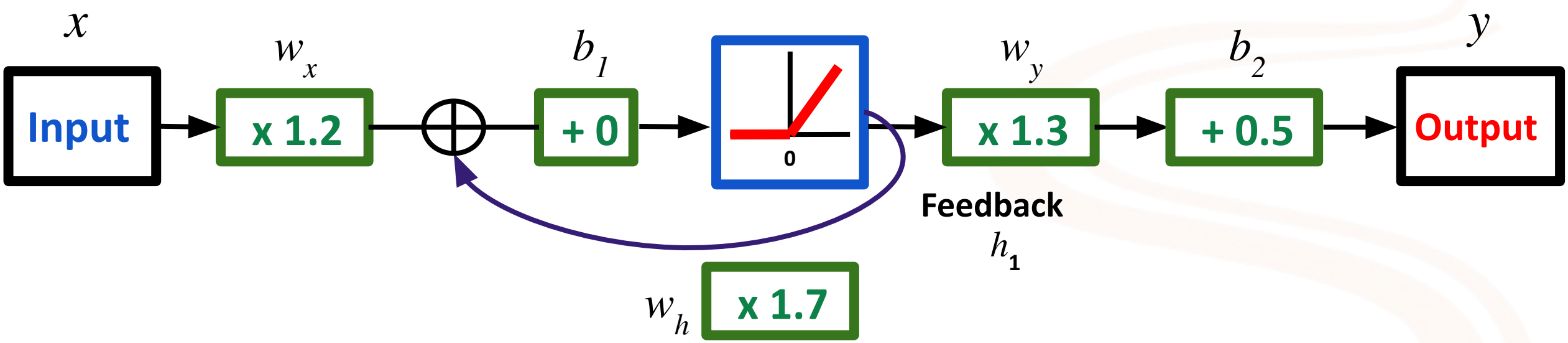

The input data can have different dimensions

Process data sequentially

The "influence" of each input is made by a feedback line

Unrolled RNN

A simple time series

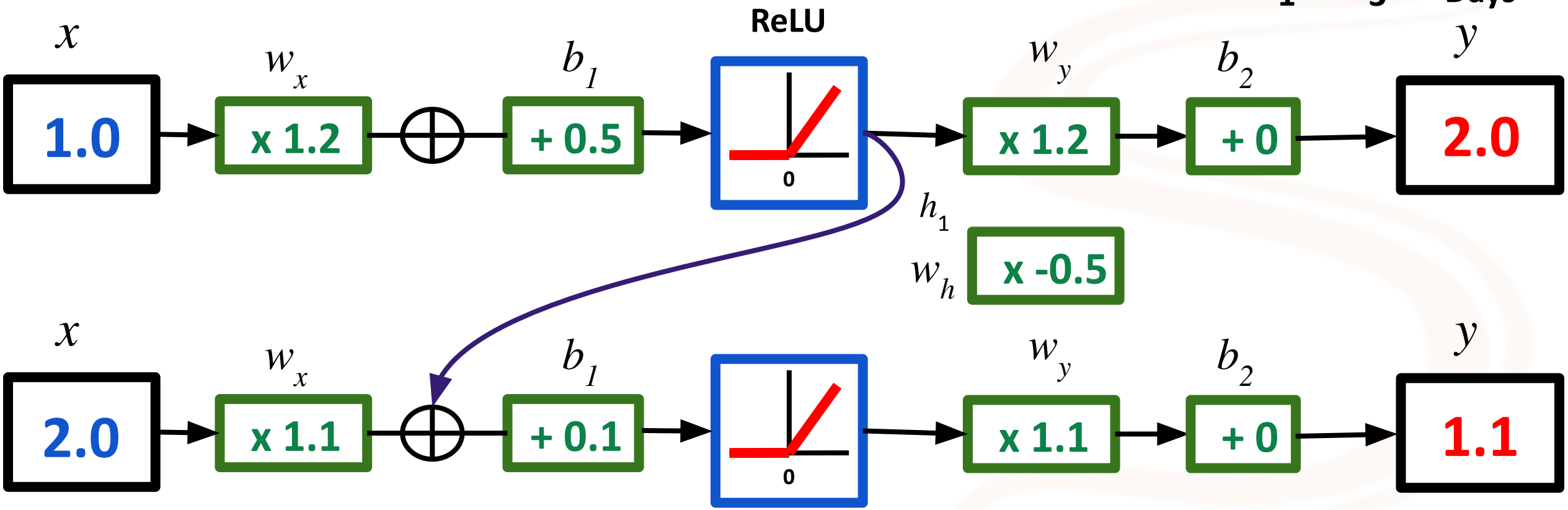

Vanishing and Exploding Gradient

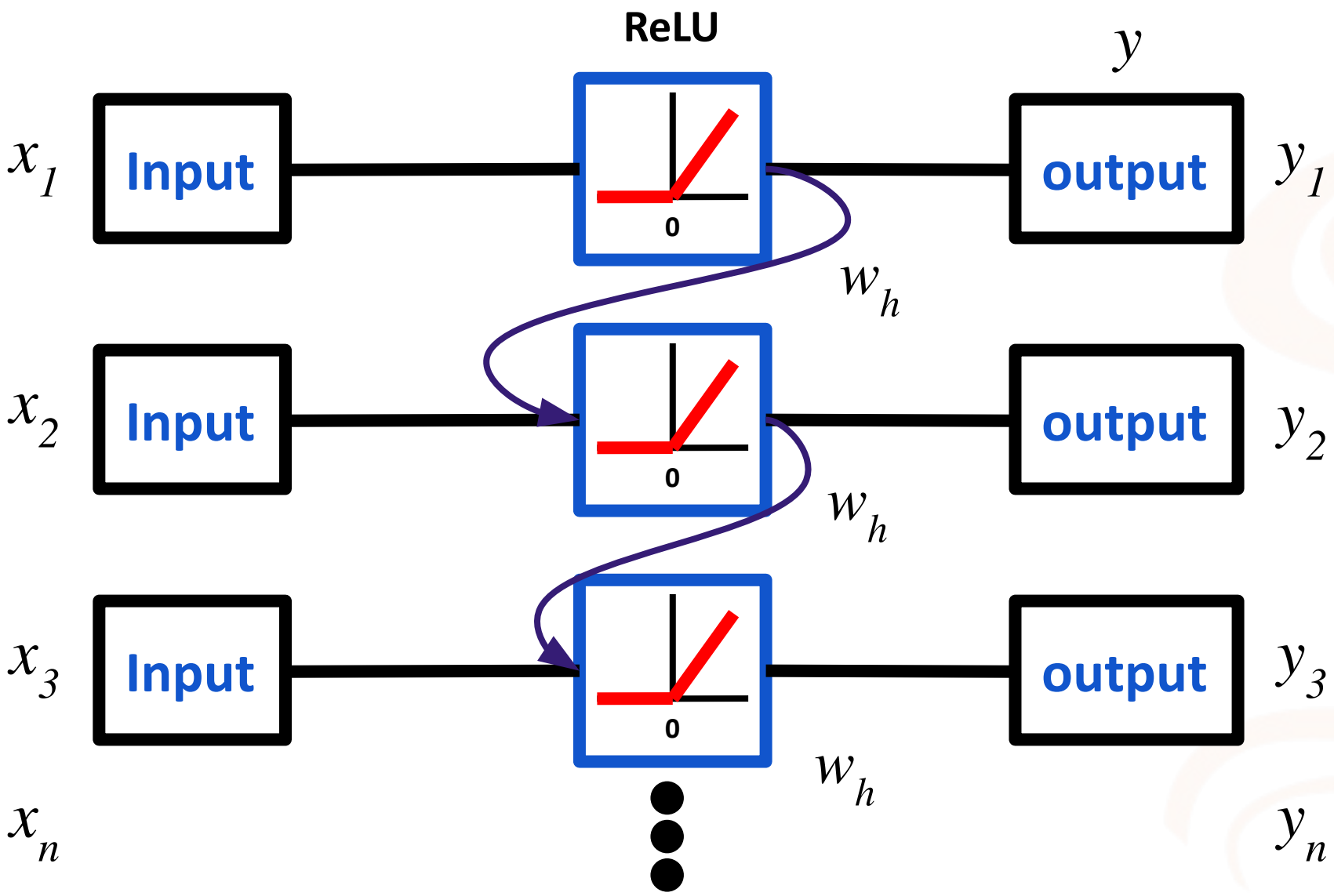

$$y_n = x_n w_h^n$$

if $w_h > 0$, the greater the number of n samples, more amplified will be the output

if $w_h < 0$, the greater the number of n samples, more vanished will be the output

Long short-term memory

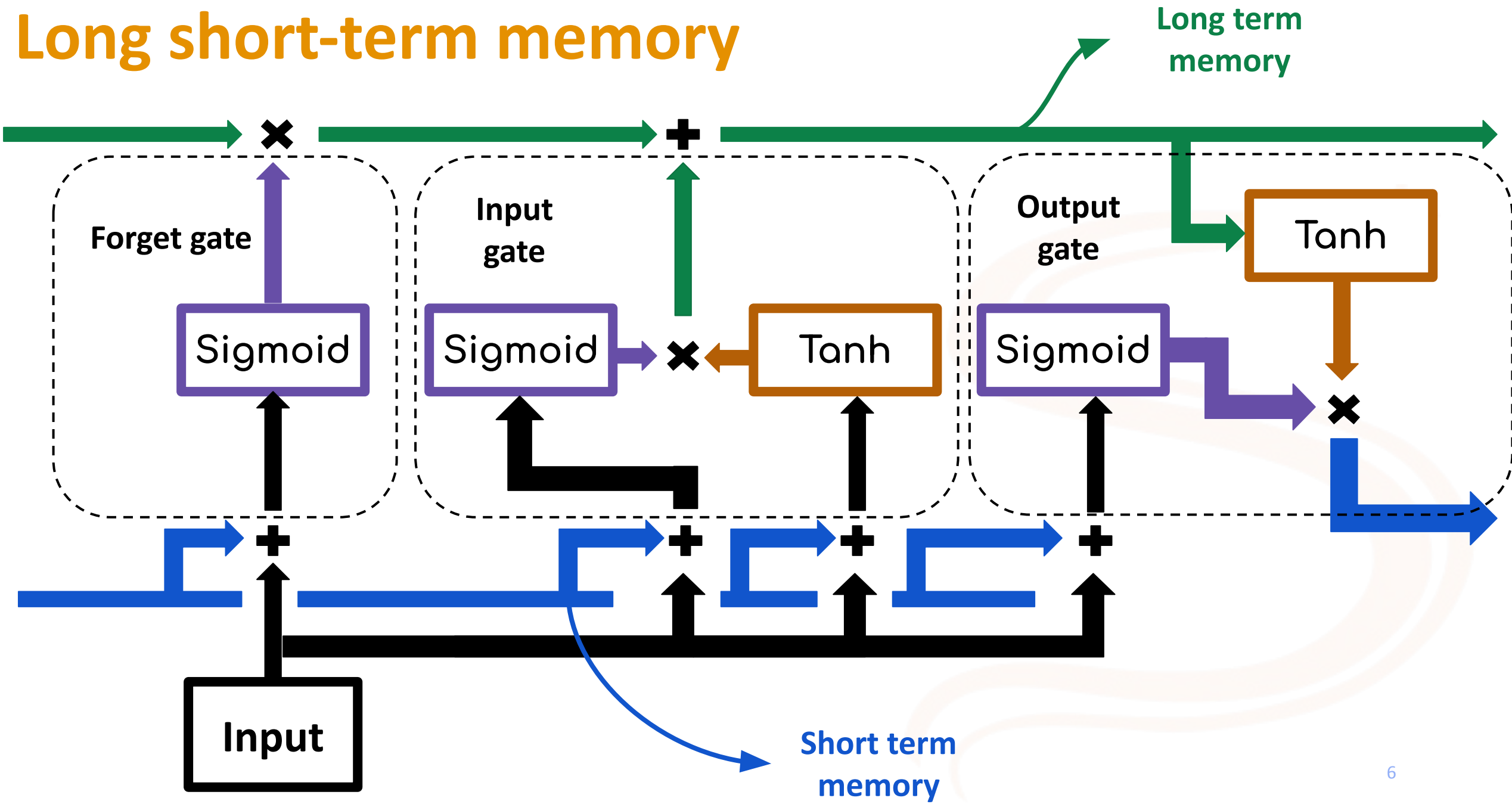
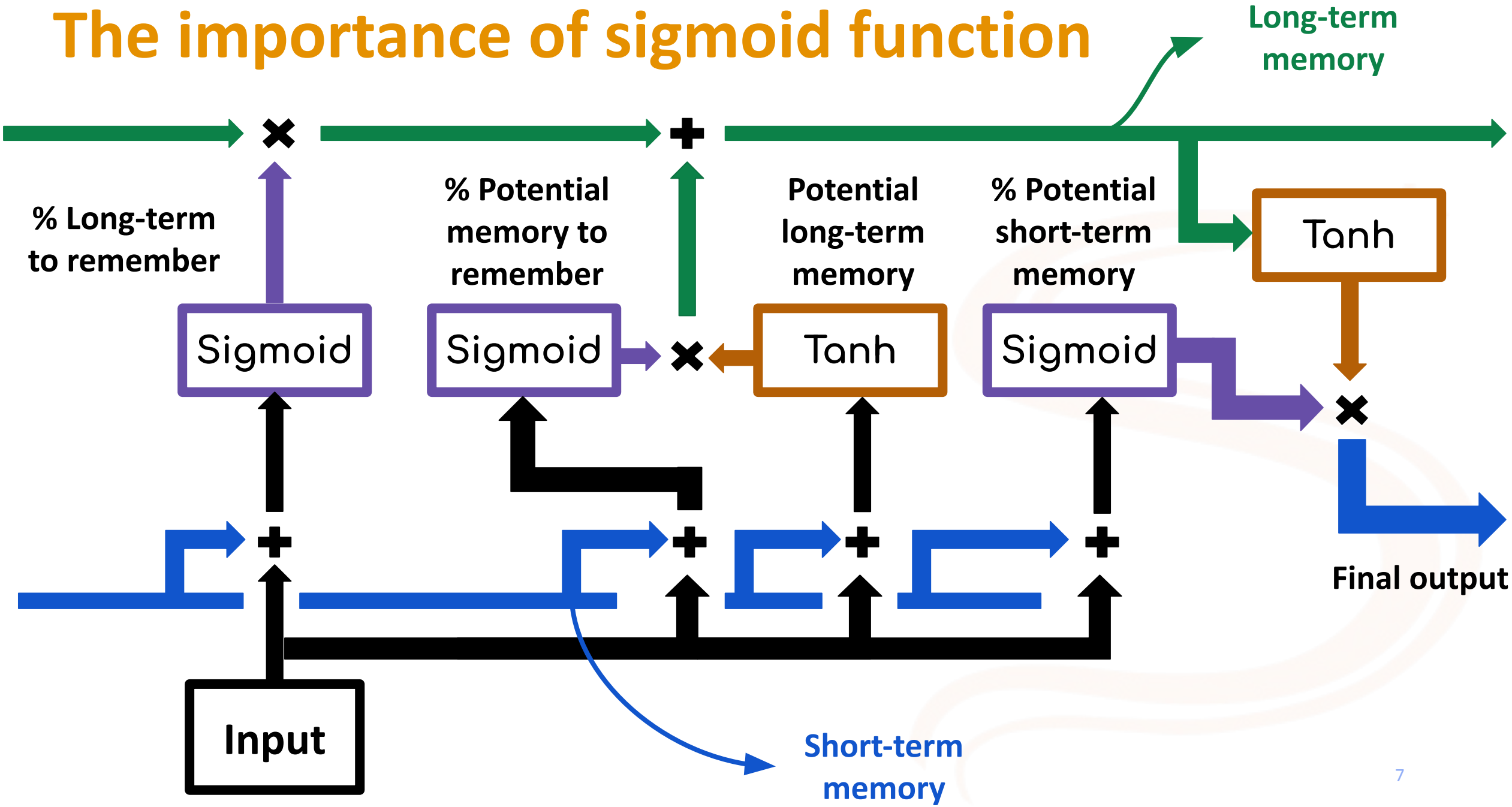
The importance of sigmoid function