SIGNAL	DESCRIPTION
28MHZ	28.63636 MHz(NTSC)/28.37516 MHz(PAL) Master Clock
7MHZ	7 MHz Processor Clock
A[23:1]	Processor Address (68000)
ACK	Data Acknowledge (Parallel)
AS	Address Strobe (68000)
AUDIN	Audio Input (RS232 jack)
AUDOUT	Audio Output (RS232 jack)
BEER	Bus Error (68000)
BG	Bus Grant (68000)
BGACK	Bus Grant Acknowledge (68000)
BLISS	Blitter Slowdown (chips)
BLIT	Chip Memory Access (chips)
BR	Bus Request (68000)
BUSY	Device Busy (parallel)
CASL/CASU	CAS lower/upper byte (DRAM)
CCK	Color Clock aka C1 (chips)
CCKQ	Color Clock Quadrature aka C3 (chips)
CDAC	7 MHz Quatrature Clock
CHNG	Media Change (floppy)
CLKRD/CLKWR	Real-time Clock Read/Write
CSYNC	Composite Sync (video)
CTS	Clear to Send (rs232)
D[15:0]	Processor Data (68000)
DIR	Direction (floppy)
DKRD	Diskette Read Data (floppy)
DKWDB	Diskette Write Data (floppy)
DKWEB	Diskette Write Enable (floppy)
DMAL	Chip DMA Request (chips)
DRA[8:0]	DRAM Address (DRAM, chips)
DRD[15:0]	DRAM Data (DRAM, chips)
DSR	Data Set Ready (rs232)
DTACK	Data Transfer Acknowledge (68000)
DTR	Data Terminal Ready (rs232)
E	Peripheral E Clock (68000)
EXRAM	Expansion Memory Present
FC[0:0]	Function Control (68000)
FIRE0/FIRE1	Fire Button (joysticks)
HLT	Processor Halt (68000)
HSYNC	Horizontal Sync (video)
INDEX	Diskette Index Hole (floppy)
INT[2,3,6]	Interrput Requests (chips)
IORESET	I/O Reset
IPL[2:0]	Processor Interrupt Requests (68000)
KBCLOCK	Keyboard Clock (keyboard)
KBDATA	Keyboard Data (keyboard)
KBRESET	Keyboard Reset (keyboard)
LDS/UDS	Upper/Lower Data Strobe (68000)
LED	Power On LED

SIGNAL	DESCRIPTION
LEFT/RIGHT	Audio Channels
MTR	Motor On (floppy)
MTR0	Motor On Drive (floppy)
M0V/M0H	Mouse Quadrature Signals (joysticks)
M1V/M1H	Mouse Quadrature Signals (joysticks)
OVL	Overlay ROM over RAM
OVR	Override System Decodeing
PIXELSW	Pixel Switch (video)
POT0X/POT0Y	Pot Lines (joysticks)
POT1X/POT1Y	Pot Lines (joysticks)
POUT	Paper Out (parallel)
PPD[7:0]	Parallel Port Data (parallel)
RAMEN	RAM Enable (chips)
REGEN	Chip Register Enable (chips)
RAS0/RAS1	RAS Internal/Expansion Lines (DRAM)
RDY	Drive Ready (floppy)
RESET	General Reset
RGA[8:1]	Register Address Bus (chips)
RI	Ring Indicate (rs232)
ROMEN	ROM Enable
RTS	Request to Send (rs232)
RST	Processor Reset (68000)
RXD	Receive Data (RS232)
RW	Processor Read/Write (68000)
SEL	Select (parallel)
SEL[3:0]	Drive Select (floppy)
SIDE	Side Select (floppy)
STEP	Head Step Command (floppy)
TRK0	Track 0 Sense (floppy)
TXD	Transmit Data (RS232)
VMA	Valid Memory Address (68000)
VPA	Valid Peripheral Address (68000)
VSYNC	Vertic1 Sync (video)
WE	Write Enable (DRAM)
WPROT	Write Protect Sense (floppy)
XCLK	External 28 MHz Clock (genlock)
XCLKEN	External Clock Enable (genlock)
XRDY	External Data Ready
AUDL/AUDR	Amiga Audio Left/Right
AEMP	Audio Deemphasis
AUPLY	CD Audio Play
BAS	Buffered Address Strobe
BCLK	CD Audio Clock
BCSMCEN/BCSMCOD	Buffered Chip Select Memory Card Even/Odd
BRW	Buffered Processor Read/Write
BSEN	Logic Voltage Sense
BTXD	Buffer Transmit Data (Midi)
BLDS/BUDS	Buffered Upper/Lower Data Strobe

SIGNAL	DESCRIPTION
C16M	16MHz Dac Clock
CDAL/CDAR	CD Audio Left/Right
CD/TV	Select CD/TV (see INCD)
CONFIGIN	Config In
CONFIGOUT	Config Out
CSCD	Chip Select CDROM Driver
CSEN/CSOD	Chip Select CDROM Driver Even/Odd
CSMC	Chip Select Memory Card
CSMCEN/CSMCOD	Chip Select Memory Card Even/Odd
CSNV	Non-Volatile Memory Select
CSRC	Real Time Chip Select
CSX0	XT Device Chip Select No.0
DACATT	Attinator Data (Dac)
DACLCH	Attinator Latch (Dac)
DACST	Attinator Strobe (Dac)
DATA	CD Audio Data
DMCD	Dmac Dma Data
EOP.CSX1	End of Process/XT Device Chip Select No.1
GMS[1:0]	Genlock Mode Select (Remote Control)
IFRST	Interface Reset
INAC	Indicator Power/Status
INCD	Indicator CD/TV Mode
INTD	CD Drive Reset
INTS	SCSI Interrupt
IOR/IOW	Dmac Read/Write
KBSE	Keyboard Sense
LMUTE	Line Mute
LRCLK	Audio Left/Right Clock
MPS	Power Sense (Logic)
MS[1:0]	Genlock Mode Select (Amiga)
MUTE	CD Mute
POWER	Main Logic Power On/Off
SD[7:0]	Dmac XT/SCSI Data
VCK	Attinator Data Clock (Head Phone)
VDATA	Attinator Data Clock (Head Phone)
VF[2:1]	Filament Voltage
VST	Attinator Data Clock (Head Phone)
VPP	-30V Voltage
XA,YA,XB,YB[2:1]	Mouse Input Signal
XDACK	XT Device Data Acknowledge
XDREQ	XT Device Data Requirement
EMC	*ENABLE MEMORY CARD*
ECD	*ENABLE CDROM DRIVER (ROM)*
WEPROM	*WRITE ENABLE E² PROM*

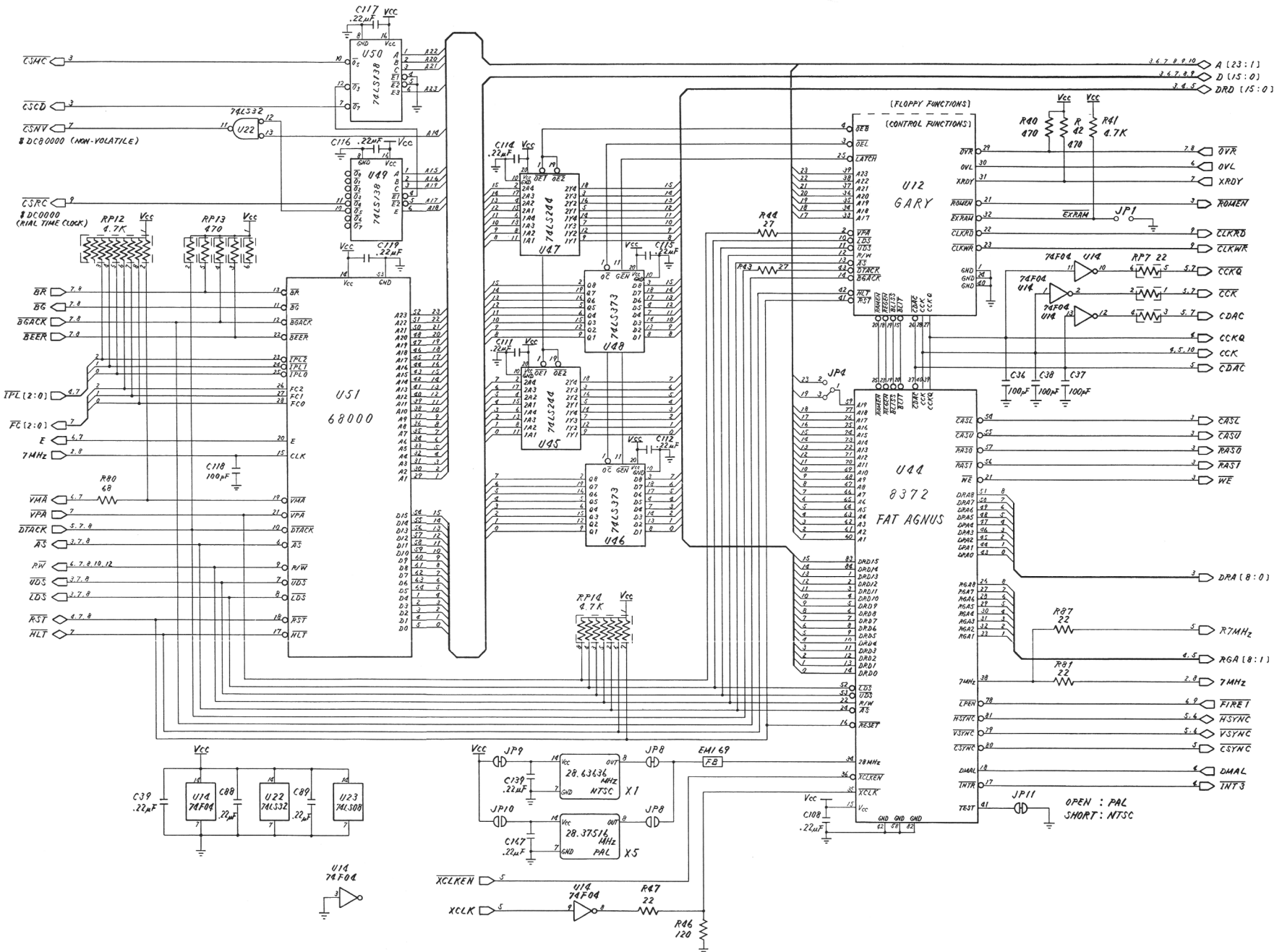
U51
68000
U12
GARY
U44
8372
FAT AGNUS
U50
74LS138
U49
74LS138
U47
74LS244
U45
74LS244
U48
74LS373
U46
74LS373
U22
74LS32
U14
74F04
U23
74LS08
28.63636 MHz
NTSC
X1
28.37516 MHz
PAL
X5
(FLOPPY FUNCTIONS)
(CONTROL FUNCTIONS)
OPEN : PAL
SHORT : NTSC
A [23:1]
D [15:0]
DRD [15:0]
DRA [8:0]
RGA [8:1]
7MHz
R7MHz
FIRE1
HSYNC
VSYNC
CSYNC
DMAL
INT3
CSMC
CSCD
CSNV
$DC80000 (NON-VOLATILE)
CSRC
$DC0000 (RIAL TIME CLOCK)
XCLKEN
XCLK
EM1 69
FB

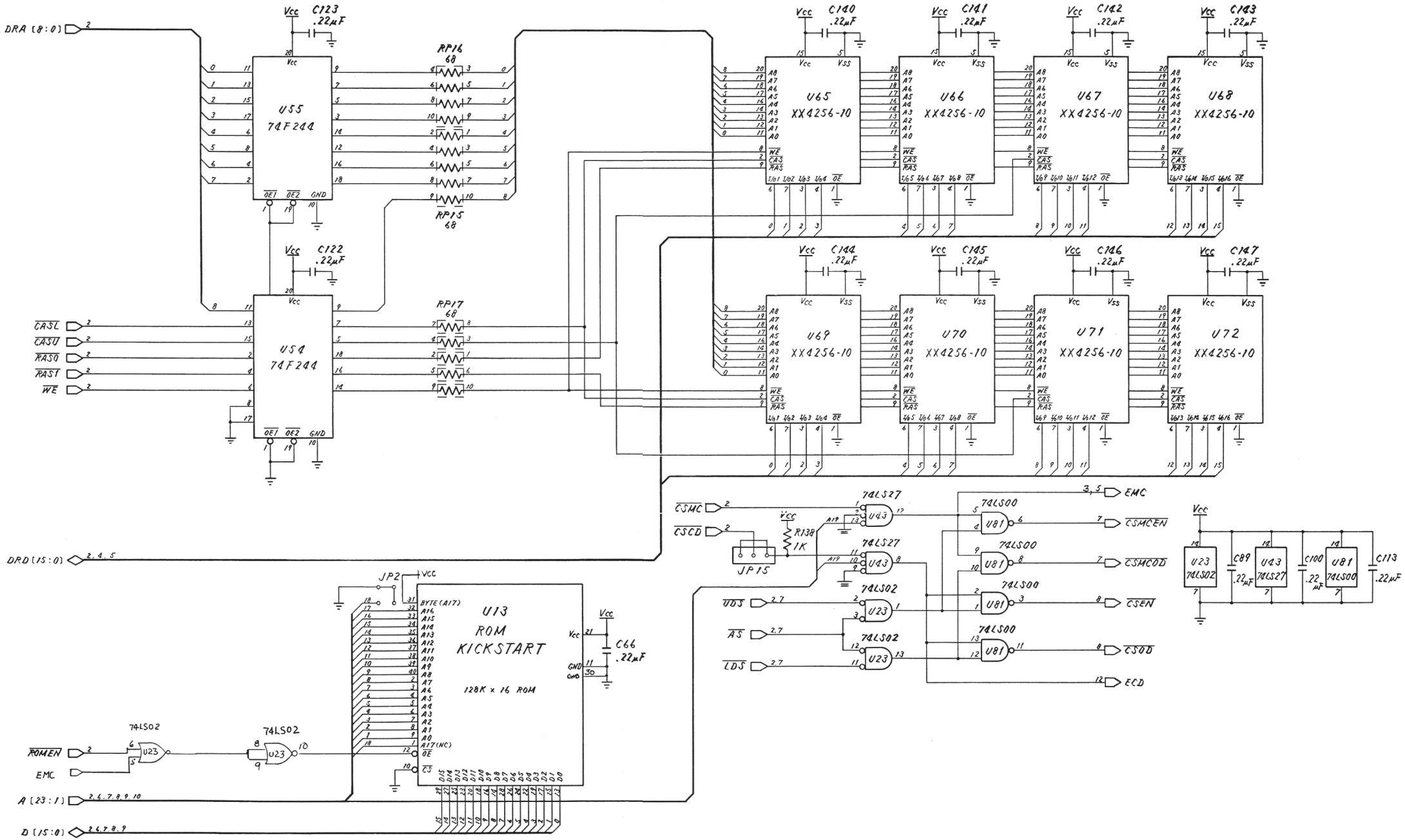
DRA [8:0]
U55 74F244
U54 74F244
RP16 68
RP15 68
RP17 68
C123 .22µF
C122 .22µF
C140 .22µF
C141 .22µF
C142 .22µF
C143 .22µF
C144 .22µF
C145 .22µF
C146 .22µF
C147 .22µF
U65 XX4256-10
U66 XX4256-10
U67 XX4256-10
U68 XX4256-10
U69 XX4256-10
U70 XX4256-10
U71 XX4256-10
U72 XX4256-10
CASL
CASU
RASO
RAST
WE
DRD [15:0]
JP2
U13 ROM KICKSTART
128K x 16 ROM
C66 .22µF
74LS02
ROMEN
EMC
A [23:1]
D [15:0]
CSMC
CSCD
JP15
R138 1K
74LS27
74LS00
UDS
AS
LDS
CSMCEN
CSMCOD
CSEN
CSOD
ECD
C89 .22µF
C100 .22µF
C113 .22µF

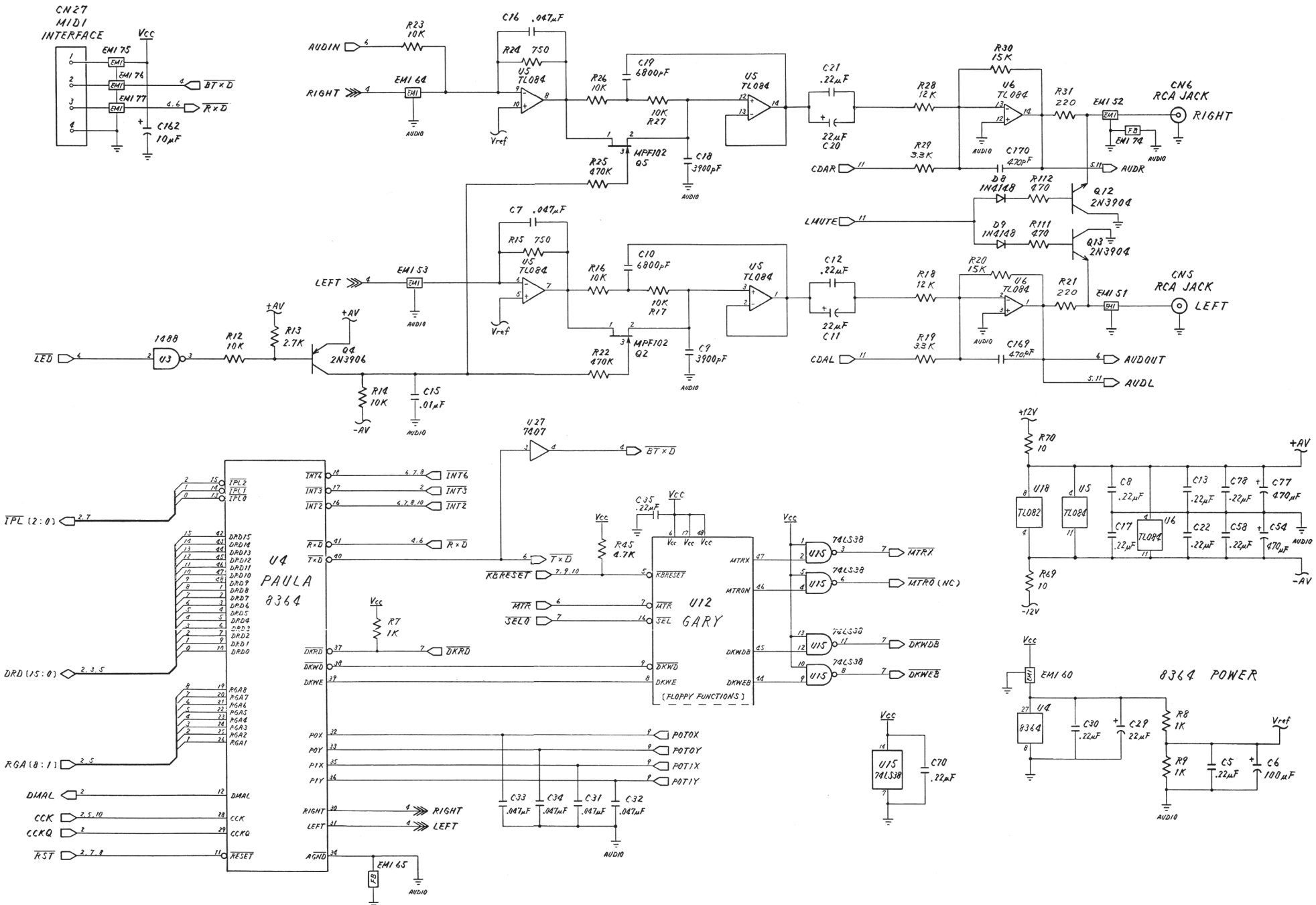
CN27
MIDI
INTERFACE
Vcc
EMI 75
EMI 76
EMI 77
BT x D
R x D
C162
10µF
AUDIN
RIGHT
R23
10K
EMI 64
C16 .047µF
R24 750
U5
TL084
Vref
R26
10K
C19
6800pF
10K
R27
MPF102
Q5
C18
3900pF
R25
470K
U5
TL084
C21
.22µF
22µF
C20
R28
12K
R30
15K
U6
TL084
R31
220
EMI 52
CN6
RCA JACK
RIGHT
FB
EMI 74
C170
470pF
CDAR
R29
3.3K
AUDR
D8
1N4148
R112
470
Q12
2N3904
LMUTE
D9
1N4148
R111
470
Q13
2N3904
LEFT
EMI 53
C7 .047µF
R15 750
R16
10K
C10
6800pF
10K
R17
C12
.22µF
22µF
C11
R18
12K
R20
15K
R21
220
EMI 51
CN5
RCA JACK
LEFT
R19
3.3K
C169
470pF
CDAL
AUDOUT
AUDL
LED
1488
U3
R12
10K
+AV
R13
2.7K
Q4
2N3906
MPF102
Q2
R22
470K
C9
3900pF
R14
10K
-AV
C15
.01µF
AUDIO
U27
7407
BT x D
U4
PAULA
8364
INT6
INT3
INT2
R x D
T x D
DKRD
DKWD
DKWE
POX
POY
PIX
PIY
RIGHT
LEFT
AGND
EMI 65
IPL (2:0)
DRD (15:0)
RGA (8:1)
DMAL
CCK
CCKQ
RST
RESET
U12
GARY
KBRESET
MTR
SEL0
SEL
MTRX
MTRON
DKWDB
DKWEB
(FLOPPY FUNCTIONS)
R45
4.7K
R7
1K
C35
.22µF
74LS38
U15
MTRX
MTRO (NC)
DKWDB
DKWEB
POTOX
POTOY
POTIX
POTIY
C33
C34
C31
C32
.047µF
C70
.22µF
+12V
-12V
R70
10
R69
10
U18
TL082
U5
TL084
U6
C8
C13
C78
C77
470µF
C17
C22
C58
C54
.22µF
8364 POWER
EMI 60
U4
8364
C30
C29
22µF
R8
1K
R9
1K
C5
C6
100µF
Vref

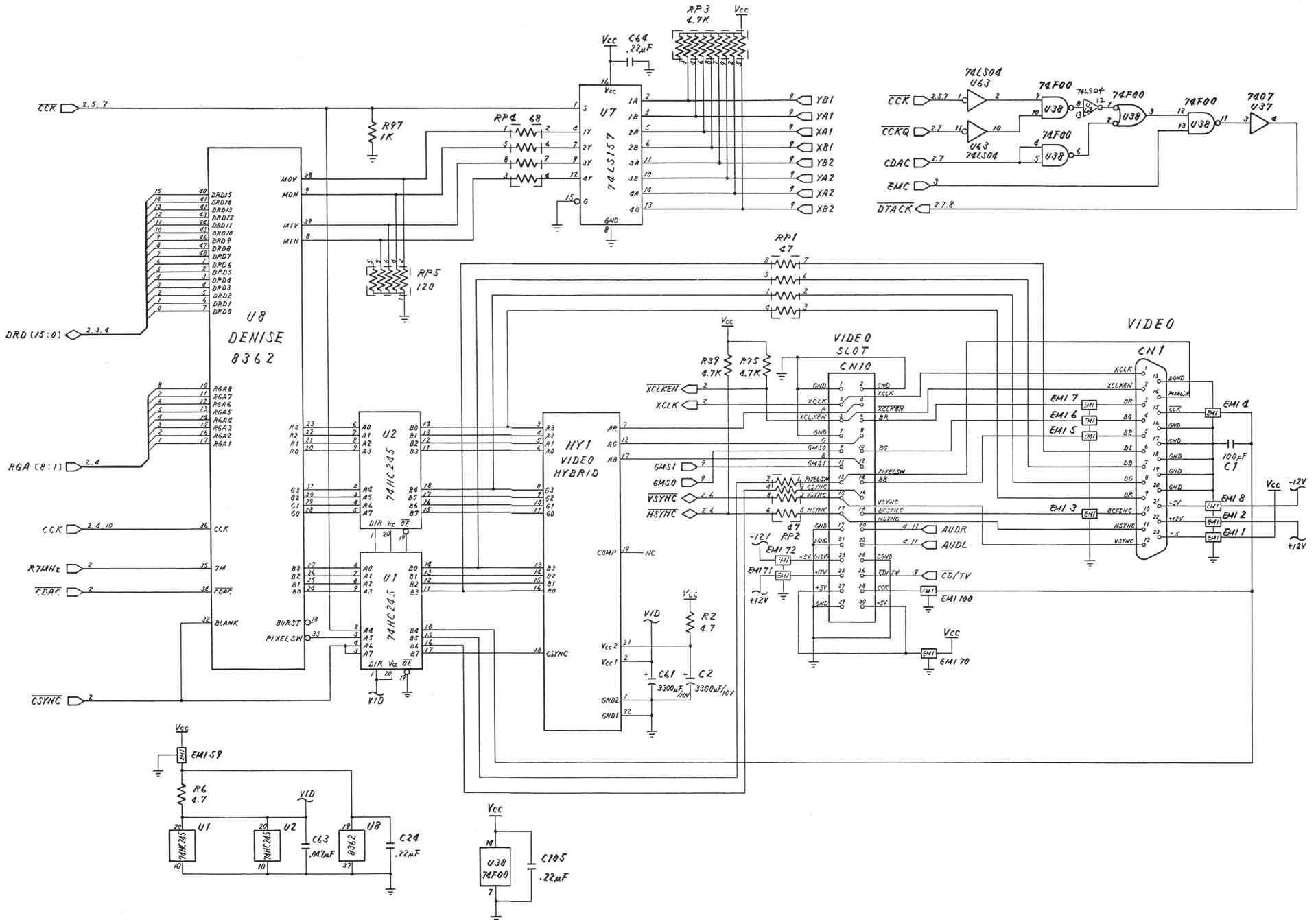
U8
DENISE
8362
U7
74LS157
U2
74HC245
U1
74HC245
HY1
VIDEO
HYBRID
VIDEO
SLOT
CN10
VIDEO
CN1
74LS04
U63
74F00
U38
7407
U37
RP3
4.7K
RP4
68
RP5
120
RP1
47
R97
1K
R39
4.7K
R75
4.7K
R2
4.7
C61
3300µF/10V
C2
3300µF/10V
C64
.22µF
C105
.22µF
C63
.047µF
C24
.22µF
R6
4.7
EMI 59
EMI 100
EMI 70
EMI 72
EMI 71
EMI 4
EMI 8
EMI 2
EMI 1
EMI 7
EMI 6
EMI 5
EMI 3
100pF
C1
DRD (15:0)
RGA (8:1)
CCK
R7MHz
CDAC
CSYNC
XCLKEN
XCLK
GMS1
GMS0
VSYNC
HSYNC
AUDR
AUDL
CD/TV
DTACK
EMC
CCKQ
YB1
YA1
XA1
XB1
YB2
YA2
XA2
XB2
BURST
PIXELSW
VID
Vcc
-12V
+12V

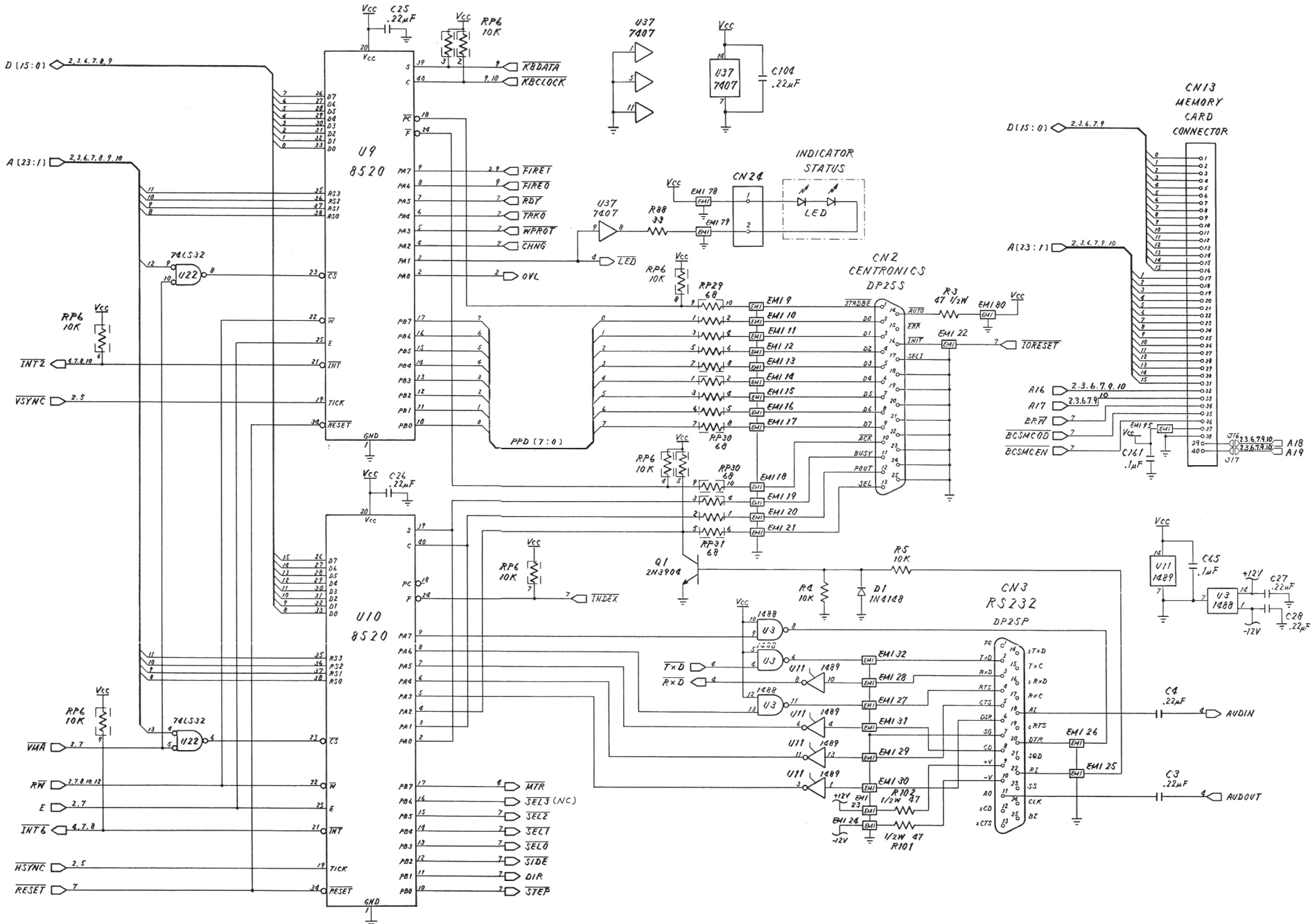
U9
8520
U10
8520
CN2
CENTRONICS
DP25S
CN3
RS232
DP25P
CN13
MEMORY
CARD
CONNECTOR
INDICATOR
STATUS
LED
CN24
PPD (7:0)
KBDATA
KBCLOCK
FIRE1
FIRE0
RDY
TRK0
WPROT
CHNG
OVL
INDEX
MTR
SEL3 (NC)
SEL2
SEL1
SEL0
SIDE
DIR
STEP
IORESET
AUDIN
AUDOUT
Q1
2N3904
D1
1N4148
R5
10K
R4
10K
R3
47 1/2W
R88
33
R102
1/2W 47
R101
1/2W 47
C25
.22µF
C26
.22µF
C104
.22µF
C161
.1µF
C65
.1µF
C27
.22µF
C28
.22µF
C4
.22µF
C3
.22µF
74LS32
U22
U37
7407
U11
1489
U3
1488
RP6
10K
RP29
68
RP30
68
RP31
68
INT2
VSYNC
VMA
RW
E
INT6
HSYNC
RESET
D (15:0)
A (23:1)
A16
A17
BRW
BCSMCOD
BCSMCEN
A18
A19
+12V
-12V
Vcc
GND

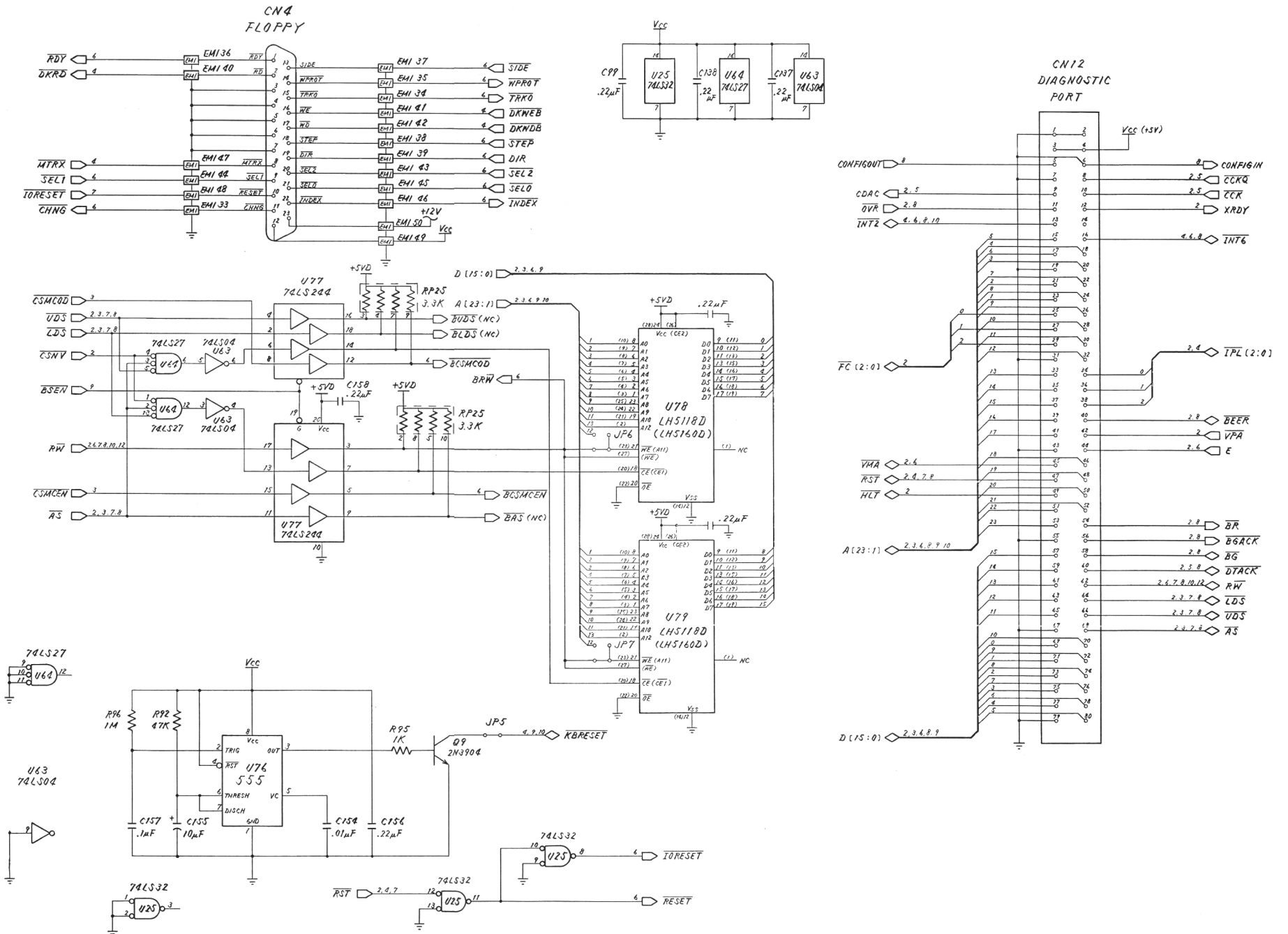
CN4
FLOPPY
CN12
DIAGNOSTIC
PORT
U77
74LS244
U78
LH5118D
(LH5160D)
U79
LH5118D
(LH5160D)
U76
555
U63
74LS04
U64
74LS27
U25
74LS32
Q9
2N3904
JP5
JP6
JP7
RP25
3.3K
R96
1M
R92
47K
R95
1K
C157
.1µF
C155
10µF
C154
.01µF
C156
.22µF
C158
.22µF
C99
.22µF
C138
.22µF
C137
.22µF
+5VD
+12V
Vcc
Vcc (+5V)
RDY
DKRD
MTRX
SEL1
IORESET
CHNG
SIDE
WPROT
TRKO
DKWEB
DKWDB
STEP
DIR
SEL2
SEL0
INDEX
CSMCOD
UDS
LDS
CSNV
BSEN
RW
CSMCEN
AS
BUDS (NC)
BLDS (NC)
BCSMCOD
BRW
BCSMCEN
BAS (NC)
D (15:0)
A (23:1)
CONFIGOUT
CDAC
OVR
INT2
FC (2:0)
VMA
RST
HLT
CONFIGIN
CCKQ
CCK
XRDY
INT6
IPL (2:0)
BEER
VPA
E
BR
BGACK
BG
DTACK
RW
LDS
UDS
AS
KBRESET
RESET

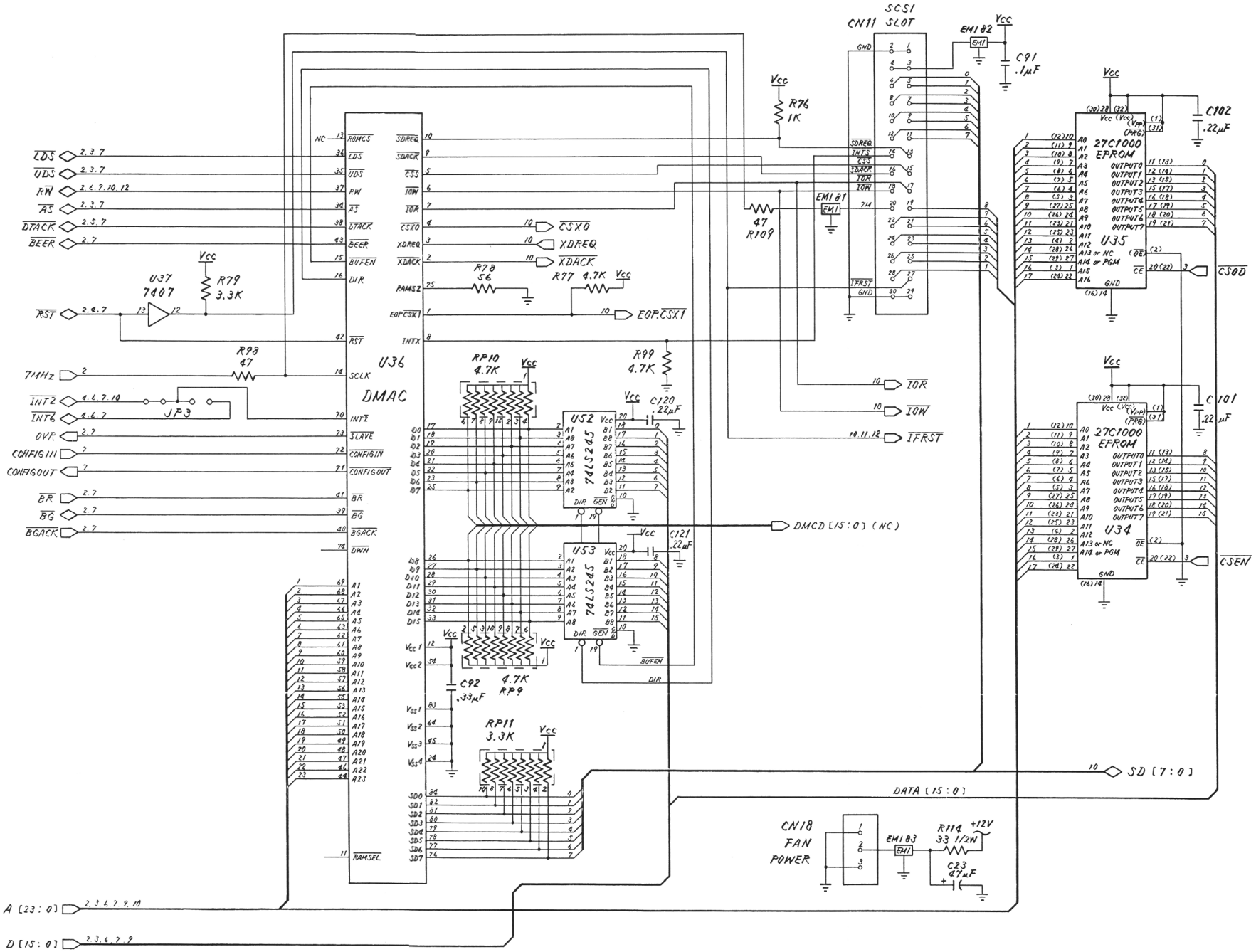
SCSI
CN11 SLOT
EMI 82
C91
.1µF
R76
1K
C102
.22µF
27C1000
EPROM
U35
CSOD
EMI 81
47
R109
LDS
UDS
RW
AS
DTACK
BEER
RST
U37
7407
R79
3.3K
R78
56
R77 4.7K
CSX0
XDREQ
XDACK
EOP.CSX1
R98
47
7MHz
INT2
INT6
JP3
OVR
CONFIGIN
CONFIGOUT
BR
BG
BGACK
U36
DMAC
RP10
4.7K
R99
4.7K
U52
74LS245
C120
.22µF
IOR
IOW
IFRST
C101
.22µF
U34
CSEN
DMCD [15:0] (NC)
U53
74LS245
C121
.22µF
C92
.33µF
4.7K
RP9
RP11
3.3K
SD [7:0]
DATA [15:0]
CN18
FAN
POWER
EMI 83
R114
33 1/2W
+12V
C23
47µF
A [23:0]
D [15:0]

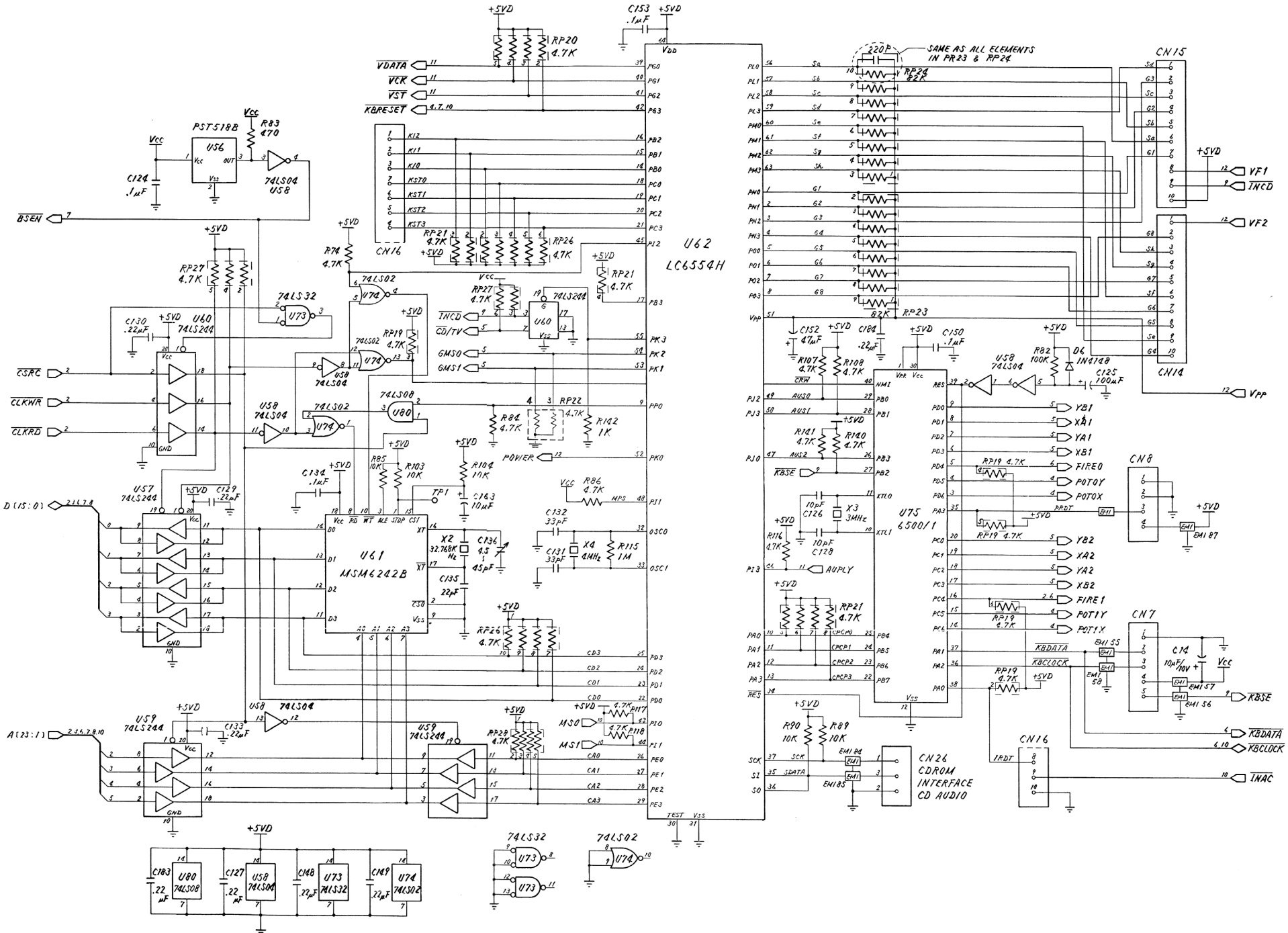
U62
LC6554H
U61
MSM6242B
U75
6500/1
CN15
CN14
CN16
CN8
CN7
CN26
CDROM
INTERFACE
CD AUDIO
SAME AS ALL ELEMENTS
IN PR23 & RP24
VDATA
VCK
VST
KBRESET
BSEN
CSRC
CLKWR
CLKRD
D (15:0)
A (23:1)
VF1
INCD
VF2
VPP
KBSE
KBDATA
KBCLOCK
INAC
POWER
AUPLY
MS0
MS1
+5VD
Vcc

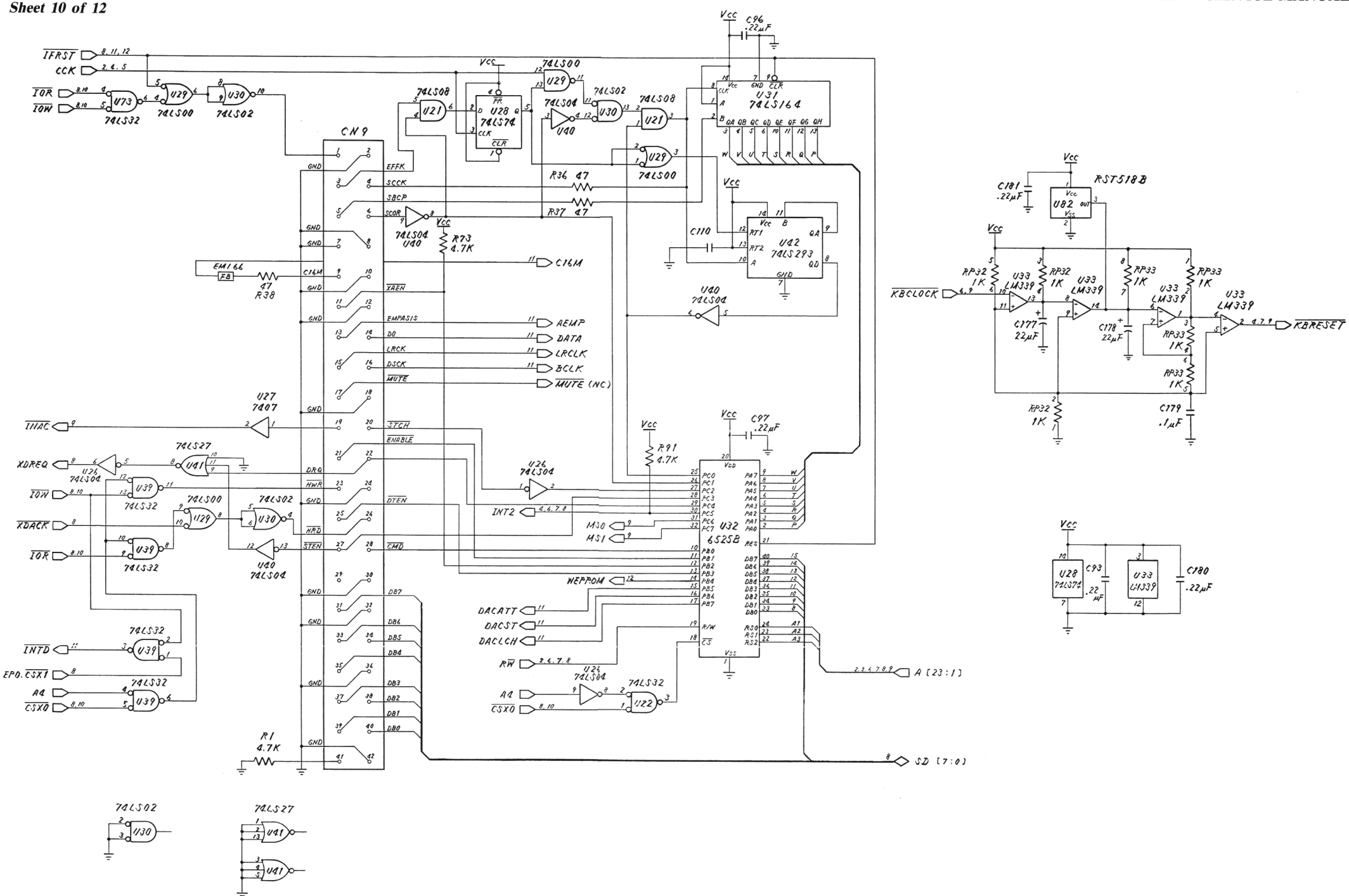
IFRST
CCK
IOR
IOW
74LS32
74LS00
74LS02
74LS08
74LS74
74LS04
74LS293
74LS164
CN9
EFFK
SCCK
SBCP
SCOR
R36 47
R37 47
R73 4.7K
C16M
EM166
FB
R38 47
XAEN
EMPASIS
DO
LRCK
DSCK
MUTE
AEMP
DATA
LRCLK
BCLK
MUTE (NC)
INAC
XDREQ
XDACK
INTD
EPO. CSX1
A4
CSX0
STCH
ENABLE
DRQ
HWR
DTEN
HRD
STEN
CMD
DB7
DB6
DB5
DB4
DB3
DB2
DB1
DB0
R1 4.7K
INT2
MS0
MS1
WEPROM
DACATT
DACST
DACLCH
RW
A [23:1]
SD [7:0]
C96 .22µF
C97 .22µF
C110
R91 4.7K
U31 74LS164
U42 74LS293
U32 6525B
U26 74LS04
U27 7407
U28 74LS74
U33 LM339
U82 RST518B
C181 .22µF
C177 22µF
C178 22µF
C179 .1µF
C93 .22µF
C180 .22µF
RP32 1K
RP33 1K
KBCLOCK
KBRESET
74LS27
74LS02
74LS27

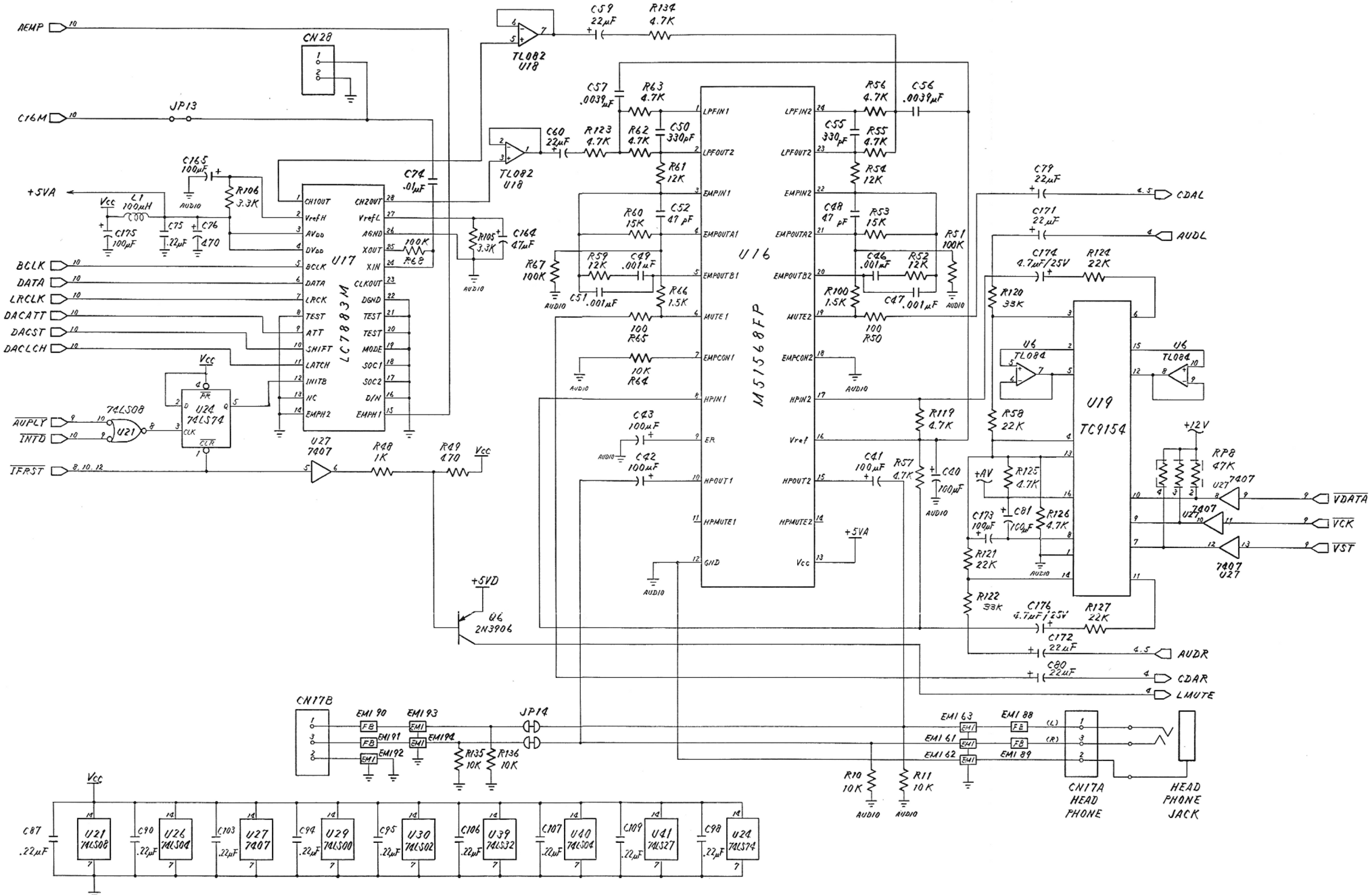
AEMP
C16M
JP13
CN28
TL082 U18
C59 22µF
R134 4.7K
C57 .0039µF
R63 4.7K
C60 22µF
R123 4.7K
R62 4.7K
C50 330pF
R61 12K
C74 .01µF
C165 100µF
R106 3.3K
+5VA
L1 100µH
C175 100µF
C75 .22µF
C76 470
R105 3.3K
C164 47µF
R68 100K
BCLK
DATA
LRCLK
DACATT
DACST
DACLCH
U17 LC78833M
CH1OUT
VrefH
AVDD
DVDD
BCLK
DATA
LRCK
TEST
ATT
SHIFT
LATCH
INITB
NC
EMPH2
CH2OUT
VrefL
AGND
XOUT
XIN
CLKOUT
DGND
TEST
TEST
MODE
SOC1
SOC2
D/N
EMPH1
U16 M51568FP
LPFIN1
LPFOUT2
EMPIN1
EMPOUTA1
EMPOUTB1
MUTE1
EMPCON1
HPIN1
ER
HPOUT1
HPMUTE1
GND
LPFIN2
LPFOUT2
EMPIN2
EMPOUTA2
EMPOUTB2
MUTE2
EMPCON2
HPIN2
Vref
HPOUT2
HPMUTE2
Vcc
R56 4.7K
C56 .0039µF
C55 330pF
R55 4.7K
R54 12K
C48 47 pF
R53 15K
C46 .001µF
R52 12K
C47 .001µF
R51 100K
R100 1.5K
100 R50
R60 15K
C52 47 pF
R59 12K
C49 .001µF
C51 .001µF
R66 1.5K
R67 100K
100 R65
10K R64
C43 100µF
C42 100µF
C41 100µF
R57 4.7K
C40 100µF
R119 4.7K
C79 22µF
C171 22µF
C174 4.7µF/25V
R124 22K
R120 33K
R58 22K
R125 4.7K
C173 100µF
C81 100µF
R126 4.7K
R121 22K
R122 33K
C176 4.7µF/25V
R127 22K
C172 22µF
C80 22µF
CDAL
AUDL
AUDR
CDAR
LMUTE
U19 TC9154
U6 TL084
+12V
RP8 47K
U27 7407
VDATA
VCK
VST
AUPLY
INTD
IFRST
74LS08 U21
U24 74LS74
U27 7407
R48 1K
R49 470
Vcc
U6 2N3906
+5VD
CN17B
EMI90
EMI91
EMI92
EMI93
EMI94
JP14
R135 10K
R136 10K
EMI63
EMI61
EMI62
EMI88
EMI89
R10 10K
R11 10K
CN17A HEAD PHONE
HEAD PHONE JACK
C87 .22µF
U21 74LS08
C90 .22µF
U26 74LS04
C103 .22µF
U27 7407
C94 .22µF
U29 74LS00
C95 .22µF
U30 74LS02
C106 .22µF
U39 74LS32
C107 .22µF
U40 74LS04
C109 .22µF
U41 74LS27
C98 .22µF
U24 74LS74
AUDIO

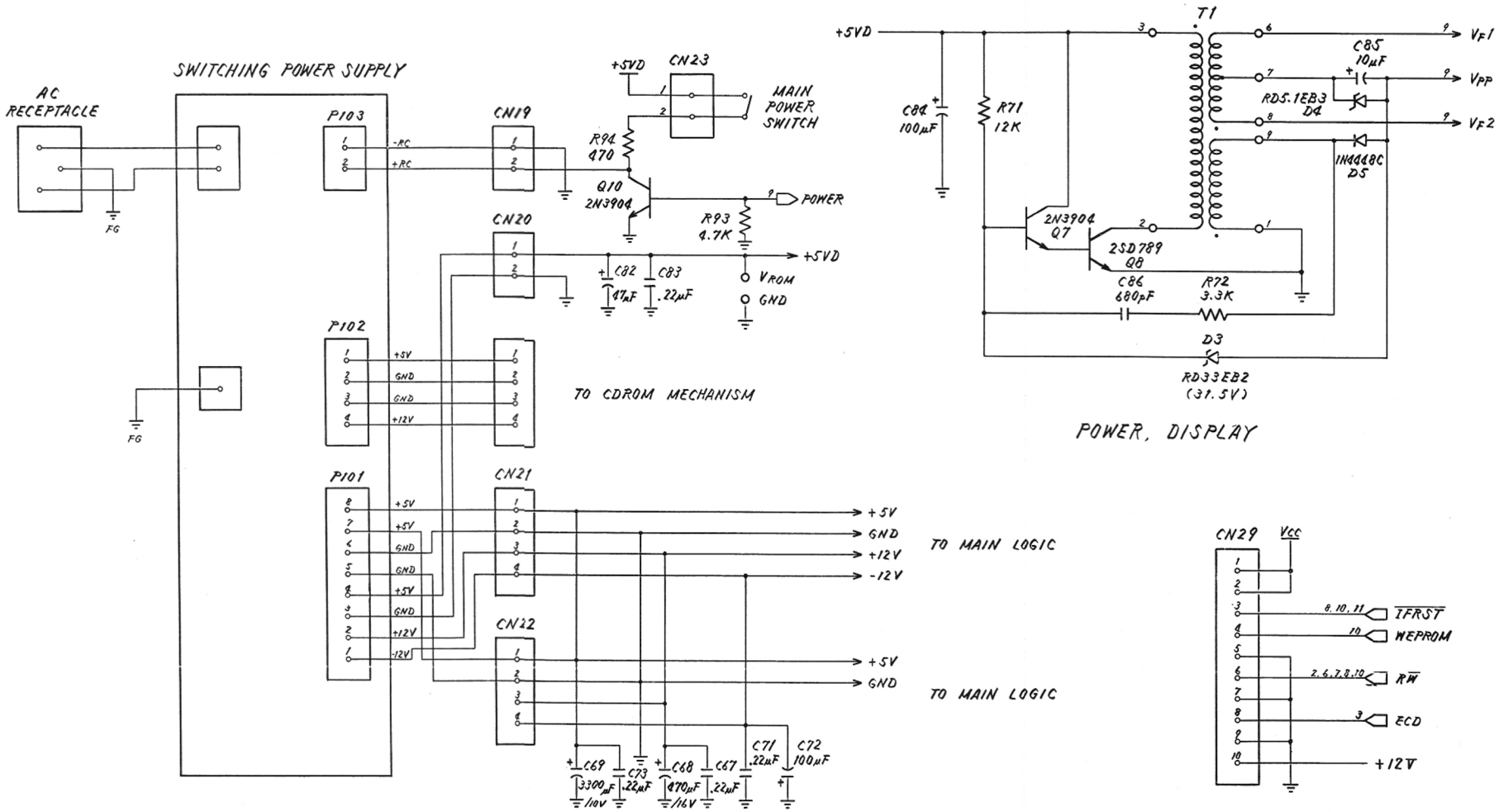
SWITCHING POWER SUPPLY
AC RECEPTACLE
FG
P103
-AC
+AC
CN19
+5VD
CN23
MAIN POWER SWITCH
R94 470
Q10 2N3904
POWER
R93 4.7K
CN20
+5VD
C82 47μF
C83 .22μF
VROM
GND
P102
+5V
GND
GND
+12V
TO CDROM MECHANISM
P101
CN21
+5V
+5V
GND
GND
+5V
GND
+12V
-12V
+5V
GND
+12V
-12V
TO MAIN LOGIC
CN22
+5V
GND
TO MAIN LOGIC
C69 3300μF/10V
C73 .22μF
C68 470μF/16V
C67 .22μF
C71 .22μF
C72 100μF
T1
+5VD
C84 100μF
R71 12K
C85 10μF
RD5.1EB3 D4
1N4448C D5
VF1
VPP
VF2
2N3904 Q7
2SD789 Q8
C86 680pF
R72 3.3K
D3
RD33EB2 (31.5V)
POWER, DISPLAY
CN29
Vcc
8, 10, 11
IFRST
10
WEPROM
2, 6, 7, 8, 10
R/W
3
ECD
+12V