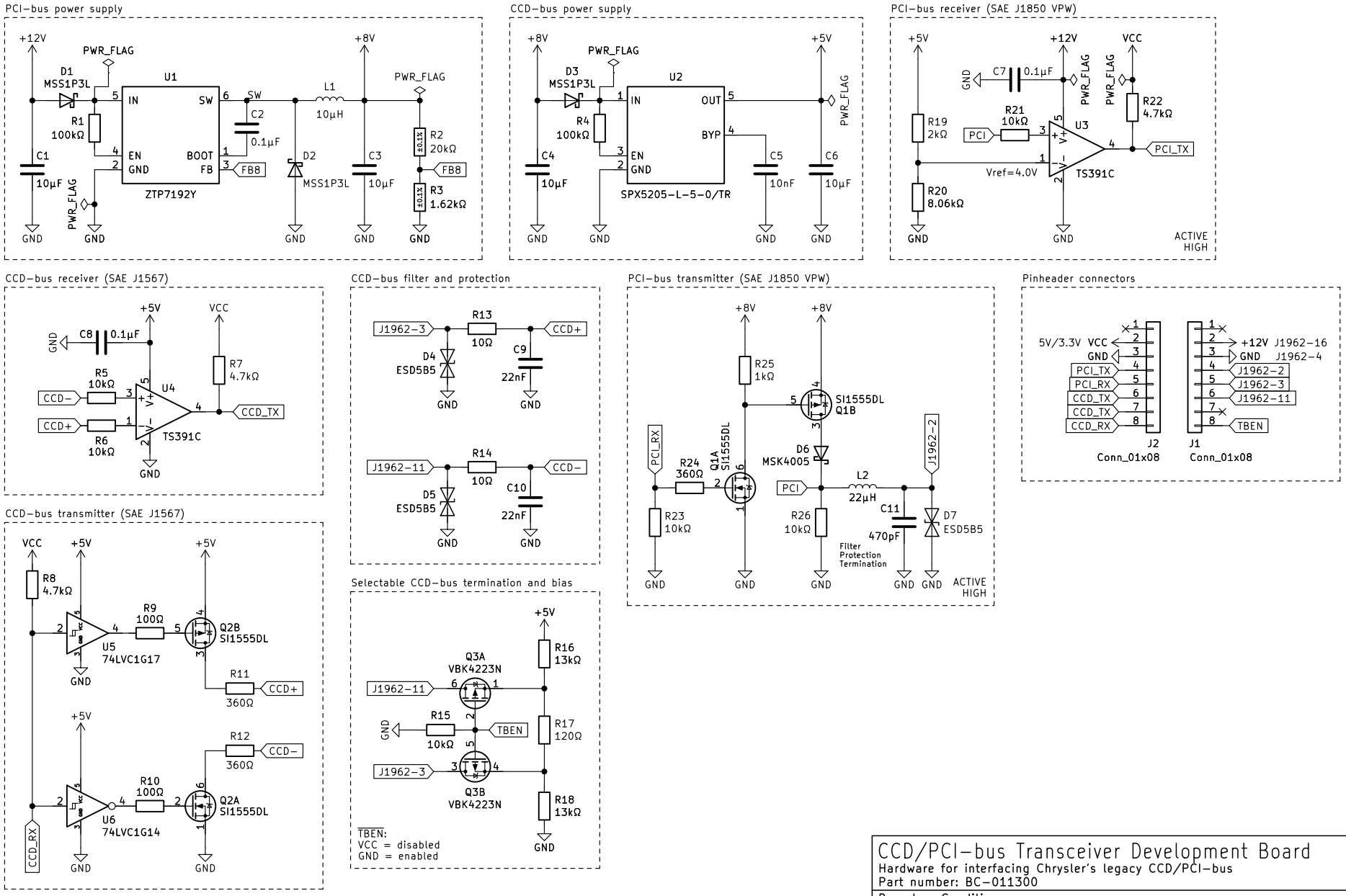


# CCD/PCI-bus Transceiver Development Board

Hardware for interfacing Chrysler's legacy CCD/PCI-bus

Part number: BC-011300

Boundary Condition
https://chryslerccdsci.wordpress.com/

BOUNDARY CONDITION

Sheet: /
File: CCDPCIBusTransceiver_V300.kicad_sch

Author: Daniel Laszlo

| | | |
|---|---|---|
| Size: A4 | Date: 2023-02-07 | Rev: 3.0.0-1 |
| KiCad E.D.A. kicad (6.0.10) | | Page: 1/1 |