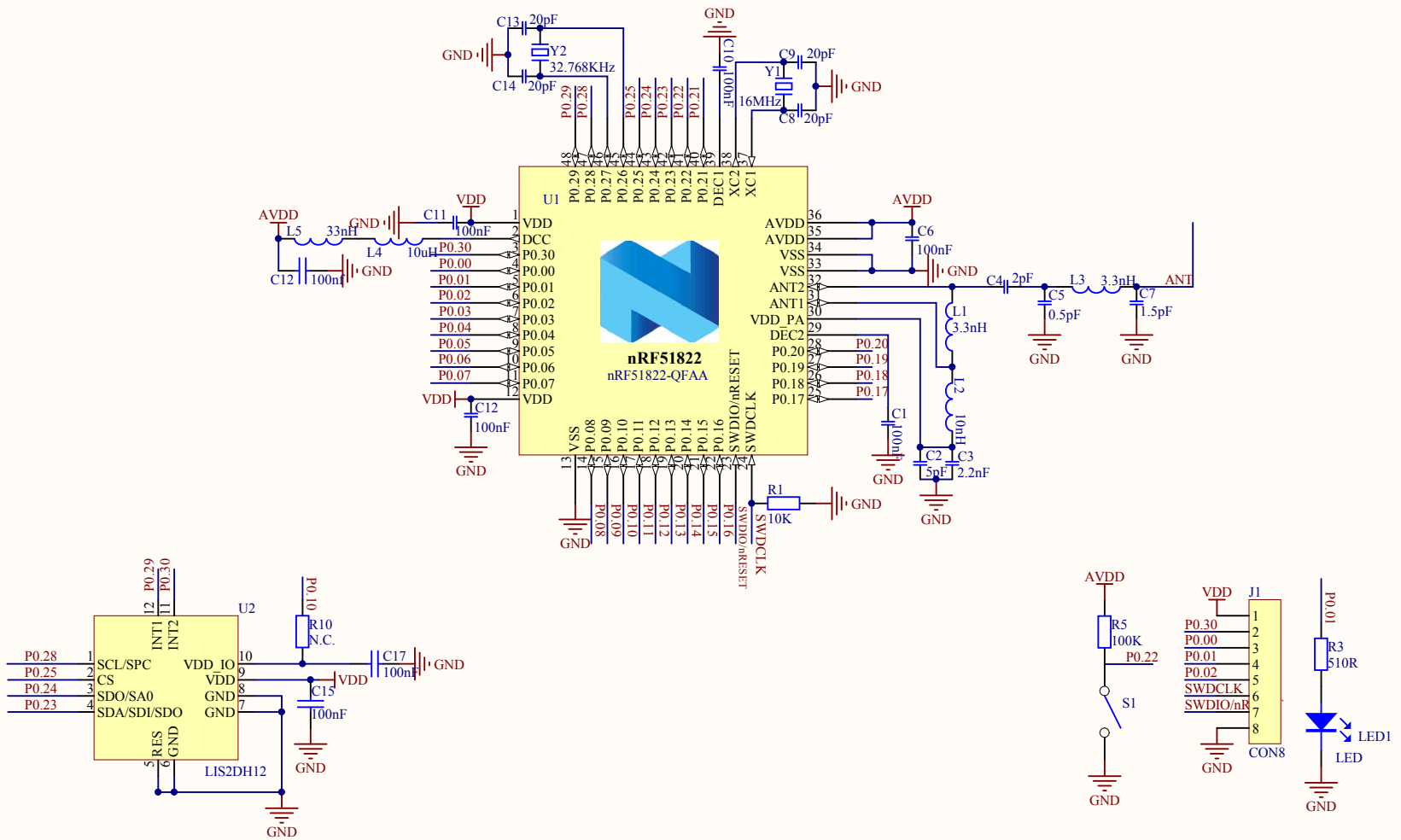

Title		
YJ-16009-IBEACON		
Size A4	Number	Revision
Date: 2018-12-02		Sheet of
File: C:\Users\..\YJ-16009-IBEACON.SCH		Drawn By: