Indian Journal of Microprocessors and Microcontroller (IJMM)
ISSN: 2582-8835 (Online), Volume-1 Issue-2, September 2021

Automatic Sprinkler System using Arduino.

G M Barbade, Mahajan Vasudha, Pasarge Sanika, Shinde Sandhya

***Abstract:** This paper focuses on a smart sprinkler irrigation system that is less costly and any farmer used in farm division. In 21century where automation is playing the most important role in the life of human. Automation allows us to control Appliances with automatic control. Automation gives comfort, Increase efficiency as well as save time. Nowadays, most of the industries are used Automation and control mechanism which is expensive for cost and does not suitable for use in a farm sector.*

In present days, food shortage and water shortages Occur due to the increase in population. To avoid the problem. we have to encourage the agriculture sector. Water Wastage is more in the farming sector. Watering the agricultural fields through irrigation by using this type of method we can save water. In this project, we make an automatic plant sprinkler irrigation system that has to be designed. The system consist relay, Arduino and moisture sensor. The moisture sensor senses the dryness and wetness of the soil. Then Arduino works as per instruction of moisture sensor and system control by Arduino UNO. This project design and development of an automatic plant watering system that is being used to protect a plant because of the reason that doesn't get enough water for its growth. In everyday work related to gardening, watering is the most important work. The system created an automatic Plant watering system to minimize manual activities and making gardener's work easier.

***Keywords:** Arduino, Relay, Sprinkler hub, solenoid valve, soil moisture Sensor.*

I. INTRODUCTION

Water is required for daily purpose In the farming field, water will be required. wastage of water is the major problem in farming there is a different method to save water. Plants are very helpful to all living things. Plants help for environment clean and making oxygen.

In India, people depend upon the farming sector. In the summer farming production is decrease and the cost of the product is increased significantly in monsoon the production is increase and cost will be decreased. It causes farmers to be disappointing. This effect because of lack of water. different type of technique is available to save wastage of water. Automation plays a major role in the present days.

Manuscript received on June 04, 2021.
Revised Manuscript received on July 03, 2021.
Manuscript published on September 10, 2021.
* Correspondence Author

Mr. G. M. Barbade, Lecturer, Department of Electrical, Government Polytechnic, Nanded.

Miss. Mahajan Vasudha Ganesh, Student, Department of Electrical, Government Polytechnic, Nanded. Email: vasudhamahajan2002@gmail.com

Miss. Pasarge Sanika Shivraj, Student, Department of Electrical, Government Polytechnic, Nanded. Email: Sanikapasarge103@gmail.com

Miss. Shinde Sandhya Bharat*, Student, Department of Electrical, Government Polytechnic, Nanded. Email: sandhyashinde858@gmailcom

© The Authors. Published by Lattice Science Publication (LSP). This is an open access article under the CC BY-NC-ND license (http://creativecommons.org/licenses/by-nc-nd/4.0/)

Hence, An automatic sprinkler irrigation system works both in the season i.e monsoon as well as summer. The device used an Arduino Uno programmed based on the detection of soil moisture sensor. Arduino works as a microcontroller which controls all system. The system controls the automatic watering of the plant. The system consists of the relay module which works as a switch by using the relay we can switch on or off the motor/pump. The system also consists moisture sensor which works as a sensor. It can sense the dryness and wetness of the soil.

If the soil was dry, the sensor senses the moisture level and sends the signal to Arduino and the system automatically watered the plant and If the soil was wet, the sensor sense wetness and send the signal to Arduino and the system will be stopped. By using automation we can handle the system easily and human work will easy. Because of this, we save the water and growth of the plant will healthy.

II. LITERATURE REVIEW

There is a lot of research paper that have worked automatic sprinkler system using Arduino.

Subhash Ghosh represents "smart drip irrigation system using the cloud, Android and data mining". **[1]**

They are used in Microcontroller based programming and also used with an application using the concept of cloud and data mining moisture sensor says the reading from the farm and web application is easy to handle the farmer in the 16 Cloud Computing are used sensor change the data and send the reading to microcontroller and microcontrollers and the farm these readings Display Android phone for PC also the mobile is connected to the database through the cloud.

Abhinav Rajpal "Microcontroller based Automatic irrigation system with Moisture Sensors". **[2]**

The system used provides a reading of the temperature of the atmosphere along with the humidity contained in the soil. Arduino receives the signal of the moisture sensors this is achieved by the two stiffs is also connected to a microcontroller to display soil and water pump status by usinga too stiff metallic rod inserted into the field this is the sensing arrangement for the system.

Md. Wasi-ur-Rahman represent Design system based on order no GSM module and moisture sensor. **[3]**

This system consists of 9 hardware parts that illustrate the mechanism of the system in terms of sending SMS from the Mobile Phone (MP) to the Arduino Board (AB) for controlling the Water Pump (WP), as well as receiving alert messages from the AB.Hardware components are connected to Arduino Mega via wires, and the Arduino platform supplied by a 5V DC adapter

© Copyright: All rights reserved.

***Y. Qiu and G. Meng represent, "The Effect of Water Saving and Production Increment by Drip Irrigation Schedules."* [4]**

This paper focuses on an automated drip irrigation system designed to operate based on soil moisture content as detected by soil moisture sensors.

The microcontroller is placed in each row. In this system RF24L01 is used as transceivers it used because the operator is situated very long from the system

***Ipin prasojan Andino maseleno represent the "Design of Automatic watering system based on aurdino.*[5]**

The author implements the system by using a soil moisture sensor, microcontrollers and solenoid valve. By using electric magnet principal the valve is operated. Moisture sensor sense then sends to the reading aurdino. By referring to the reading solenoid valve is operate it means the water supply is off or ON.For this system atmega, 328 used.

***Kriti Taneja and Amit Bhatia, "automatic irrigation system using Arduino."*[6]**

Author implement the system which is based upon aurdino, moisture sensor and water level sensor. moisture sensor sense and then WSN through transfer. The threshold value has been set in the moisture sensor. By sensing this valued process will start.LCD is connected for reading of sensor by referring moisture sensor pump will off / on

***Sahana D Gowda and Dr Minavati. "Smart irrigation system and pest detection using IoT."*[7]**

The author implements the system based on smart irrigation andpest detection using IoT. This system includes IoT, GSM, pest etc this system process initializes the poweris supplied to GSM then check the moisture level if the level is more than no need to watering and vice versa. initialize the after the process is completed it will go initialize state and process will stop

***S. K. Abdullah "Programing and Implementation of Wireless Monitoring Automatic Control System for Irrigation Greenhouse using ATMEGA328P-PU-AVR Microcontroller."* [8]**

Author Designs a system for monitoring and which depend on the microcontroller ATMEGA328PPU. The system works with two cases, in the case of a lack of water into the soil or runs the cooling fan in the case of high temperature and humidity around the plant. Use the Bluetooth device with a mobile device to control the temperature and humidity

Sahana D Gowda and Dr Minavati. "Smart irrigation system and pest detection using IoT."[9]

The author implements the system based on smart irrigation and pest detection using IoT. This system includes IoT, GSM, pest etc this system process initializes the power is supplied to GSM then check the moisture level if the level is more than no need to watering and vice versa. initialize the after the process is completed it will go initialize state and process will stop

***Devika CM, Kartika Bose and Vijayalakshmi S," Automatic plant irrigation system using Arduino."*[10]**

This paper is discussed about automatic plant irrigation system operated based on moisture content in soil by voltage division rule . in this system at mega 328 is used which programmed in such a way that for 0 it sense that fully wet condition and for 1023 it senses dry condition .by detecting these two value we can predict that whether the pump is turned an on or off. This system also used atmega 328 i.e Arduino UNO and moisture sensors.

III. AIM AND OBJECTIVES

The system goal and aim are to make an automatic watering system is based on a microcontroller, moisture sensors sense placed in the soil to check the dryness and wetness .relay and pump also used in the system to water the plants at ay time.

Objectives of the system:

- Make an automatic control system for watering the plants.
- System controlled by using moisture sensor, relay module and the Arduino.
- Check the moisture contain in the soil, by referring moisture sensor signal Arduino start to work.
- All system will be automatically controlled by using microcontroller.

IV. BLOCK DIAGRAM

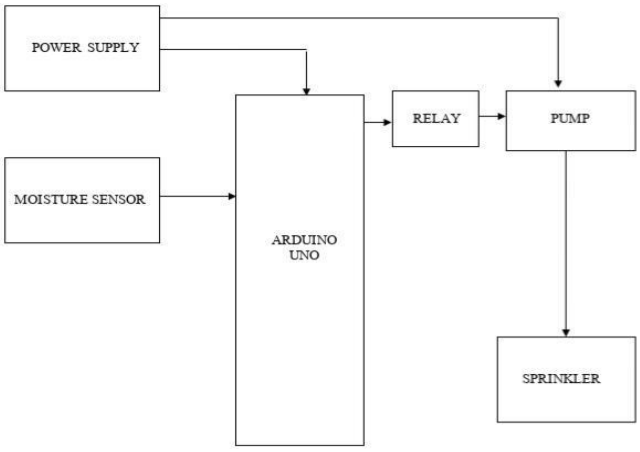

Fig No 1. Block Diagram

V. SOFTWARE AND HARDWARE PLATFORM

✓ Hardware for the project:

Soil moisture sensor, power supply, Relay, Resistor, pipe, jumper, sprinkler hub Motor.

✓ Software for the project: Arduino UNO (C Programming)

© Copyright: All rights reserved.

VI. TECHNICAL APPRAISAL OF PROJECT

A. Methodology

In this project, we can use a microcontroller which is Arduino. Soil moisture sensor and relay module are connected to Arduino UNO board through connecting wires and breadboard, only in this section connections are provided. Soil moisture sensor will sense the data will be transferred to Arduino. A threshold value has been set, both positive and negative, so that whenever the sensor measured value crosses the predefined threshold value the motor will be switch on/off automatically.

B. Planning

Analysis of the situation and the exact problem faced through discussions with the project guide.

We will use different technologies in the system.

We can implement the project with the help of our guide and the specification of the program were decided by the guide.

Use of moisture sensor to interface the computer and embedded system meant for process and control.

Testing and development still underway to enhance the user interface.

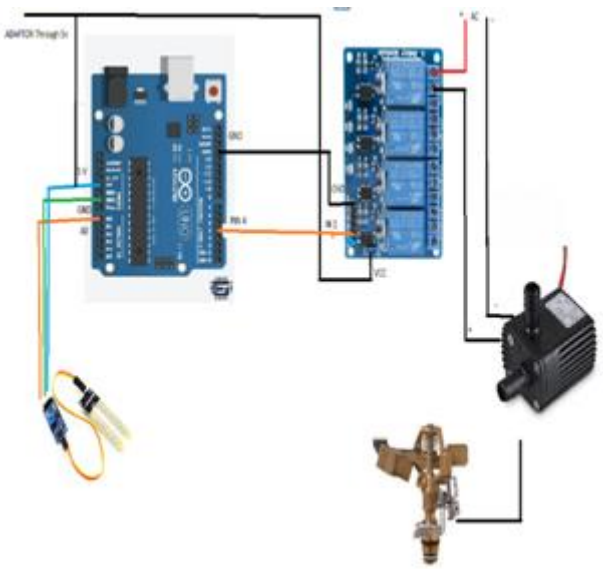

Fig No 2. Schematic diagram of project

C. Working Methodology

This project is based on an automatic sprinkler watering system. The automatic system consists of two main parts, the first is the relay module and the second is the watering pump. The relay work as a electric switch which is automatically operate. Relay uses an electromagnet to operate the switch from OFF to ON or ON to OFF.

All the hardware will be connected to an Arduino board, which is the microcontroller that use to control all the hardware attached to it.

The hardware includes the Arduino board, moisture sensor, pump, and relay module. This project is a complete example used for daily life. In this system, the centre is an Arduino board All requirement parts are connected to atmega 328. The soil moisture sensor senses moisture level in the soil and is transferred the data to the Arduino board after that process is dependent on it.

Electric signal control by relay switch that passes through the water pump. Arduino received signal from the moisture sensor. When the moisture level is a negative value, the Arduino UNO board sends a signal to the relay module. Then the relay module gets automatically open the path for the electricity to pass through the water pump to water the plant. After the moisture sensor detects sufficient water in the soil, the relay will stop as well as the water pump will be stopped immediately.

D. Flow Chart

The flow chart indicates the process of the system. All process controlled by using a laptop application. This is a very simple structure for an irrigation system. For the Arduino format reading

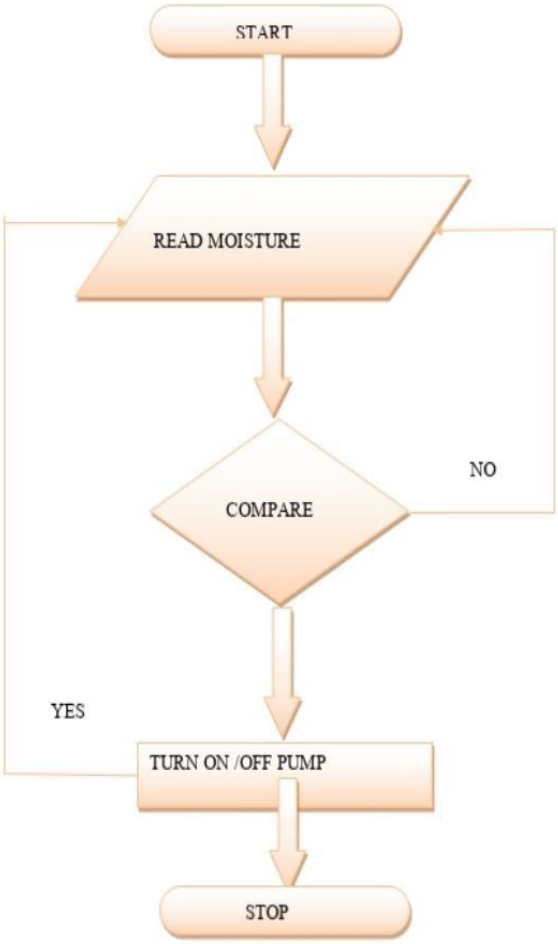

Fig No 3. Flow chart of the Project

Related work indicated in the flow chart step by step. Firstly the process of the system will start then the moisture sensor senses the dryness and wetness of soil after comparing the value Arduino trigger the motor on/off. Lastly system process will be stopped.

© Copyright: All rights reserved.

VII. SPECIFICATION

- ✓ This system saves water and improves the growth of plants.
- ✓ Easy to maintain and handling.
- ✓ Time-saving process.
- ✓ It operates night time also evaporation of water is less than a day.
- ✓ The process is started and stop as per requirement

Fig No 4. Circuit of the project

Fig No 5. Actual setup of the project

VIII. OBSERVATIONS

To reduce waste of water nowadays irrigation system is used. To reduce human efforts and make work easy we make the system automatically. When watering plants manually we required lots of water as compared to irrigation system based on Arduino using. By observing the system if we use Arduino based irrigation system the right amount of water is provided to plants growth of plants are healthy.

IX. RESULT

This is small model of automatic plant sprinkler irrigation. This system is tested in two soil types one is dry and another is wet. The moisture sensor senses the dryness in soil and wetness in soil. When the dry the condition occurs the pump will start, then the requirement of water is more for the proper growth of plants and in wet soil, the pump would not work then the soil does not need any water hence this project will conserve water during irrigation.

Moisture in soil	Relay Switch	Pump
wetness	OFF	OFF
Dryness	ON	ON

Fig No 6. Table of the Project Result

X. CONCLUSION

Thus the "Automated sprinkler irrigation system based on soil moisture using Arduino" has been designed and tested successfully. It has been developed by different features of all the hardware components used. It is showing a pin diagram of the project. Thus, the Arduino Based Automatic sprinkler irrigation System has been designed and tested successfully Function of the system has been automatic.

The moisture sensors measure the moisture level of the soil. If the moisture level is going to be below the limit level, the moisture sensor sends the signal to the Arduino then the Water Pump turn ON and supply the water to that plant using the Rotating Platform/Sprinkler. When the moisture level is reached positive value, then the system has stopped it means the water pump is turned OFF. Thus, the functionality of the whole system has been tested successfully.

REFERENCE

1. Subhash Ghosh, Sumaiya they, Kanchana wani, Kunal mahatre, "smart drip irrigation system using the cloud, Android and data mining".
   2016 IEEE International Conference on Advances in Electronics, Communication and Computer Technology (ICAECCT)
   Rajarshi Shahu College of Engineering, Pune India. Dec 2-3, 2016
2. Abhinav Rajpal, Sumit Jain, Nistha Khare and Anil Kumar Shukla, "Microcontroller based Automatic Irrigation System with Moisture Sensors", Proceedings of the International Conference on Science and Engineering, 2011, pp. 94-96
3. Md. Wasi-ur-Rahman, Mohammad Tanvir Rahman, Tare Hasan Khan and S.M. LutfulKabir,(2009)"Design of an Intelligent SMS based Remote Metering System",Proceedings of the IEEE International Conference on Information and Automation pp. 1040-1043
4. Y. Qiu and G. Meng, "The Effect of Water Saving and Production Increment by Drip Irrigation Schedules," 2013 Third International Conference on Intelligent System Design and Engineering Applications, Hong Kong, 2013, pp. 1437-1441. Doi: 10.1109/ISDEA.2012.343
5. S. K. Abdullah and R. F. Chisab, "Programing and Implementation of Wireless Monitoring Automatic Control System for Irrigation Greenhouse using ATMEGA328P-PU-AVR Microcontroller," J. Univ. Kerbala, vol. 15, no. 4, pp. 302–311, 2017.
6. Shriya Thawali et.al," Design and Manufacturing of Robot for Digging and Seeding in Agriculture", International Conference on Ideas, Impact and Innovation in Mechanical Engineering (ICIIIME 2017) ISSN: 2321-8169 Volume: 5 Issue:6
7. Sahana D Gowda, Dr Minavati. "Smartirrigation system and pest detection using IoT."IJCMC.Vol 7.Issue5,may2018.
8. Devika CM,Kartika Bose, Vijayalakshmi S," Automatic plant irrigation system using Arduino." IEEE international conference on circuit and system (ICCS2017).

© Copyright: All rights reserved.

9. Kriti Taneja,Amit Bhatia, "automatic irrigation system using Arduino." International conference on intelligent computing and control system (ICICCS 2017)
10. Ipin prasoja, Andino maseleno, Omar tonne," Design of Automatic watering system based on aurdino." Journal of robotics and control (JRC) vol 1March 2020.

AUTHORS PROFILE

Mr. G. M. Barbade, is lecturer in the department of electrical engineering at the Government Polytechnic Nanded. He graduated From VJIT in Mumbai with a masters degree in power systems. He has two years of professional experience in the industrial sector and also he worked for a year in a research organisation. In this project is involved as a mentor, he help to ensure that connections and accurate system configuration for load the control module.

Miss. Vasudha Ganesh Mahajan, is in student of 3rd year Electrical Engineering at the Government Polytechnic, Nanded. Strength gadget programming , creative and permit energy device and energy machine are only a few to research subjects. Because this is her first research project, this is my first possibility to join with IJMM lattice technology via a research study on " Automatic sprinkler system using arduino" to work for a year and this undertaking making circuit and checking out performance and correct use of additives utilised in this creation as well as fabrication of any model

Miss. Pasarge Sanika Shivraj, is in student of 3rd year Electrical Engineering at Government Polytechnic, Nanded. She labored in growing new technologies and used is hobby in microprocessor and microcontroller digital control device this task gave her the possibility to make a vast contribution to a modern studies working of a year and contributing as circuit assembly , as well as making the general connection and designing the module. This is her first studies task, she has not but published whatever

Miss. Shinde Sandhya Bharat, is in student of 3rd year Electrical Engineering at Government Polytechnic Nanded. She worked as a member of a year collecting the components and statistics for the "Automatic sprinkler System using aurdino". She appeared again at previous reports to look how tricky the family members where, as welll as evaluating content statistics for reference to make the version more efficient. I collect initial material which include research article for reference and execute required responsibility even as operating in the institution similarly there was a future work that had to be performed my first opportunity to publish the paper

© Copyright: All rights reserved.