Indian Journal of Data Communication and Networking (IJDCN)
ISSN: 2582-760X (Online), Volume-1 Issue-3, June 2021

Design and Implementation of a Efficient Router using X Y Algorithm

Geethanjali N, Rekha K.R

Abstract*: The engineering for on chip network configuration utilizing dynamic reconfiguration is an answer for Communication Interfaces, Chip cost, Quality of Service, ensure adaptability of the organization. The proposed engineering powerfully arrange itself concerning Hardware Modules like switches, Switch based packet , information to a packet size with changing the correspondence situation and its prerequisites on run time. The NOC Architecture assumes urgent part while planning correspondence frameworks intended for SOC. The NOC engineering be better over traditional transport, mutual transport plan , cross bar interconnection design intended for on chip organizations. In a greater part of the NO C engineering contains lattice, torus or different geographies to plan solid switch. In any case, the greater part of the plans are neglects to advance a Quality of Service, blocking issues, cost, Chip as well as mostly plan throughput, region transparency with inactivity. Proposed plan we are planning a reconfigurable switch for network on chip plan that improve the correspondence performance. The proposed configuration dodges the restrictions of transport based interconnection plans which are frequently applied in part progressively reconfigurable FPGA plans. . With the assistance of this switch plan we can accomplish low inactivity and high information throughput.

***Keywords*: Network On Chip, Router, System On Chip, Multiplexer.**

I. INTRODUCTION

These days there is a gigantic expansion in requests for NoCs based engineering as they are effectively associated with quantities of processors framing many center processor framework which is quicker in performing task when contrasted with single center processor framework. NoC has likewise become well known as a result of their similarity and simple to utilize structure which is very confounded for different procedures like worldwide shared transport approach. The main factor that influences different boundaries of NoC like energy effectiveness, execution, territory, dormancy and so on is the manner in which the hubs are characterized and are set in NoC design for processor.

associations. Because of the plan straightforwardness and customary utilize 2D cross section geography is the one which is most broadly utilized for creating NoC. However, because of high expanding in rush hour gridlock and the sky is the limit from there and more center getting associated with the NoC 2D lattice geography is getting difficult opportunity to defeat of the significant difficulties. For instance let there be a proficiently planned ping application that needs a correspondence from one processor to other which isn't associated with adjoining hub this makes a processor to go about as a steering processor to set up a static interconnection engineering and middle switch as unique switch based NoC. In the present circumstance the force utilization of the general NoC will increment simultaneously inactivity will likewise go high bringing about enormous deferral in conveyance of the bundle at the predetermined processor this is because of the expanded quantities of switches and directing processors. In different use of homogenous multiprocessors correspondence is frequently to a great extent restricted this lead to new issue of nearby planning blockage. Previously mentioned issue has a potential arrangement, simply expanding the quantity of associations with the hubs. This won't just conquer the issue however it will likewise address the issue of high force utilization and high territory usage. This has functioned as an inspiration for us to build up another design for the hub with more quantities of nearby associations and fabricate another lattice network utilizing similar hubs. a total advancement a NoC design on FPGA utilizing altered XY directing calculation utilizing the proposed hub and furthermore executed plan to defeat stop causing clog in the organization.

II. LITERATURE SURVEY

NOC have arisen since a promising worldview designed for planning adaptable correspondence design for Systems-on-Chips . In any case, NOCs intended in the direction to satisfy data transmission prerequisites linking the centers to a SOC used for a specific arrangement of successfully running applications might be there exceptionally imperfect for an additional arrangement of uses. The specific circumstance, techniques that be able to prompt flexibility improvements of starting NOC plans to varying working conditions, forced with factor sets of a executed a genuine application to a every second on schedule, are vital for planning serious NOCs a mechanical SOC.

The present work, reconfigurable NOC system dependent taking place a incomplete powerful reconfiguration abilities of FPGAs. The proposed new NOC system can powerfully make/erase express outline between SOC parts and perform run-time NOC geography in addition to steering table the reconfigurations towards deal with interconnection clog, by an exceptionally restricted presentation overhead. Besides,

Manuscript received on March 31, 2021.
Revised Manuscript received on April 12, 2021.
Manuscript published on June 10, 2021.

Geethanjali.N, Research Scholar, SJBIT Research Center, Bengaluru (Karnataka), India. E-mail: geethanjaligowda167@gmail.com

Dr. Rekha K.R, Professor, Department of ECE, SJBIT Research Center, Bengaluru (Karnataka), India. E-mail: rekha.sjbit@gmail.com

© The Authors. Published by Lattice Science Publication (LSP). This is an open access article under the CC BY-NC-ND license (http://creativecommons.org/licenses/by-nc-nd/4.0/)

it show that in our trial that results a expansion of unique reconfiguration abilities to essential NOCs utilizing our structure just suggests an exceptionally restricted zone overhead (around 10% by and large) as for the underlying NOC plans; accordingly, it can bring incredible advantages when contrasted with customary non-reconfigurable NOC configuration approaches for most pessimistic scenario data transfer capacity necessities in SOCs with numerous potential arrangements of running applications[1].

Because of a covered methodology, NOC be a promise correspondence spine in a field of a varied progressively reconfigurable frameworks. The proposed work in FPGA design talked about designed NOC is an extra undeniable stage directing asset. Rather than carrying out on a chip interconnection by important reconfigurable assets, on top of this engineering, cost of a proficient statically , powerfully reconfigurable frameworks can be there constructed. Idea of a such a FPGA investigated by methods for a theoretical System C model. In this model it executes a NoC as well as licenses a cover based unique reconfiguration. It will be present appeared, this methodology propels a exploration of a working framework support for dynamic reconfiguration in another way[2].

On-chip micro networks, planned with a layered philosophy, will address the unmistakable difficulties of giving practically right, solid activity of communicating situation on-chip segments. A framework on chip (SoC) can give an incorporated answer for testing plan issues in the broadcast communications, mixed media, and purchaser hardware spaces. A significant part of the advancement in these fields relies on the fashioners' capacity to consider complex electronic motors under solid chance to-showcase pressure. Achievement will require utilizing proper plan and interaction advances, just as interconnecting existing parts dependably in a fitting and-play style. Zeroing in on utilizing probabilistic measurements, for example, normal qualities or fluctuation to evaluate plan targets, for example, execution and force will prompt a significant change in SoC plan systems. Generally speaking, these plans will be founded on both deterministic and stochastic models. Making complex SoCs requires a measured, segment based way to deal with both equipment and programming plan. In spite of various difficulties, the creators accept that engineers will tackle the issues of planning SoC organizations. Simultaneously, they accept that a layered micronetwork plan strategy will probably be the lone way to dominating the intricacy of future SoC designs[3].

The Proposed work is concentrated assessment of a united plan designed for NOC. Mainly , they inspect a link of a collective NoC allocator, which can be achieved with the lock instrument need reviving involving the area with overall appointed authorities. Plans and executions of three sans interlock joined allocators are obtainable in a detail. Their is a cost, fundamental way, similarly a association stage execution be shown reliant on 65 nm technology of standard cell [4].

NOC is another perspective in the direction of to the interconnections to inside the SOC. By a headways achieve in joined circuit creating convenient to have be tries a design monstrous proportions association on the chip to achieve more powerful including upgraded chip. An unrivaled controlling computation can improve the presentation of a NOC. X Y directing estimation is the scattered a deterministic figuring. Odd-Even coordinating count is passed on flexible guiding estimation with stop free limit. Every NOC have to satisfy show essentials like high throughput ,low latency also low association power. Now we showed the collision of a traffic load minor takeoff from ordinary idleness, typical throughput and supreme association power for a two controlling computations XY and OE 3×3 2-dimensional grid topography. Proliferations be performed on A NIRGAM NoC test framework version 2.1 for reliable digit rate (CBR) traffic condition. The proliferation results contain all around typical inactivity ,ordinary throughput and hard and fast organization power . Execution estimations is resolved for a both controlling figurings also compared[5].

Many-center processors will have many preparing centers with an organization on-chip (NoC) that gives admittance to shared assets like principle memory and on-chip stores. Nonetheless, locally-reasonable mediation in multi-stage NoC can prompt internationally unreasonable admittance to shared assets and effect framework level execution relying upon where each undertaking is actually positioned. The work, proposed is an intervention towards a give balance of a administration (EoS) in a arrange in addition to offer help designed for area unaware errand position. We propose utilizing probabilistic assertion joined with a distance of a based loads to accomplish EOS with defeat a limit to a cooperative authority. Notwithstanding, the intricacy of probabilistic mediation brings about high zone and long idleness which adversely impacts execution. To lessen the equipment intricacy, we propose a mixture mediator that switches between a basic referee at low burden and an intricate judge to a high burden. The cross breed mediator is empowered by the perception that intervention just effects the general exhibition and worldwide reasonableness to a high burden. The assess our discretion conspire with manufactured traffic examples and GPGPU benchmarks. Our outcomes shows that half and half referee that consolidates cooperative judge with probabilistic distance-based mediation lessens execution variety as assignment situation is differed and furthermore improves normal IPC[6].

The creating reliance on insightful properties uncovered SOC to various safety shortcomings also it is raise a consistently expanding number of concerns. All the while, with the energetic extension on chip thickness and significant scale of feature size, The current billion-semiconductor chips plans familiarize additional challenge with amassing lack free chip. The proposed consolidated runtime answer intended for both security also variation to inside disappointment of field-programmable entryway displays (FPGA)- based SoCs through mechanized imprints, live checking, flexible coordinating, and midway reconfiguration maintained by a in house made organization on a chip, X-Network. X-Network diminishes a extent a required switches instead of taking care of parts with a better execution, also even more basically, offers a additional flexibility than customary associations urge variation to non-basic disappointment and security plans. A multiplexed Montgomery disconnected enlargement designing is used to accelerate the Rivest Shamir Adleman estimation.

© Copyright: All rights reserved.

A Arrangement have been completed as well as taken a stab at a Xilinx Virtex-6 FPGA headway board. Exploratory results show a whether or not just before 20% of the associations in the association be broken, in this reconfigurable plan with estimation sort out some way to course distributes such a faults, and pass on them near their complaints in a reasonably low a latency. Not at all like standard issue receptive procedures that for the most part require resource overabundance, our arrangement doesn't achieve enormous zone or a speed corruption. A Resource overhead for a both security with inadequacy indulgent type is around 10% of more question tables[7].

The propose embeddings NOC of a FPGAs towards to a system of level correspondence. Among various benefits , It can decrease the current trial of partner of a FPGA surface to a quick memory interfaces and also I/O, which is a huge portion of a FPGA plan . the propsed work is of mixed with hard introduced NOC add just similar to 1% zone for a tremendous FPGA which can run with a much speedier than a middle reasoning, in this way remaining mindful of a speed of memory interfaces and also I/O and. low down power assessment, per NOC section, show with the aim of switches consume 14× less power when executed firm differentiated with sensitive, and whether rigid or fragile mainly of a switch's power is obsessive in a data modules for buffering. For a complete structures, hard NOC consume < 6% of FPGA dynamic power spending intend to help 100 GB/s of correspondence bandwidth. As We track down that, dependent upon plan choice, hard NOC consumes 4.5-10.4 mJ of energy per a gigabyte of data moved. Incredibly, this is commensurate with energy efficiency of a most un-troublesome standard interconnect on a FPGA-sensitive feature point joins require a 4.7 mJ/GB. While differentiating a hard NOC against sensitive vehicles that are as of now used to a interconnection, we also track down that standard structure is 4× more unobtrusive, with a uses 23% less of a energy when executed using a hard NOC in spite of the way that it is simply 43% utilized[8].

The proposed paper, is a multi-objective, immovable quality, correspondence energy, execution, co improvement model orchestrated arranging move towards a proposed in the direction of find ideal mapping when a application be arranged on towards NOC based reconfigurable constructions. A co progression model, described as a reliability efficiency model, is made to survey overall steady quality capability of an arranging. In a REM, resolute quality capability a described since the trustworthiness advantage at a comparable energy inertia thing. Considering REM, an arranging approach, suggested as need and pay factor arranged bound also branch (PCBB), familiar with figure out a top arranging plan. Two more techniques, need task in addition to compensation factor use, gotten to create a trade off stuck between search adequacy with exactness. Exploratory results show that a proposed approach have three critical responsibilities appeared differently in relation to bleeding edge moves close. (1) PCBB is especially gainful in a finding best mappings, with a 3x and 720x speed up diverged from branch and bound and recreated hardening . A (2) PCBB can capably to remap after a reconfiguration of designing. (3) General quantitative to evaluation for constancy, correspondence energy with execution are also made separately before consolidated into united model REM, however other equivalent models simply unending stock of them quantitatively[9].

Multicore structures experience the evil impacts of high focus to-focus correspondence torpidity basically due to a store's dynamic direct. study propose that library approach be able to be valuable to lessen correspondence lethargy with taking care of a put away square information. Late assessments also show that a far off switch can help to decrease correspondence latency in a multicore plans. In the proposed inventory based multicore plan by distant changes to a restrict correspondence inactivity. We reenact structures by network , far off association on-chip (WNoC), the proposed index based plan by way of distant switches. According to a exploratory results, this proposed configuration beats the WNoC with the cross section structures. It is seen that proposed designing aides decrease a correspondence delay by up to 15.71 percent to the hard and fast force usage by up to 67.58 percent when differentiated and the cross section plan. Likewise, the proposed configuration helps to decrease a correspondence delay with up to 10.00 percent in addition to the hard and fast force usage with up to a 58.10 percent at what time differentiated and the WNoC designing. This a result of the way that can proposed vault based segment reduces a amount of focus to-focus correspondence and distant switches help decline unquestionably the quantity of hops[10].

Continuous examination of SDN intended for MCSoCs, show higher organization suppleness and decreased real multifaceted design diverged from other runtime correspondence the load up. In SDN, there is an item SDN Controller that plans nonexclusive switches . A appointment of SDN makes a way establishment of a programmable and understood, according to a unmistakable association methodologies, similar to low power, QOS, variation to non-basic disappointment. It can also have a that is a similarly possible to change a way to establishment techniques at a runtime without a need to overhaul the NOC. The Current works base on a proposing SDN structures, without basic framework of a portrays a methods expected to execute SDN keen on a Many-focus environment. Security is seen opening in SDN plans. toxic task could mastermind SDN switches also accept accountability for NOC. A responsibility of proposed work is to present primary also to secure SDN-SS, organizing the methods expected to help SDN in MCSOCs. This is a work moreover depicts the cycle between the hardware, working system, and customer's tasks. SDN-SS manages Multiple-Physical NOC, with one bundle trading subnet also a lot of circuit-trading subnet. A imagination of SDN-SS fuses (I) step by step structure portrayal keeping an eye on the stages expected to help an ensured SDN the heads; (ii) a safe SDN switch game plan show; (iii) show to change subnet at runtime.

Test outcomes show a design's ability to sidestep DOS also a Spoofing attacks a while presents a low SDN switch course of action overhead, contrasting up with 2% of an associated work of a delay and a little impact over a customer's task a communication[11].

© Copyright: All rights reserved.

Heterogeneous 3D System-on-Chips be a most of a promising arrangement perspective to join distinguishing plus figuring inside a lone chip. Phenomenal property a correspondence networks in a heterogeneous 3D SOCs is moving inactivity in addition to throughput in each layer.

As exhibited in a work, variance drastically spoils association execution. This contribute a coplan of coordinating figurings with switch microarchitecture to grants in the direction of beat a display limitations. To take apart a troubles of a heterogeneity: Technology-careful models be proposed intended for correspondence and likewise recognize layers in which packs are sent all the more sluggish. The correspondence models be accurate for a inaction moreover throughput under a zero weight. The development model has a domain screw up and an arranging misstep of under 7.4% for a various business propels as of 90 to 28nm. Second, we tell the best way to beat limitations of a heterogeneity by a proposing two novel guiding estimations considered ZXYZ and Z+(XY)Z-that improve torpidity by up to 6.5x appeared differently in relation to conventional estimation demand coordinating. Additionally, to a propose high vertical throughput switch microarchitecture so as to is changed as per the guiding counts with that totally crushes the constraints of all the more lethargic layers. We achieve an extended throughput of 2 to 4× appeared differently in relation to an ordinary switch. Thusly, the novel power of switches is decreased with up to 41.1% and achieve improved ripple idleness to 2.26× at minimal full scale switch an area costs some place in the scope of 2.1% and 10.4% for sensible progressions and application scenarios[12].

By extending the amount of focuses on a chip in previous decade, association on-chip development have be made to a address flexibility gives that can arise in a outstandingly mentioned multi-focus structures. Regardless, interconnection networks power extra gear overhead, for instance, switches, network interfaces, and extended power use. Power gating of the inert sections has been used in a some new investigation as promising response for a decrease a static power usage while its is a drawbacks, for instance, stir deferral and power overhead should be tended to fittingly. In is a compact, a probabilistic examination have been a coordinated to evaluate the PG capability coating theory setting as well as a control unit has been a proposed to manage a the rest signal affirmation to help sections subject to the assessment results. A reenactment results show a ordinary improvement of a static power saving of a about 40% stood out from unsuspecting 20% and 50 % in regards to a related works where it can overhaul the typical dormancy by about 20% a without tremendous impact on overall a throughput[13].

This paper propose a low region overhead and power successful unique reasoning semi deferral heartless sense-speaker half-support approach with quad-rail data encoding. Proposed quad-rail SAHB approach is engaged for area and energy-capable unconventional association on-chip switch plans. There are a three essential features in a proposed quad-rail SAHB approach. In any case, the quad-rail SAHB is planned to use four wires for picking four of ANoC switch direction, subsequently diminishing the amount of semiconductors and region overhead. Second, the quad-rail SAHB changes only a one out of a four wires for a 2-bit data multiplication, hereafter falling the amount of semiconductor switchings as well as dynamic power dispersal. Third, quad-rail SAHB submits to QDI rules, thusly the arranged ANoC switch incorporates high operational generosity toward measure voltage-temperature (PVT) assortments. Considering the 65-nm CMOS measure, we use the proposed quad-rail SAHB to complete and demonstrate a 18-piece ANoC switch plan. When a benchmarked against the twofold rail accomplice, proposed quad-rail SAHB ANoC switch kind a 32% more humble area and scatters half lower energy under comparative shocking operational force toward PVT assortments. When appeared differently in relation to the next uncovered ANoC switches, proposed a quad-rail SAHB ANoC switch is a one of the extraordinary operational strength, tiniest zone, as well as most energy-beneficial designs[14].

III. METHODOLOGY

The Dynamically Reconfigurable module for the most part comprises of Packet exchanging and NoC Design modules. The principle engineering as demonstrated in the figure 1.

First and foremost beneficiary module gets the information sequentially like FIFO and provides for RAM. The RAM stores the information in address areas. on the off chance that information is legitimate, analyzer examinations the information as parcel send it to the NoC Reconfigurable router is designed for NOC.

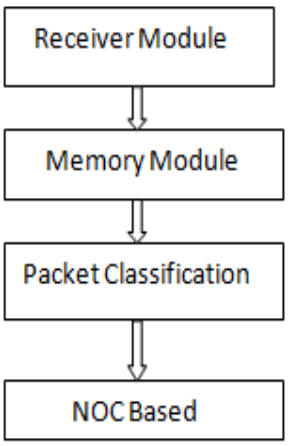

Fig. 1.Dynamically Reconfigurable Packet-Switched Network-on-Chip

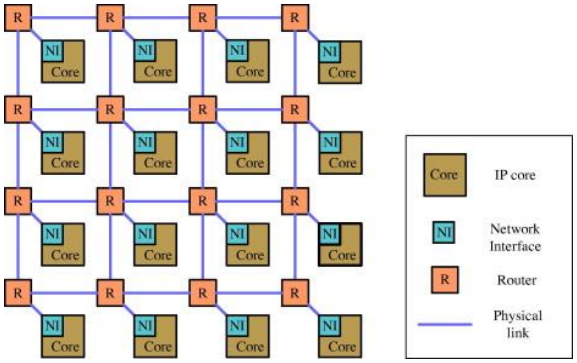

Fig. 2.Dynamically Reconfigurable Router connection on Network-on-Chip

Retrieval Number:100.1/ijdcn.B5009021221
DOI:10.54105/ijdcn.B5009.061321
Journal Website: www.ijdcn.latticescipub.com

Published By:
Lattice Science Publication
© Copyright: All rights reserved.

The Generally Reconfigurable Routing calculation is utilized to choose the parcels in some of the west, east, south as well as north headings. At this time we are utilizing X Y Routing calculation .The XY-calculation is a distributive deterministic steering calculation, which is a utilized to keep away from the organization clog issues and it sends the bundle either through y-pivot bearing or x-hub course. On the off chance that we utilize this deterministic calculation, it will give the traffic free organization to get better the high throughput, low inertness of a switch plan.

The proposed Design of a router is done using a verilog language & it's functional verification of it will be done using FPGA kit and design is verified using Xinlix ISE 13.4and Xilinx Spartan-6 FPGA is used for a functional verification ,power is reduced using power gating technique.

IV. RESULT AND DISCUSSION

Table- I: [REFRENCE 15] Design summary of NOC using a different FPGA 'S Spartan 3

Logic Utilization	XC3S4005 PQ208	5VLX110T-3 FF1136	7A100T-3 CSG324
Total No's Of Registers Slice	930	1224	910
Total No's Lut's Of Slice	1224	1338	998
Total No's Of Lut-Ff Pairs Used Fully	1702	1192	875
Total No's Of Bonded Iob's	562	562	485
Total No's Bufg/Bufgctrl's	1	1	1

By utilizing broadened x y calculation for steering NOC table 1 boundary will in any case be improved. Utilitarian confirmation will be done dependent on multiplication utilizing modelsim .

V. CONCLUSION

In this Paper, we are closing parcel exchanged NoC is chiefly utilized in on chip networks which progressively reconfigurable in nature. The fundamental motivation behind X Y Algorithm is utilized to plan switch will improve the correspondence between hubs. The outcomes are dissected and plan usage should be possible utilizing distinctive FPGA's. The cut use is improved when contrasted with ordinary NoC plan design.

REFERENCES

1. G *Vincenzo Rana, David Atienza, Marco Domenico Santambrogio*, "A Reconfigurable Network-on-Chip Architecture for Optimal Multi-Processor SoC Communication", 2008.
2. *Ronald Hecht, Stephan Kubisch, Andreas Herrholtz, Dirk Timmermann,* "dynamic reconfiguration with hardwired networks-on-chip on future FPGA'S", 2005.
3. L. Benini and G. De Micheli, "Networks on chips: a new SoC paradigm," Computer, vol. 35, p. 70-78, 2002.
4. Ye Lu, Changlin Chen, McCanny, J. , Sezer, S," Design of interlock-free combined allocators for Networks-on-Chip", IEEE International conference on SoC Conference (SoCC), page 358-363, Sep 2012.
5. Singh, J.K., Swain, A.K. , Reddy, T.N.K. , Mahapatra, K.K.," Performance evalulation of different routing algorithms in Network on Chip", IEEE Asia Pacific Conference on Postgraduate Research on Microelectronics and Electronics (PrimeAsia), 2013.
6. Gwangsun Kim, Lee, M.M.-J. , Kim, J., Lee, J.W., Abts, D., Marty, M." Low-Overhead Network-on-Chip Support for Location-Oblivious Task Placement" Computers, IEEE Transactions on Volume: 63 , Issue: 6, 2014.
7. TaimourWehbe; Xiaofang Wang Secure and Dependable NOC-Connected Systems on an FPGA Chip IEEE Transactions on Reliability Year: 2016, Volume: 65, Issue: 4 Pages: 1852 - 1863, IEEE Journals & Magazines
8. Mohamed S. Abdelfattah; Vaughn Betz"Power Analysis of Embedded NOCs on FPGAs and Comparison With Custom Buses"IEEE Transactions on Very Large Scale Integration (VLSI) SystemsYear: 2016, Volume: 24, Issue: 1Pages: 165 - 177, IEEE Journals & Magazines
9. Chen Wu; Chenchen Deng; Leibo Liu; Jie Han; Jiqiang Chen; Shouyi Yin; ShaojunWeiA Multi-Objective Model Oriented Mapping Approach for NOC-based Computing Systems IEEE Transactions on Parallel and Distributed Systems Year: 2017, Volume: 28, Issue: 3 Pages: 662 - 676, IEEE Journals &Magazines
10. Abu Asaduzzaman; Kishore K. Chidella; DivyaVardha"An Energy-Efficient Directory Based Multicore Architecture with Wireless Routers to Minimize the Communication Latency"IEEE Transactions on Parallel and Distributed SystemsYear: 2017, Volume: 28, Issue: 2Pages: 374 - 385IEEE Journals & Magazines
11. Marcelo Ruaro;Luciano L. Caimi;Fernando Gehm Moraes "A Systemic and Secure SDN Framework for NoC-Based Many-Cores" IEEE Access Year: 2020 | Volume: 8 | Journal Article | Publisher: IEEE
12. Jan Moritz Joseph;Lennart Bamberg;Dominik Ermel;Behnam Razi Perjikolaei;Anna Drewes;Alberto García-Ortiz;Thilo Pionteck "NoCs in Heterogeneous 3D SoCs: Co-Design of Routing Strategies and Microarchitectures" IEEE Access Year: 2019 | Volume: 7 | Journal Article | Publisher: IEEE
13. Nasim Nasirian;Reza Soosahabi;Magdy A. Bayoumi "Probabilistic Analysis of Power-Gating in Network-on-Chip Routers" Probabilistic Analysis of Power-Gating in Network-on-Chip Routers IEEE Transactions on Circuits and Systems II: Express Briefs Year: 2019 | Volume: 66, Issue: 2 | Journal Article | Publisher: IEEE
14. Weng-Geng Ho;Kwen-Siong Chong;Kyaw Zwa Lwin Ne;Bah-Hwee Gwee;Joseph S. Chang "Asynchronous-Logic QDI Quad-Rail Sense-Amplifier Half-Buffer Approach for NoC Router Design" IEEE Transactions on Very Large Scale Integration (VLSI) SystemsYear: 2018 | Volume: 26, Issue: 1 | Journal Article | Publisher: IEEE Cited by: Papers (1)
15. Shilpa K Gowda and Dr. Rekha K.R " Performance Analysis of Hexagonal Node Design For Packet-Switched NoC on FPGA" International Journal of Applied Engineering Research ISSN 0973-4562 Volume 12, Number 13 (2017) pp. 4004-4008

AUTHORS PROFILE

Geethanjali. N, Research scholar currently pursuing my Phd in SJBIT Research Center, Affiliated to VTU, M.tech in Dr AIT College, BE in Dr AIT Bengaluru
Email Id: geethanjaligowda167@gmail.com

Dr. Rekha K.R, presently working as professor in the department of ECE,SJBIT ,Bengaluru -60.She Obtained BE in electronics from SIT, Tumkur in 1995 ,ME from BMCE ,Bangalore ,and Phd in MGR university Chennai
Email Id: rekha.sjbit@gmail.com

© Copyright: All rights reserved.